Mazda 626 MX-6

1996 Body Electrical Troubleshooting Manual

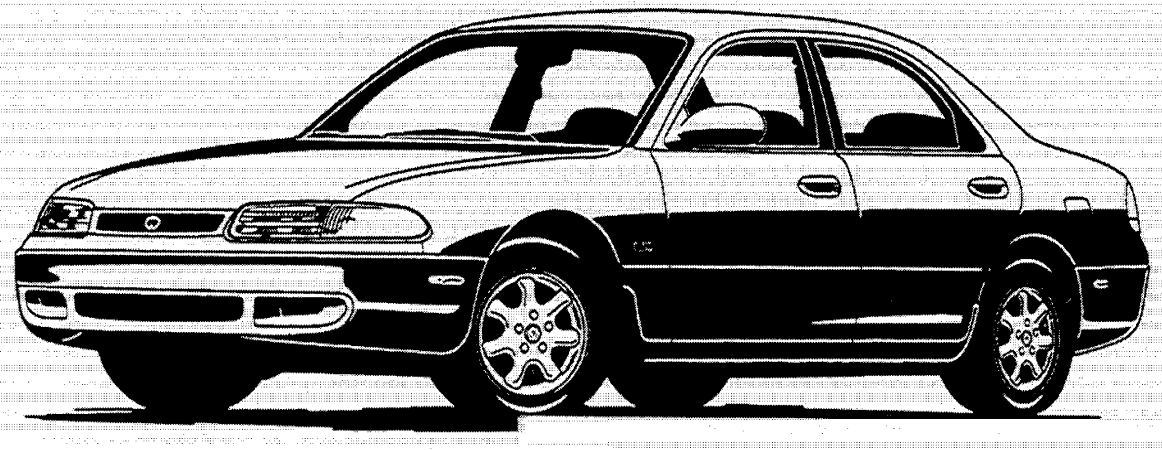

mazda

WARNING

Servicing a vehicle can be dangerous. If you have not received service-related training, the risks of injury and property damage increase. The recommended servicing procedures for the vehicle in this troubleshooting manual were developed with Mazda-trained technicians in mind. This manual may be useful to non-Mazda trained technicians, but a technician with our service-related training and experience will be at less risk when performing servicing operations. However, all users of this manual are expected to know general safety procedures.

This manual contains "Warnings" and "Cautions" applicable to risks not normally encountered in a general technician's experience. They should be followed to reduce the risk of injury and the risk that improper service or repair may damage the vehicle or render it unsafe. It is also important to understand that the "Warnings" and "Cautions" are not exhaustive. It is impossible to warn of all the hazardous consequences that might result from failure to follow the procedures.

The procedures recommended and described in this manual are effective methods of performing troubleshooting and repair. Some require tools specifically designed for a specific purpose. Nonrecommended procedures and tools should include consideration for safety of the technician and continued safe operation of the vehicle.

Parts should be replaced with genuine Mazda replacements parts, not parts of lesser quality. Use of a nonrecommended replacement part should include consideration for safety of the technician and continued safe operation of the vehicle.

VEHICLE IDENTIFICATION NUMBERS (VIN)

626

1YV GE22C*T5 500001 –
1YV GE22D*T5 500001 –

MX-6

1YV GE31C*T5 500001 –
1YV GE31D*T5 500001 –

1996 Mazda 626/MX-6 Body Electrical Troubleshooting Manual

FORWARD

For proper repair and maintenance, a thorough familiarization with this manual is important, and it should always be kept in a handy place for quick and easy reference. All the contents of this manual, including drawings and specifications, are the latest available at the time of printing. As modifications affecting repair or maintenance occur, relevant information supplementary to this volume will be made available at Mazda dealers. This manual should be kept up-to-date.

Mazda Motor Corporation reserves the right to alter the specifications and contents of this manual without obligation or advance notice.

WARRANTY

The manufacturer's warranty on Mazda vehicles and engines can be voided if improper service or repairs are performed by persons other than those at an Authorized Mazda Dealer.

Mazda Motor Corporation
Hiroshima, JAPAN

APPLICATION:
This manual is applicable to vehicles beginning with the Vehicle Identification Numbers (VIN) shown on the following page.

CONTENTS

PRINTED IN THE U.S.A.
FORM NO. 1493-10-95F
PART NO. 9999-95-084F-96

GENERAL INFORMATION

OUTLINE

CONTENTS

The Body Electrical Troubleshooting Manual is intended as an aid for repairing the body electrical systems of the vehicle. The manual is divided into 6 sections:

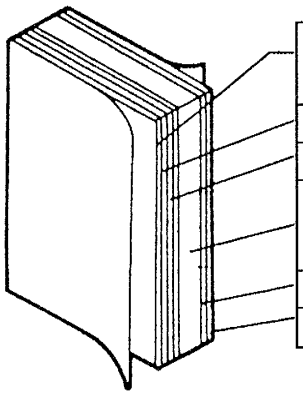

GI	General Information	Explains how to use the manual, use test equipment, check harnesses and connectors, and find trouble spots
Y	Ground Points	Shows ground routing to and from the battery
W	Electrical Wiring Schematic	Shows the circuit layout for the entire vehicle
C~T, Z	Individual system sections	Shows system operation, circuit and connector diagrams, component and connector locations, and troubleshooting and replacement procedures
X	Common Connectors	Shows common connectors throughout system
JB	Joint Box	Shows joint box connections and terminals

ADVISORY MESSAGES

You'll find several **Warnings**, **Cautions,** and **Notes** in this manual.

Warning

- **A Warning indicates a situation in which serious injury or death could result if the warning is ignored.**

Caution

- **A Caution indicates a situation in which damage to the vehicle could result if the caution is ignored.**

Note

- A **Note** provides additional information that will help you to complete a particular procedure.

BASIC FLOW OF TROUBLESHOOTING

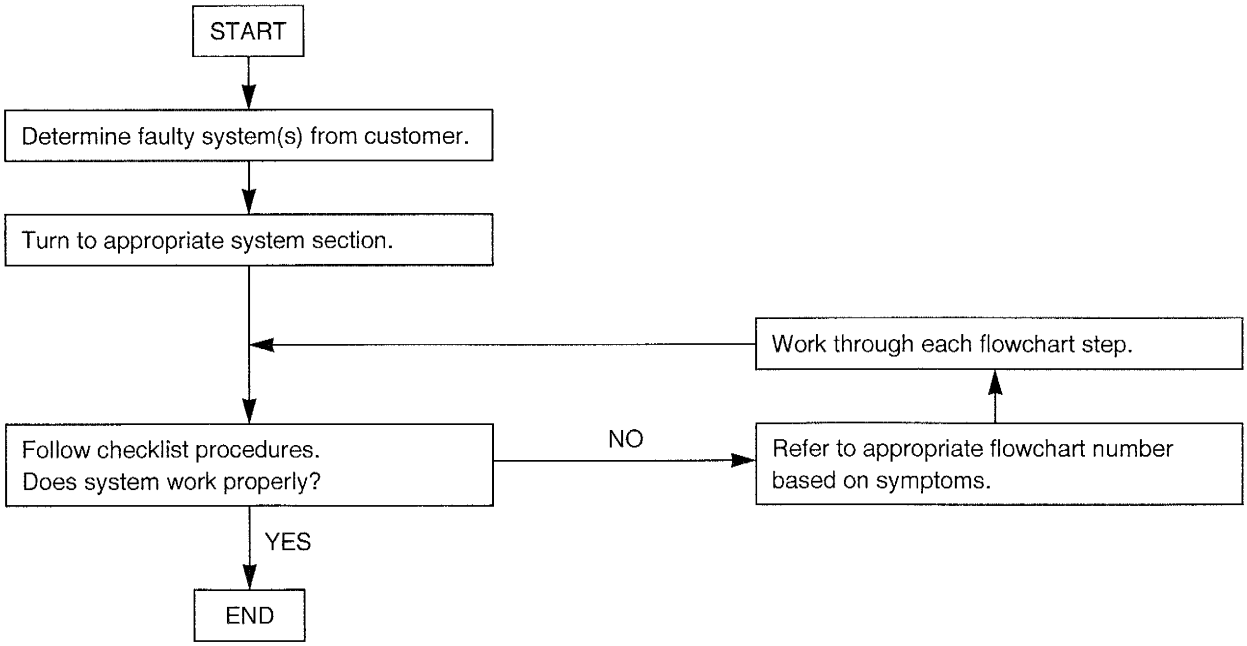

HOW TO READ THE DIAGRAMS

SYSTEM OPERATION

The system operation description shows how current flows and how the system operates.

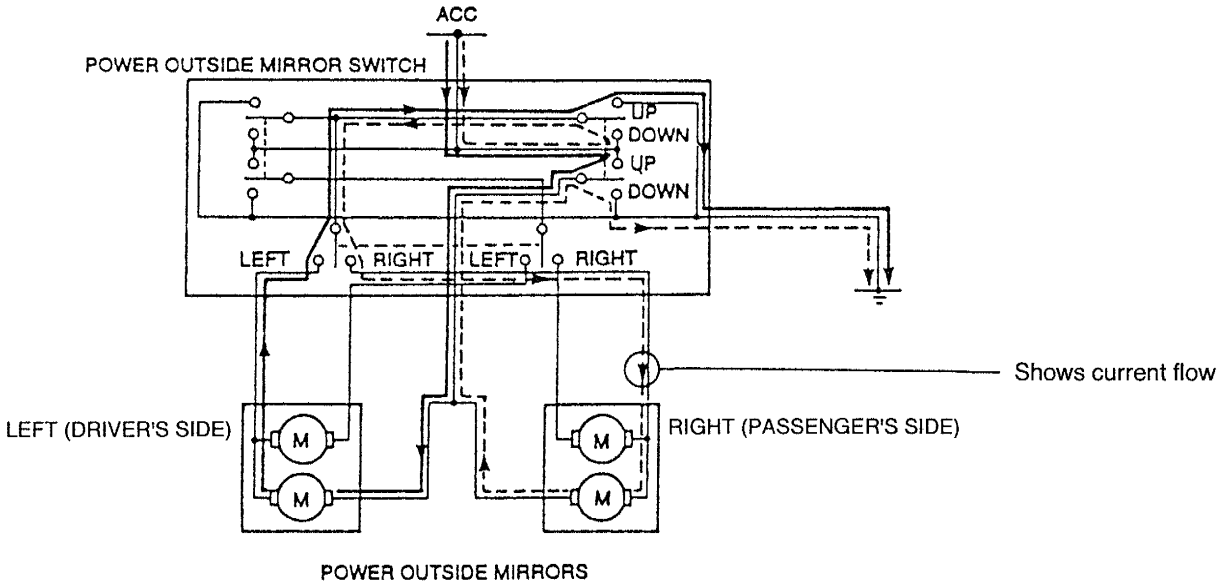

System Operation

1. Vertical adjustment

- When the selector switch is set to the left and the top of the power outside mirror switch is pressed with the ignition switch at ACC, current flows (solid line), the motor turns, and the left mirror glass moves upward. (Right mirror operation is similar.)
- When the selector switch is set to the right and the bottom of the power outside mirror switch is pressed with the ignition switch at ACC, current flows (broken line), the motor turns, and the right mirror glass moves downward. (Left mirror operation is similar.)

Explains how the system and its parts operate.

CIRCUIT DIAGRAM

This diagram shows the circuit layout for the system, from the power supply to ground, together with details of the circuit connectors. The power supply side is in the upper part of the diagram; the ground side is in the lower part. The diagram assumes the ignition switch is at OFF.

Wire Color

- Two-color wires are indicated as color/color.
  The first color is the base; the second is the stripe.

  B/W is a black wire with a white stripe.
- The letter in ( ) is the connector reference.

Current Flow

Current flows in the direction of the arrow.

Related Diagram

Indicates that the circuit continues on a related diagram.

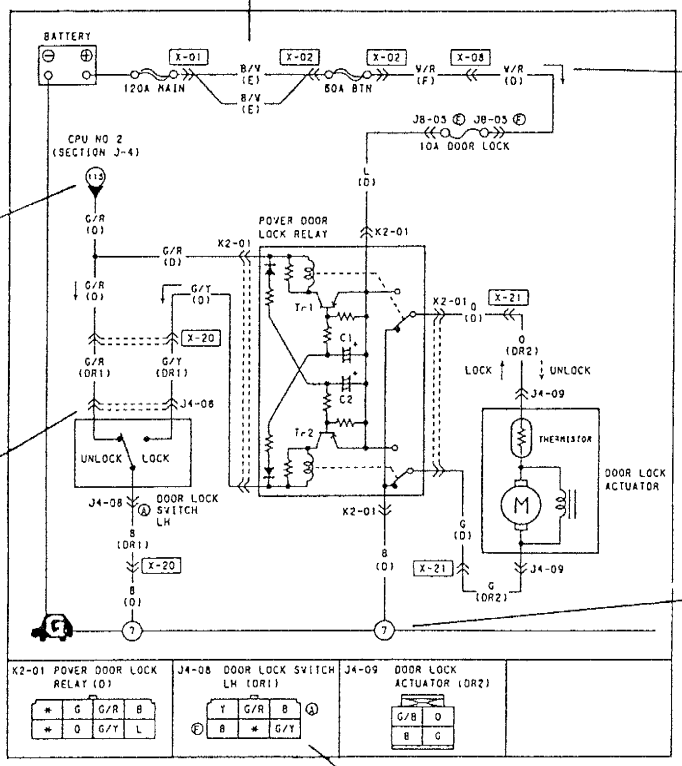

Ground

Indicates either a unit or harness ground. A number gives the location reference shown on "Connector Locations."

Connector Symbol

Two dashed lines indicate the same connector.

Circuit diagram symbol	Connector diagram symbol
Male	L/R
Female	L/R

Connector Diagram

Shows connectors from the harness side.
Unused terminals are indicated by *.

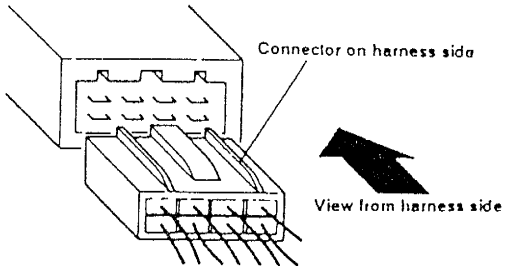

CONNECTOR LOCATIONS

These illustrations show the harness and connector layout of the circuit.

Component Connector

Indicates the component that is attached to the main harness connector.

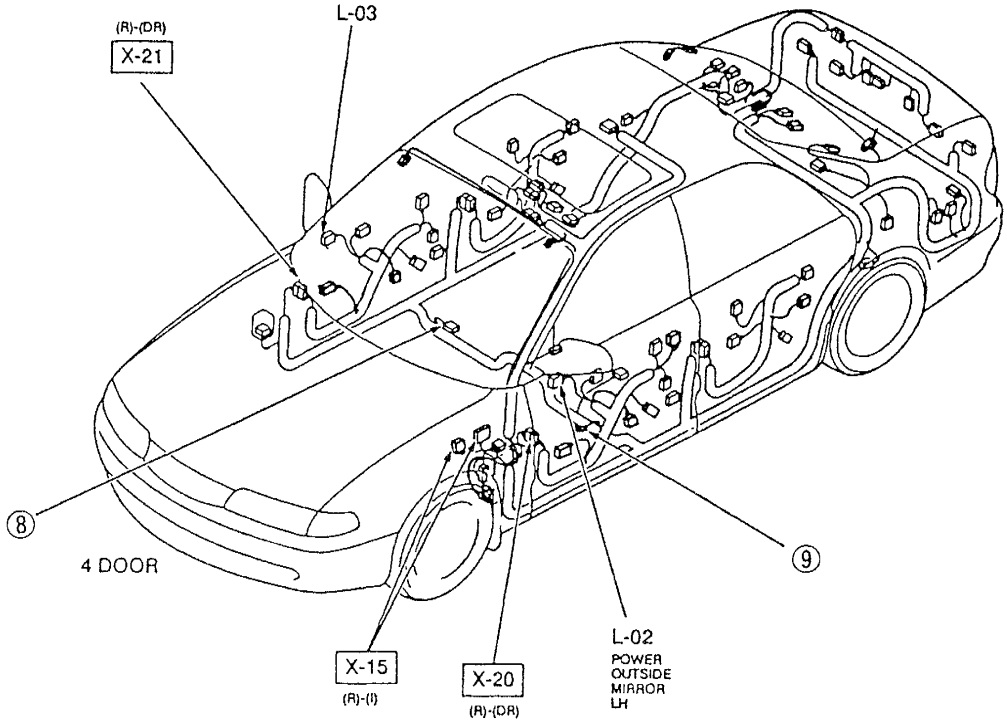

Ground

Corresponds to the ground number written on the circuit diagram.

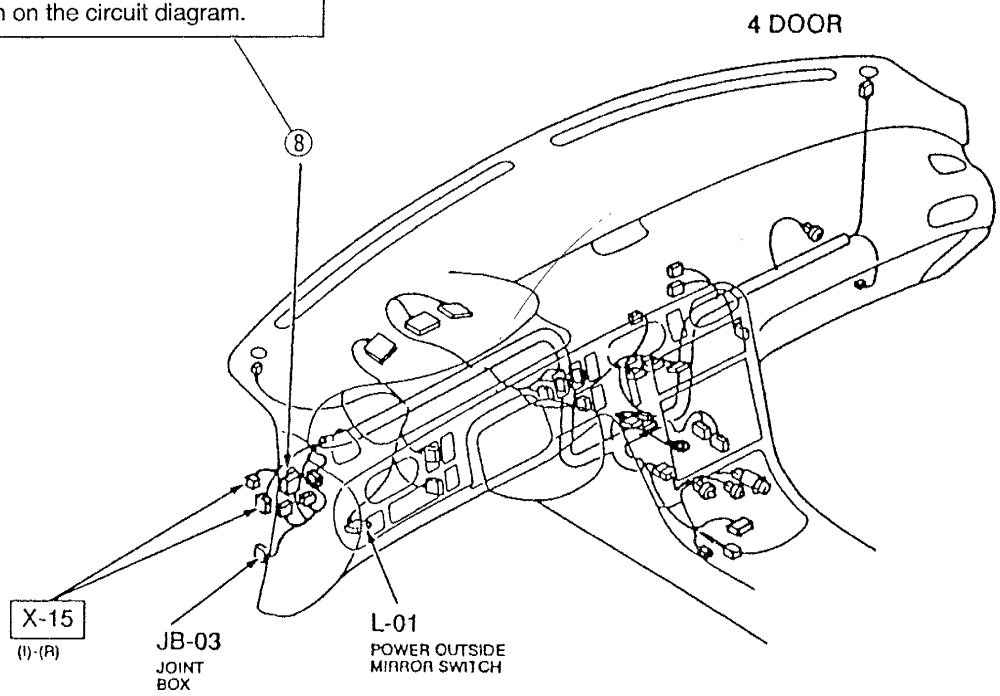

TROUBLESHOOTING FLOWCHARTS

The flowcharts outline the steps to be taken once symptoms of the problem have been defined.

How to determine the symptoms of the problem and where to refer for the troubleshooting procedure.

Checklist

	Procedure / Proper operation	Symptom	Flowchart No.
1	Operate rear wiper switch and verify that wiper operates.	Rear wiper does not operate	1
		Rear wiper continues operating after rear wiper switch is turned OFF	2
2	Turn OFF rear wiper switch during rear wiper operation, and verify that wiper stops at park position.	Autostop operation does not work (wiper immediately stops when rear wiper switch is turned OFF)	3
3	Operate rear washer switch and verify that washer operates.	Rear washer does not operate	4

Flowchart corresponding to the symptom

Flowchart No.1	Symptom	Rear wiper does not operate

Possible causes of the problem

Possible cause
- REAR WIPER fuse burnt
- Damaged rear wiper motor
- Damaged CPU No.1
- Damaged rear wiper and washer switch
- Open circuit in wiring harness
- Poor connection of connector

Part location and testing method illustration

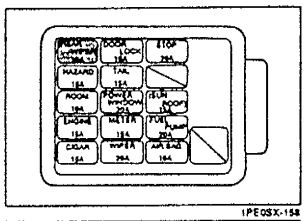

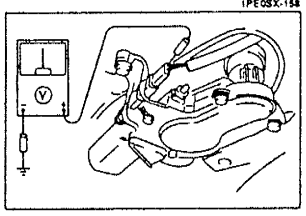

Troubleshooting procedure

Step 1
Check the REAR WIPER 10A fuse in the fuse block.

Vs: Battery voltage

Fuse	Action
OK	Go to Step 2
Burnt	Replace fuse after checking and repairing wiring harness

Step 2
1. Remove the rear hatch lower trim. (Refer to the 1993 RX-7 Workshop Manual, Section S.)
2. Turn the ignition switch ON.
3. Measure the voltage at terminal wire (L/G) of the rear wiper motor harness connector.

Vs: Battery voltage

Voltage	Action
Vs	Go to Step 3
Others	Repair wiring harness (Fuse block—Rear wiper motor)

REPLACEMENT PROCEDURES

These illustrations show how to remove and install or disassemble and assemble the components of a system.

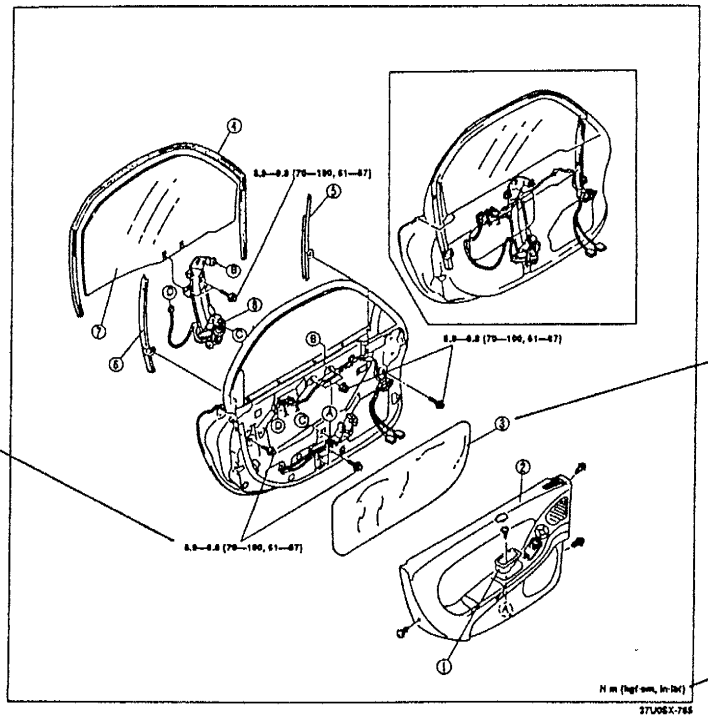

Tightening torque specification

Step number in the removal or disassembly order

Tightening torque unit

Removal or disassembly order

1. Inner handle cover
2. Door trim
3. Door screen
4. Glass run channel
5. Glass guide A
6. Glass guide B
7. Door glass
8. Power window regulator
   Inspection ..... page K1–13

GROUND POINTS

This section shows the ground points of the vehicle's main harness.

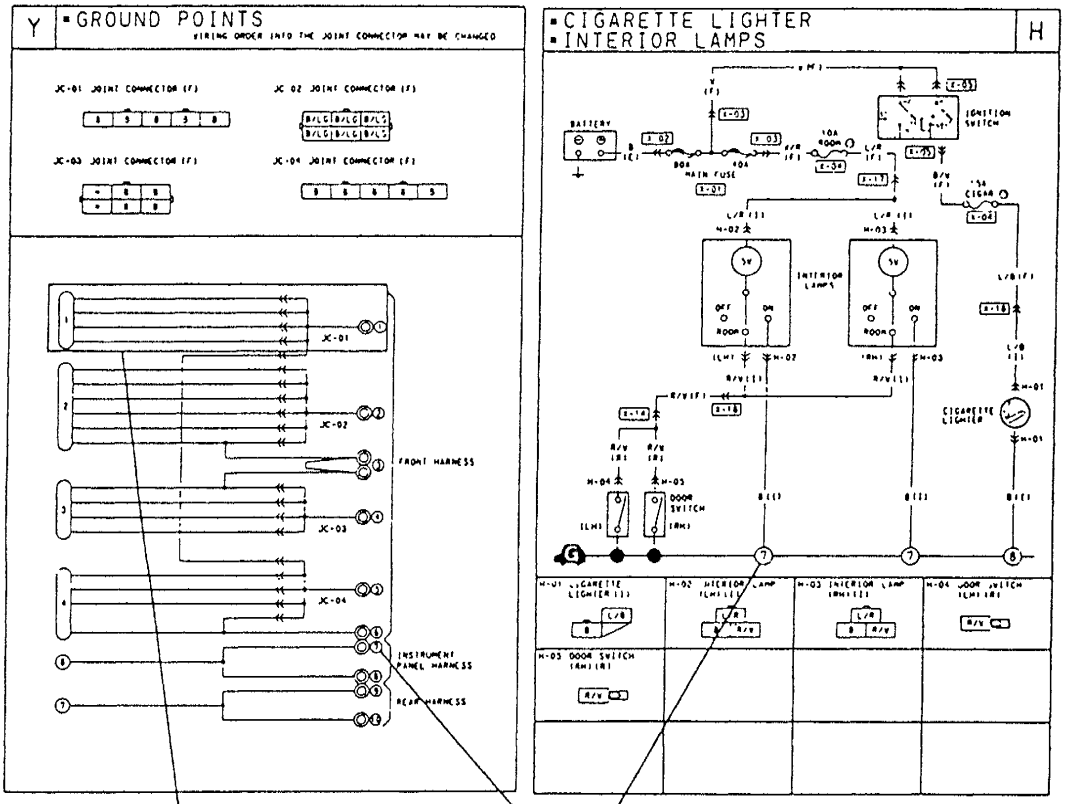

Ground Indication

Symbol	Ground
To circuit 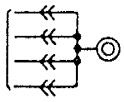	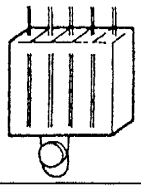

Ground Point Reference Number

The ground connection numbers in the ground points diagram correspond to those in the circuit diagram and connector locations illustration.

ELECTRICAL WIRING SCHEMATIC

This section details the wiring from the power source to the main fuses and/or other fuses of each system. If a fuse burns, use this diagram to assist in power source diagnosis.

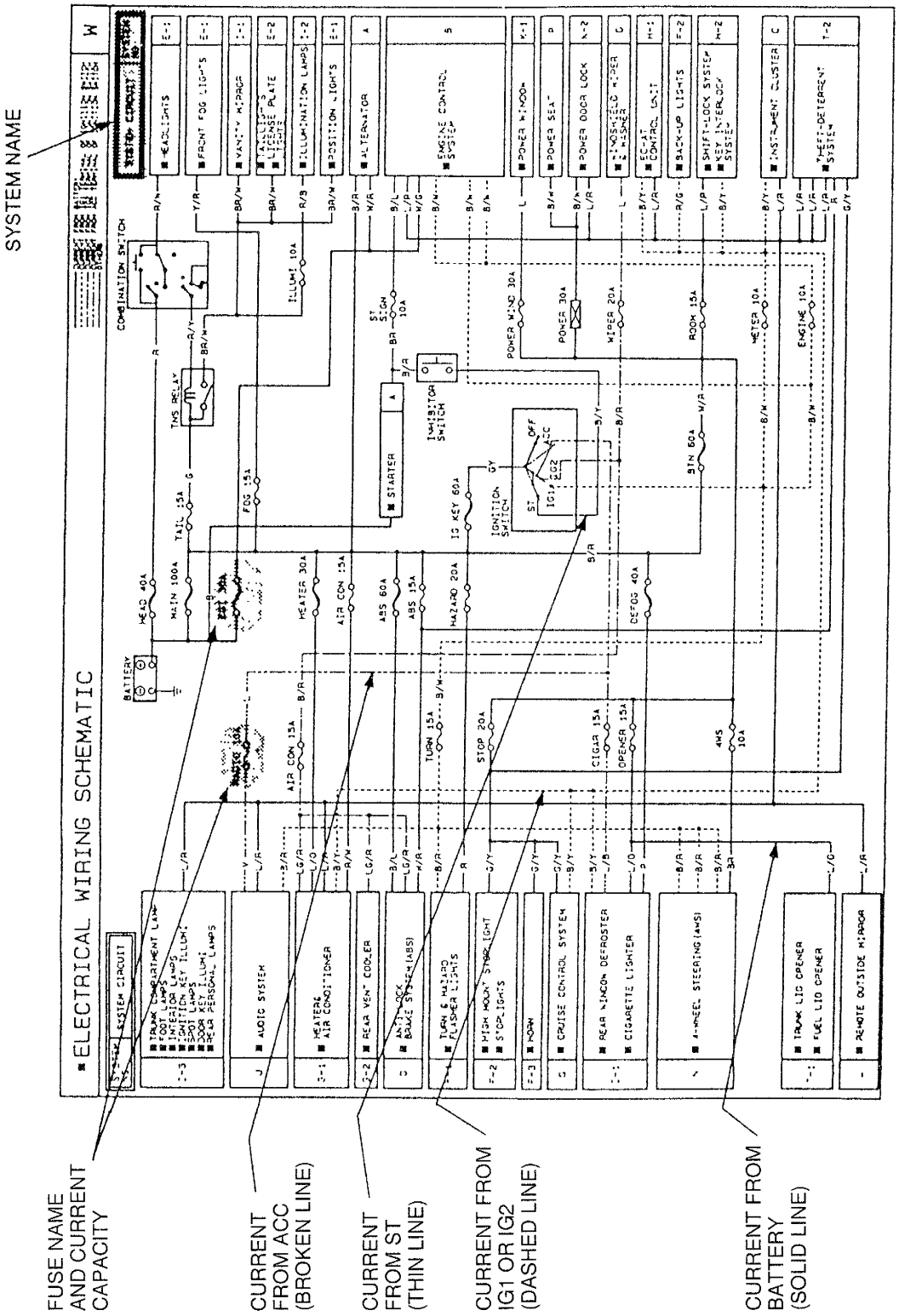

SYMBOLS

Symbol	Meaning
Battery	• Generates electricity through chemical reaction. • Supplies direct current to circuits.
Ground (1)	• Connecting point to vehicle body or other ground wire where current flows from positive to negative terminal of battery. • Ground (1) indicates a ground point to body through wire harness. • Ground (2) indicates point where component is grounded directly to body. Remarks • Current will not flow through a circuit if ground is faulty.
Ground (2)	
Fuse (1) (blade)	• Melts when current flow exceeds that specified for circuit; stopping current flow. Precautions • Do not replace with fuses exceeding specified capacity. <Blade type> <Cartridge type> <Main fuse> <Fusible link>
Fuse (2) (cartridge)	
Main fuse/ Fusible link	
Transistor (1)	• Electrical switching component. • Turns on when voltage is applied to the base (B).
Transistor (2)	• Reading code
Light	• Emits light and generates heat when current flows through filament.

Symbol	Meaning
Resistance	• A resistor with a constant value. • Mainly used to protect electrical components in circuits by maintaining rated voltage. • Reading resistance values. <Colored>

	No.1	No.2	No.3	No.4
Color	Resistance values		Multiplier	Tolerance
Black	0	0	$x10^0$	
Brown	1	1	$x10^1$	
Red	2	2	$x10^2$	
Orange	3	3	$x10^3$	
Yellow	4	4	$x10^4$	
Green	5	5	$x10^5$	
Blue	6	6	$x10^6$	
Purple	7	7	$x10^7$	
Grey	8	8	$x10^8$	
White	9	9	$x10^9$	
Gold			$x10^{-1}$	± 5%
Silver			$x10^{-2}$	± 10%
–				+20%

<Numerical>

Symbol	Meaning
Motor	• Converts electrical energy into mechanical energy.
Pump	• Pulls in and expels gases and liquids.
Cigarette lighter	• Electrical coil that generates heat.

Symbol	Meaning	Symbol	Meaning
Horn	• Generates sound when current flows.	Switch (1) Normally open (NO)	• Allows or breaks current flow by opening and closing circuits.
Speaker		Switch (2) Normally closed (NC)	
Heater	• Generates heat when current flows.	Harness (Not connected) (Connected)	• Unconnected intersecting harness. • Connected intersecting harness.
Vehicle speedometer sensor	• Movement of magnet in speedometer turns contact within sensor on and off.		
Ignition switch	• Turning ignition key operates switch contacts to complete various circuits.		
Relay (1) Normally open (NO) Relay (2) Normally closed (NC)	• Current flowing through coil produces electromagnetic force causing contact to open or close.		
Sensor (variable)	• Resistor whose resistance changes with operation of other components.	Diode	• Known as a semiconductor rectifier, the diode allows current flow in one direction only. Cathode(K) — Anode(A) Flow of electric current K-A K-A K-A
Sensor (thermistor)	• Resistor whose resistance changes with temperature.	Light-emitting diode (LED)	• A diode that lights when current flows. • Unlike ordinary light bulbs, the diode does not generate heat when lit. Cathode(K) — Anode(A) Cathode(K) Anode(A) Flow of electric current
Capacitor (condenser)	• Component that temporarily stores electrical charge.		
Solenoid	• Current flowing through coil generates electromagnetic force to operate plungers.	Reference diode (Zener diode)	• Allows current to flow in one direction up to a certain voltage; allows current to flow in the other direction

	Open	Closed
Normally open relay (NO)	No flow	Closed
Normally closed relay (NC)	Flow	No flow

ABBREVIATIONS
Mazda Standards

A	Ampere
AE	Acoustic Equilibration
AS	Autostop
A/R	Auto Reverse
ACC	Accessory
ACCEL	Accelerator
AM	Amplitude Modulation
AMP	Amplifier
ANT	Antenna
ATX	Automatic Transaxle
B	Battery
CPU	Central Processing Unit
CCT	Circuit
CIGAR	Cigarette
COMBI	Combination
CONT	Control
DEF	Defroster
DRL	Daytime Running Light
ELR	Emergency Locking Retractor
ELEC	Electric
ETR	Electronic Tuner Radio
F	Front
FL	Front Left
FR	Front Right
FM	Frequency Modulation
H/D	Heat/Defroster
HEAT	Heater
HI	High
IG	Ignition
ILLUMI	Illumination
INT	Intermittent
JB	Joint Box
LH	Left Hand
LCD	Liquid Crystal Display
LO	Low
M	Motor
MAX	Maximum
MID	Middle
MIN	Minimum
MIX	Mixture
MPX	Multiplex
MTX	Manual Transaxle
NC	Normally Closed
NO	Normally Open
P	Power
R	Rear
RH	Right Hand
RL	Rear Left
RPM	Revolutions Per Minute
RR	Rear Right
REC	Recirculation
SAS	Sophisticated Air bag Sensor
SOL	Solenoid
SST	Special Service Tool
ST	Start
SW	Switch
TEMP	Temperature
TNS	Tail Number Side Lights
TR	Transistor
VENT	Ventilation
VOL	Volume

SAE Standards

In accordance with new regulations, SAE (Society of Automotive Engineers) standard names and abbreviations are now used in this manual. The table below lists the names and abbreviations that have been used in Mazda manuals up to now and their SAE equivalents.

Previous Standard		SAE standard		
Abbreviation	Name	Abbreviation	Name	Remark
—	Accelerator Pedal	AP	Accelerator Pedal	
—	Air Cleaner	ACL	Air Cleaner	
—	Air Conditioning	A/C	Air Conditioning	
—	Airflow Meter	VAF	Volume Air Flow Sensor	
—	Airflow Sensor	MAF	Mass Air Flow Sensor	
—	Alternator	GEN	Generator	
—	ATF Thermosensor	—	Transmission (Transaxle) Fluid Temperature Sensor	
—	Atmospheric Pressure	BARO	Barometric Pressure	
V_B	Battery Voltage	B+	Battery Positive Voltage	
—	Catalytic Converter	OC	Oxidation Catalytic Converter	
		TWC	Three-way Catalytic Converter	
		WU-TWC	Warm Up Three-way Catalytic Converter	#1
—	Circuit Opening Relay	FPR	Fuel Pump Relay	#2
—	Clutch Position	CPP	Clutch Pedal Position	
—	Crank Angle Sensor	CMP	Camshaft Position Sensor	
—	Crank Angle Sensor 2	CKP	Crankshaft Position Sensor	
—	Diagnosis Connector	DLC	Data Link Connector	
—	Diagnosis/Self-Diagnosis	OBD	On-Board Diagnostic	
—	Direct Ignition	DLI	Distributorless Ignition	
—	EC-AT Control Unit	TCM	Transmission (Transaxle) Control Module	
EGI	Electronic Gasoline Injection System	CIS	Continuous Fuel Injection System	
—	Electronic Spark Ignition	EI	Electronic Ignition	#3
ECU	Engine Control Unit	PCM	Powertrain Control Module	#4
		ECM	Engine Control Module	
—	Engine Modification	EM	Engine Modification	
—	Engine RPM Signal	—	Engine Speed Input Signal	
—	Evaporative Emission	EVAP	Evaporative Emission	
—	Exhaust Gas Recirculation	EGR	Exhaust Gas Recirculation	
—	Fan Control	FC	Fan Control	
—	Feedback System	CLS	Closed Loop System	
—	Flexible Fuel	FF	Flexible Fuel	
—	Fuel Pump	FP	Fuel Pump	
—	Fully Closed	CTP	Closed Throttle Position	
—	Fully Open	WOT	Wide Open Throttle	
—	Ground/Earth	GND	Ground	
—	IC Regulator	VR	Voltage Regulator	

#1: Directly connected to exhaust manifold
#2: In some models, there is a fuel pump relay that controls pump speed.
That relay is now called the fuel pump relay (Speed).
#3: Controlled by the ECM (PCM)
#4: Device that controls engine and powertrain

Previous Standard		SAE Standard		
Abbreviation	Name	Abbreviation	Name	Remark
—	Idle Speed Control	IAC	Idle Air Control	
—	Idle Switch	—	Closed Throttle Position Switch	
—	Igniter	ICM	Ignition Control Module	
—	Inhibitor Position	TR	Transmission (Transaxle) Range	
—	Intake Air Pressure	MAP	Manifold Absolute Pressure	
—	Intake Air Thermo	IAT	Intake Air Temperature	
—	Intercooler	CAC	Charge Air Cooler	
—	Knock Sensor	KS	Knock Sensor	
—	Line Pressure Solenoid Valve	—	Pressure Control Solenoid	
—	Lock-up Position	TCC	Torque Converter Clutch	
—	Malfunction Indicator Light	MIL	Malfunction Indicator Lamp	
—	Multiport Fuel Injection	MFI	Multiport Fuel Injection	
—	Open Loop	OL	Open Loop	
—	Overdrive	4GR	Fourth Gear	
—	Oxygen Sensor	HO2S	Heated Oxygen Sensor	With heater
		O2S	Oxygen Sensor	
—	Park/Neutral Range	PNP	Park/Neutral Position	
—	Power Steering Pressure	PSP	Power Steering Pressure	
—	Pulse Generator	—	Input/Turbine Speed Sensor	
—	Reed Valve	SAPV	Secondary Air Pulse Valve	
—	Secondary Air Injection System	PAIR	Pulsed Secondary Air Injection	Pulsed injection
		AIR	Secondary Air Injection	Inject with compressor
—	Sequential Fuel Injection	SFI	Sequential Multipoint Fuel Injection	
—	Service Code(s)	DTC	Diagnostic Trouble Code(s)	
—	Spark Ignition	DI	Distributor Ignition	
—	Stoplight Switch	—	Brake Switch	
—	Test Mode	DTM	Diagnostic Test Mode	#5
—	Throttle Body	TB	Throttle Body	
—	Throttle Sensor	TP	Throttle Position Sensor	
—	Turbocharger	TC	Turbocharger	
—	Vehicle Speed Sensor	VSS	Vehicle Speed Sensor	
—	Vehicle Speed Sensor 1	—	Output Speed Sensor	
—	Water Thermo	ECT	Engine Coolant Temperature	
—	1—2 Shift Solenoid Valve	—	Shift Solenoid A	
	Shift A Solenoid Valve			
—	2—3 Shift Solenoid Valve	—	Shift Solenoid B	
	Shift B Solenoid Valve			
—	3—4 Shift Solenoid Valve	—	Shift Solenoid C	
—	3rd Gear	3GR	Third Gear	
—	—	—	Incorrect Gear Ratio	

#5: Diagnostic trouble codes depend on the diagnostic test mode

FUNDAMENTAL TROUBLESHOOTING

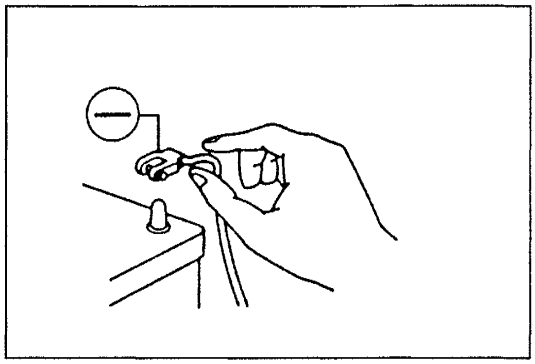

PRECAUTIONS

Disconnecting the Battery

- Disconnect the negative (–) battery cable first and reconnect it last. Make sure all switches, including the ignition switch, are at OFF before disconnecting or connecting the battery cables. If a switch is on, semiconductor components may be damaged.

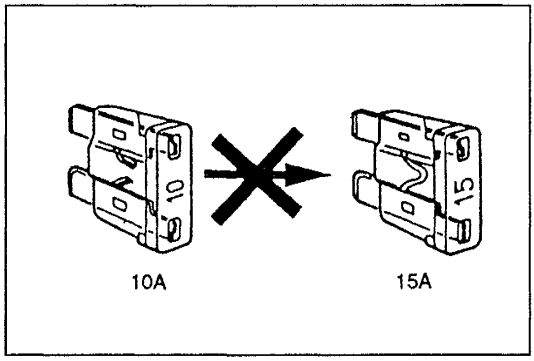

Replacing Fuses

- Replace blown fuses with ones having the same designated capacity. If a fuse is replaced with one of a larger capacity, components may be damaged or a fire may result.

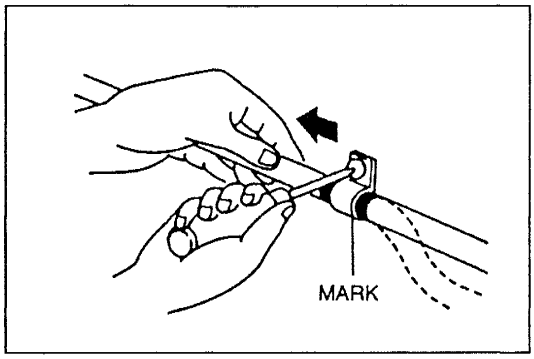

Securing Harnesses

- Clamp all harnesses that are near vibrating components, such as the engine, to remove slack and prevent contact resulting from vibration. If the harness is in contact with a vibrating part, the harness insulation may wear or break.

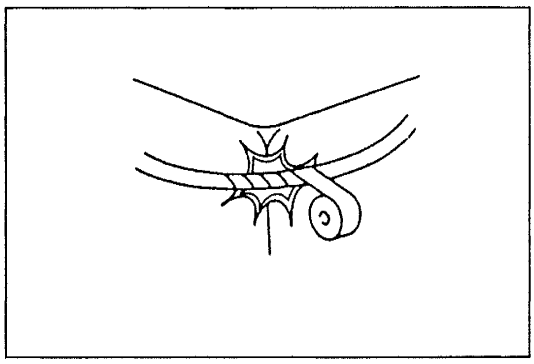

- Tape areas of the harness that may rub or bump against sharp edges. Without the tape, the harness insulation may be cut.

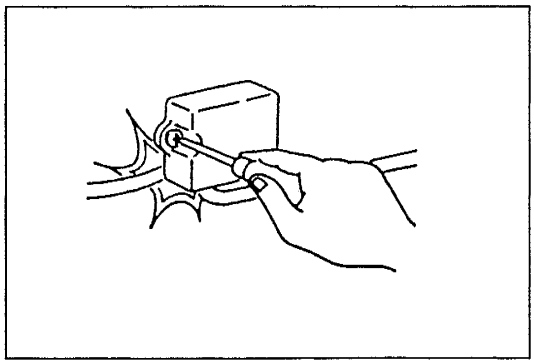

- When mounting components, make sure the harness is not caught. If it is caught, the harness insulation may wear or break.

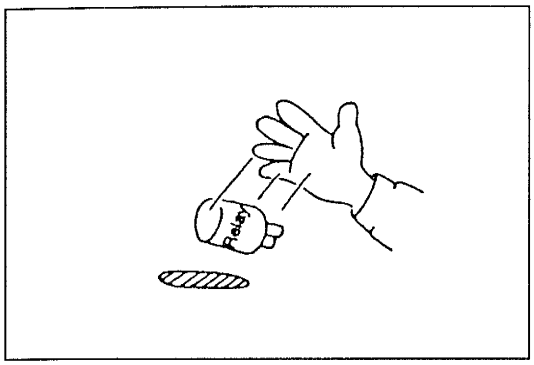

Handling Components

- Do not handle electrical components roughly or drop them. Do not alter the wiring or electrical equipment. Doing so can overload or short a circuit, which may cause a fire or damage the vehicle or components.

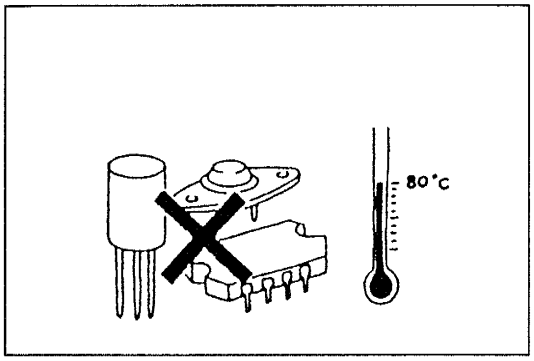

- Remove heat-sensitive components, such as relays, when performing maintenance where temperatures can exceed 80°C {176°F}, such as welding.

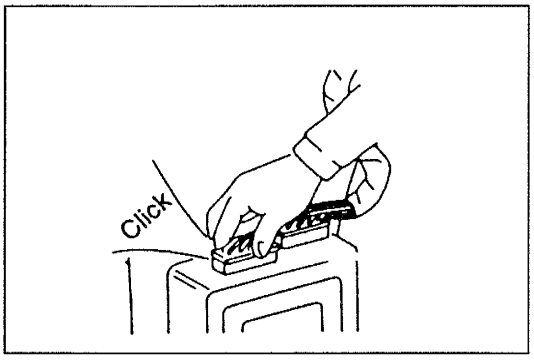

- Make sure connectors are fitted securely when installed.

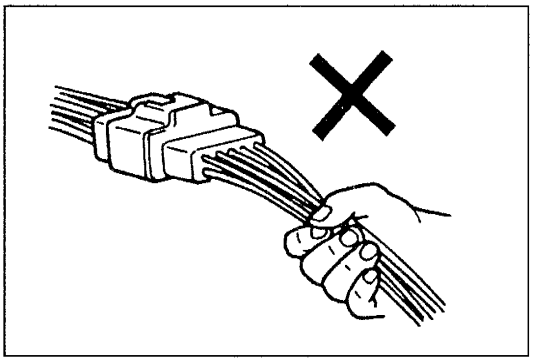

- When disconnecting two connectors, grasp the connectors, not the wires.

HANDLING CONNECTORS

Removing connectors		Checking connector contacts	Checking for loose terminals	Removing terminals
Push type	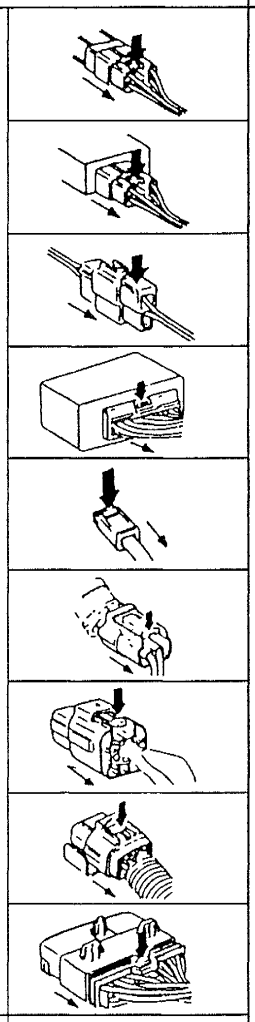	When using a matching male terminal, make sure there is no looseness in the female terminal. Improperly engaged connectors will cause poor terminal contact. 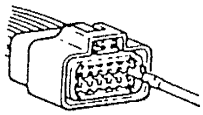	Lightly pull each wire to make sure the terminal does not pull out of the connector. A loose terminal will cause poor terminal contact. 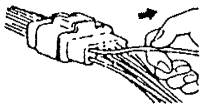	<CPU connectors> 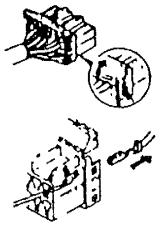 1. Open the rear cover. 2. Lift the tab with a small screwdriver to remove the terminal. <General connectors> 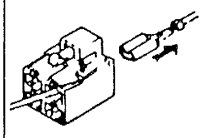 Lift the tab with a small screwdriver to remove the terminal. <Round connectors> 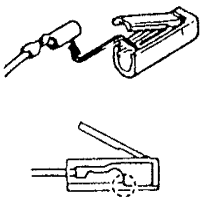 1. Open the cover. 2. Lift the terminal to remove it. 3. Make sure the terminal is securely mounted in the connector when reinstalling. <Common ground connectors> 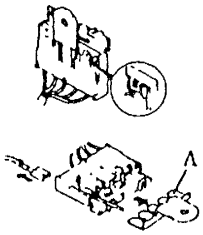 1. Open the cover. 2. Remove A. 3. Lift the tab with a small screwdriver to remove the terminal.
Pull-up type				
Spring type				

USING ELECTRICAL TEST EQUIPMENT

Equipment	Purpose	Use	Handling
Test light 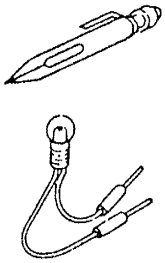	Used to find open or short circuits.	• Connect the test light between the circuit being measured and ground. • The light will turn on if the circuit is energized to the point tested. 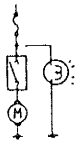	• Use test lights with 12V 1.4W or 3.4W bulbs or light-emitting diodes (LEDs). Using large-capacity bulbs may damage the CPU.
Jumper wire 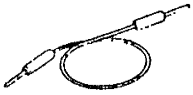	Used to create a temporary circuit.	• Connect the jumper wire between the terminals of a circuit to bypass a switch. 	• Do not connect the power side directly to ground. This may burn the harness or damage electrical components.
Voltmeter 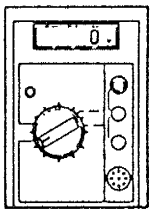	Used to find open or short circuits by measuring circuit voltage.	• Set the range to the specified voltage. • Connect the positive (+) lead to where voltage is to be measured and the negative (–) lead to ground. 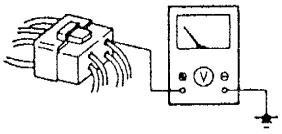	• Connect the voltmeter in parallel with the circuit. • Use the service hole when measuring the voltage at the data link connector. 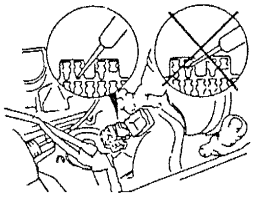 • Tie a thin wire to the positive (+) lead to access narrow terminals.
Ohmmeter 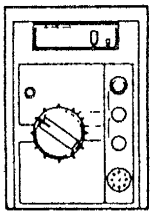	Used to find open or short circuits, to confirm continuity, and to check sensor resistance.	• Make sure the ignition switch is off or the negative (–) battery cable is disconnected. • Switch the ohmmeter to the appropriate measuring range. • Set the ohmmeter to zero before connecting the leads to the connector. 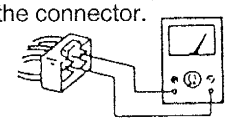	• If current is flowing through the circuit, the ohmmeter could be burned.
Ammeter 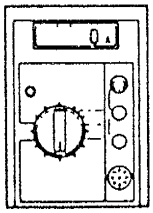	Used to check alternator output, current supplied to the starter, and dark current within a circuit. (Dark current is the current flowing through the circuit when the ignition switch is at OFF.)	• Set the range to the desired amperage. • Touch the positive (+) lead to the power-side terminal and the negative (–) lead to the ground-side terminal. 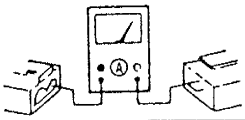	• Connect the ammeter in series with the circuit. The ammeter may be burned if it is connected in parallel.

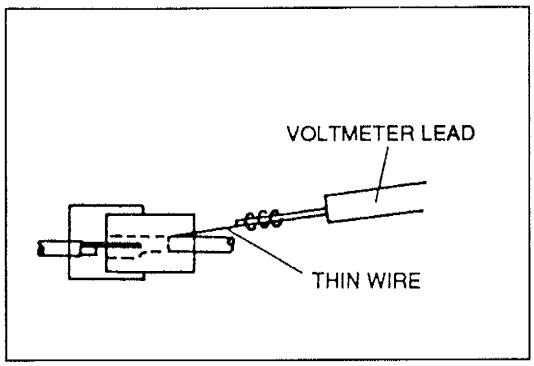

MEASURING VOLTAGE

Connectors

When checking for improperly engaged connectors, poor terminal contacts, or loose terminals, wrap a thin wire around the voltmeter lead. A large voltmeter lead may momentarily contact another terminal when it is inserted into the connector and give an incorrect reading.

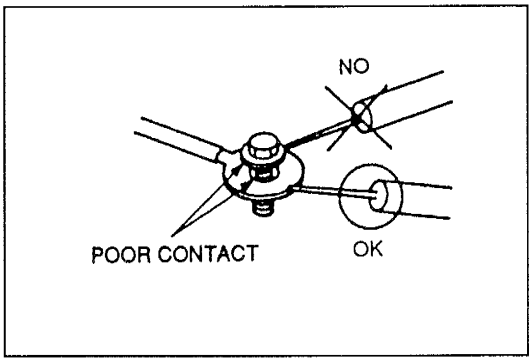

Ground

Touch the voltmeter to the ground wire when checking the ground circuit. If there is poor contact between the ground wire and ground and the voltmeter does not touch the wire, the voltmeter will give an incorrect reading.

Checkpoints

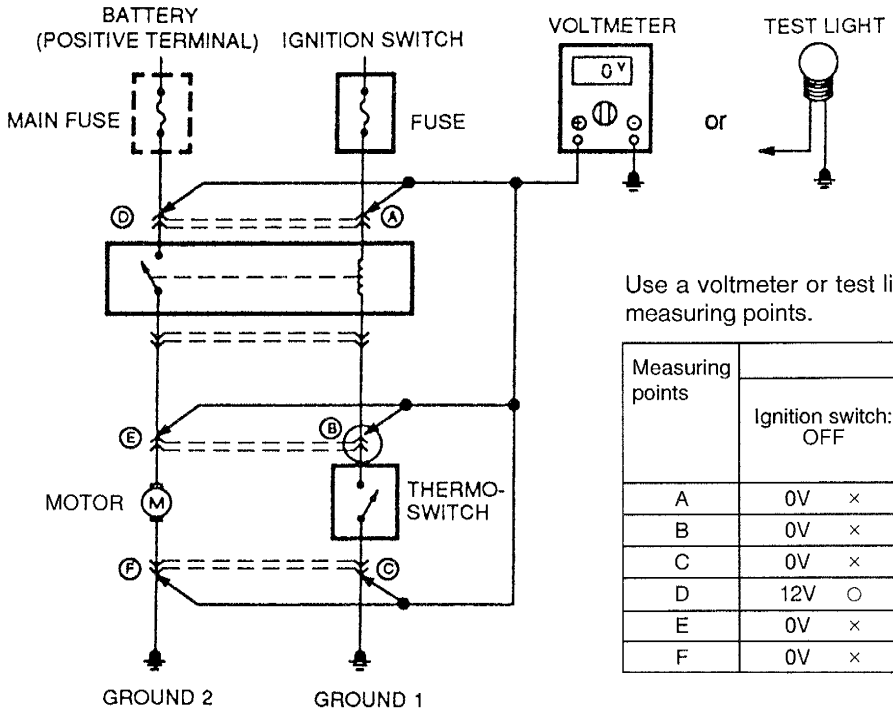

Use a voltmeter or test light to check for voltage at the measuring points.

Measuring points	Circuit operation		
	Ignition switch: OFF	Ignition switch: ON	
		Thermoswitch: OFF	Thermoswitch: ON
A	0V ×	12V ○	12V ○
B	0V ×	12V ○	0V ×
C	0V ×	0V ×	0V ×
D	12V ○	12V ×	12V ○
E	0V ×	0V ×	12V ○
F	0V ×	0V ×	0V ×

○ : Test lamp ON
× : Test lamp OFF

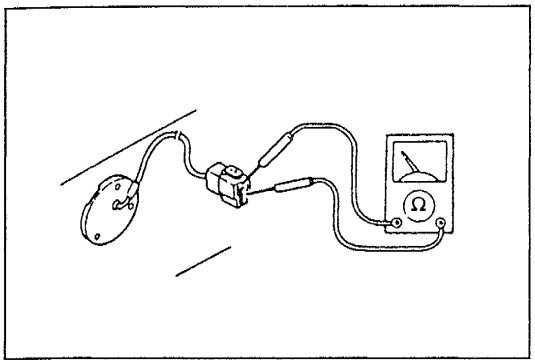

MEASURING CONTINUITY/RESISTANCE

Switches

Touch the ohmmeter leads to the switch terminals to check for continuity.

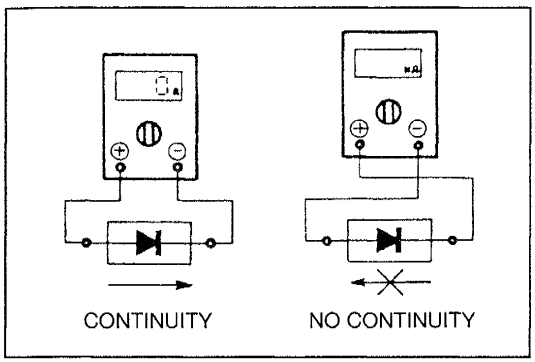

Diodes

Connect the ohmmeter leads as shown in the figure to check for continuity. If the leads are reversed, continuity will not be indicated by the ohmmeter.

Note

- The negative (–) lead of the ohmmeter is connected to the positive terminal of the internal ohmmeter battery; the positive (+) lead to the negative terminal of the battery.

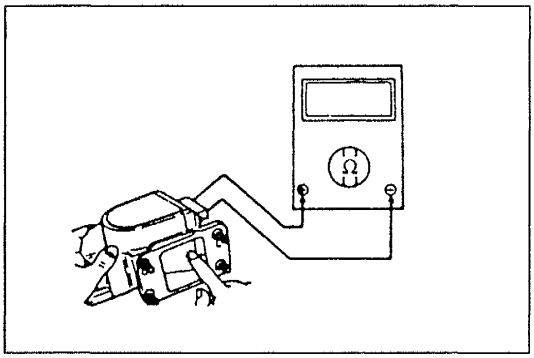

Sensors and Solenoid Valves

Touch the ohmmeter leads to the terminals of the sensor or solenoid valve to check the resistance.

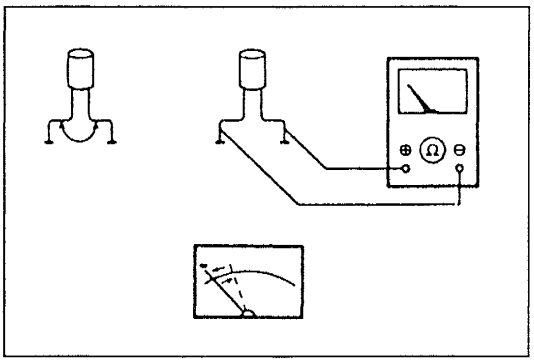

Capacitors

1. Short between the terminals with a jumper wire to discharge the capacitor.
2. Set the ohmmeter range to x10 kΩ and connect the ohmmeter leads to the capacitor terminals.
3. The capacitor is good if the needle of the ohmmeter swings once and returns to its original position.

FINDING SHORT CIRCUITS

Shorts occur between the power (positive) and ground (negative) sides of a circuit. Therefore, finding a short circuit requires determining how the circuit is routed.

Circuits Not Connected to Control Module

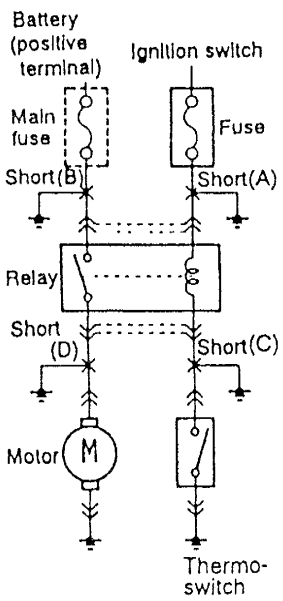

Example		Finding short circuits
Short location	**Indication**	
Short (A)	• Fuse melts. 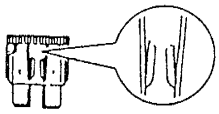	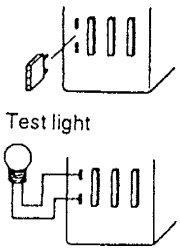 1. Remove the fuse and main fuse of the circuit. 2. Disconnect all connectors of electrical components in the circuit. 3. Attach a voltmeter or test light to the fuse box and reconnect each connector, beginning nearest the power source. 4. Check for voltage or see if the test light turns on as the connectors are connected.
Short (B)	• Main fuse melts. 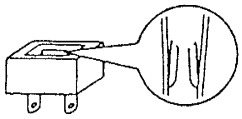	
Short (C)	• The motor operates regardless of whether the thermoswitch is on or off when the ignition switch is on. • The fuse is not melted.	
Short (D)	• The main fuse melts when the ignition switch and thermoswitch are on and the relay is operating.	A short has occurred where the voltmeter reads 0V or the test light does not turn on.

Circuits Connected to Control Module

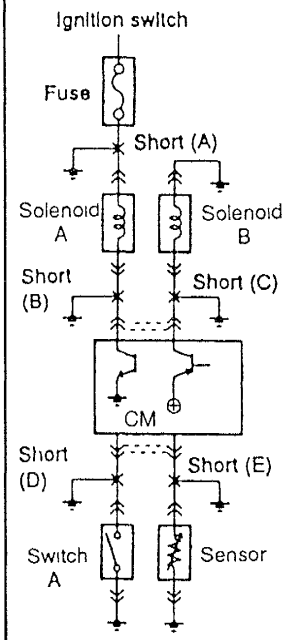

Example		Finding short circuits
Short location	**Indication**	
Short (A)	• Fuse melts. 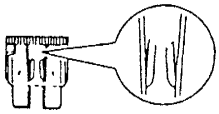	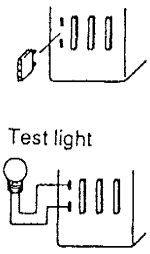 1. Remove the fuse and main fuse of the circuit. 2. Disconnect all connectors of electrical components in the circuit. 3. Attach a voltmeter or test light to the fuse box and reconnect each connector, beginning nearest the power source. 4. Check for voltage or see if the test light turns on as the connectors are connected.
Short (B)	• Solenoid A operates normally when the ignition switch is on, but switch A is off.	
Short (C)	• The CM transistor burns out when the ignition switch is turned on.	A short has occurred where the voltmeter reads 0V or the test light does not turn on.
Short (D)	• The CM thinks the switch is on because the same conditions exist when the switch is on.	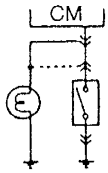 1. Attach the test light or voltmeter to the CM connector and switch/sensor connector. 2. Check for voltage or see if the test light turns on.
Short (E)	• The CM thinks the sensor has 0Ω because the same conditions exist as when there is no resistance. • If the CM is equipped with a on-board diagnostic function, a diagnostic trouble code will be output.	A short has occurred where the voltmeter reads 0V or the test light does not turn on.

GROUND POINTS

Y-1 FS ■ GROUND POINTS

① B	② B	JC-01 JOINT CONNECTOR (F): B, B/Y, B, B, B	JC-02 JOINT CONNECTOR (I): B, B, B	⑤ B/L	JC-03 JOINT CONNECTOR (EM): MTX B, B/B, B/B, B/R, B/R; ATX B/LG, B, B, B, B/R	
⑦ MTX B/R, B/R; ATX B/R		⑧ B/G, B/G	⑨ B, B	JC-05 JOINT CONNECTOR (R): B, B, B, B, B	JC-06 JOINT CONNECTOR (AB): B, B, B, B	⑬ B
⑭ B/Y, B/G						

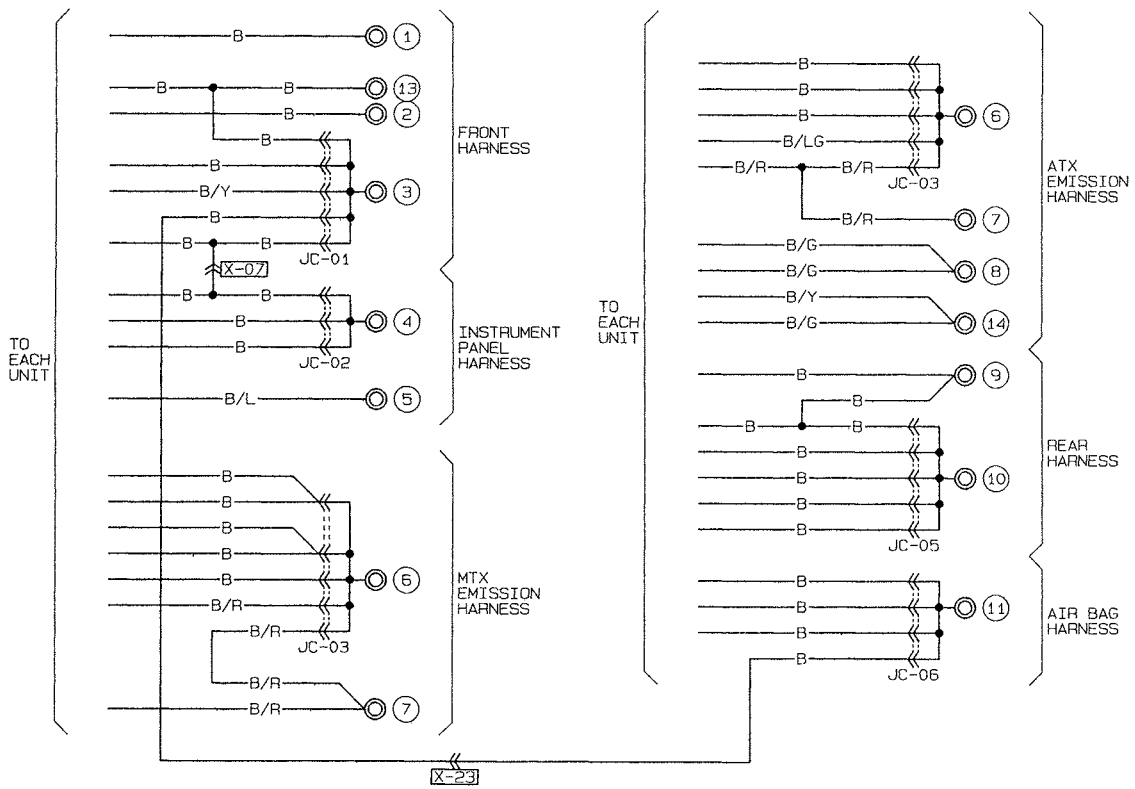

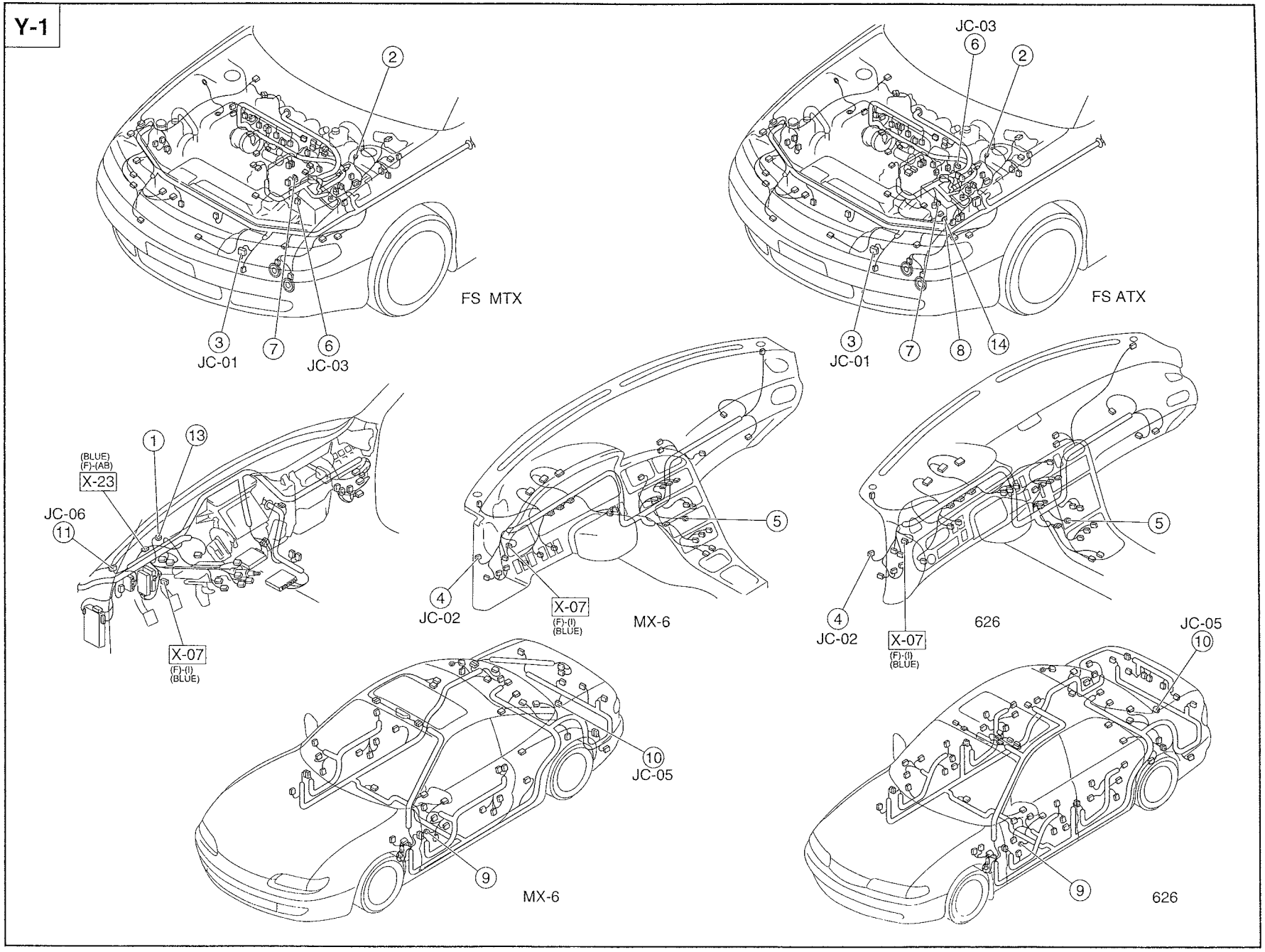
Y-1
2
3
JC-01
7
6
JC-03
FS MTX
JC-03
6
2
3
JC-01
7
8
14
FS ATX
1
13
(BLUE)
(F)-(AB)
X-23
JC-06
11
X-07
(F)-(I)
(BLUE)
5
4
JC-02
X-07
(F)-(I)
(BLUE)
MX-6
5
4
JC-02
X-07
(F)-(I)
(BLUE)
626
JC-05
10
10
JC-05
9
MX-6
9
626

Y-2 KL ■ GROUND POINTS

① B	② B	JC-01 JOINT CONNECTOR (F): B, B/Y, B, B, B	JC-02 JOINT CONNECTOR (I): B, B, B	⑤ B/L	JC-03 JOINT CONNECTOR (EM): B, B, B, B, B, B, B/R, B	⑦ MTX B/R, B/R; ATX B/R
⑧ B/R	⑨ B, B	JC-05 JOINT CONNECTOR (R): B, B, B, B, B	JC-06 JOINT CONNECTOR (AB): B, B, B, B	⑫ B/P, B/P	⑬ B	

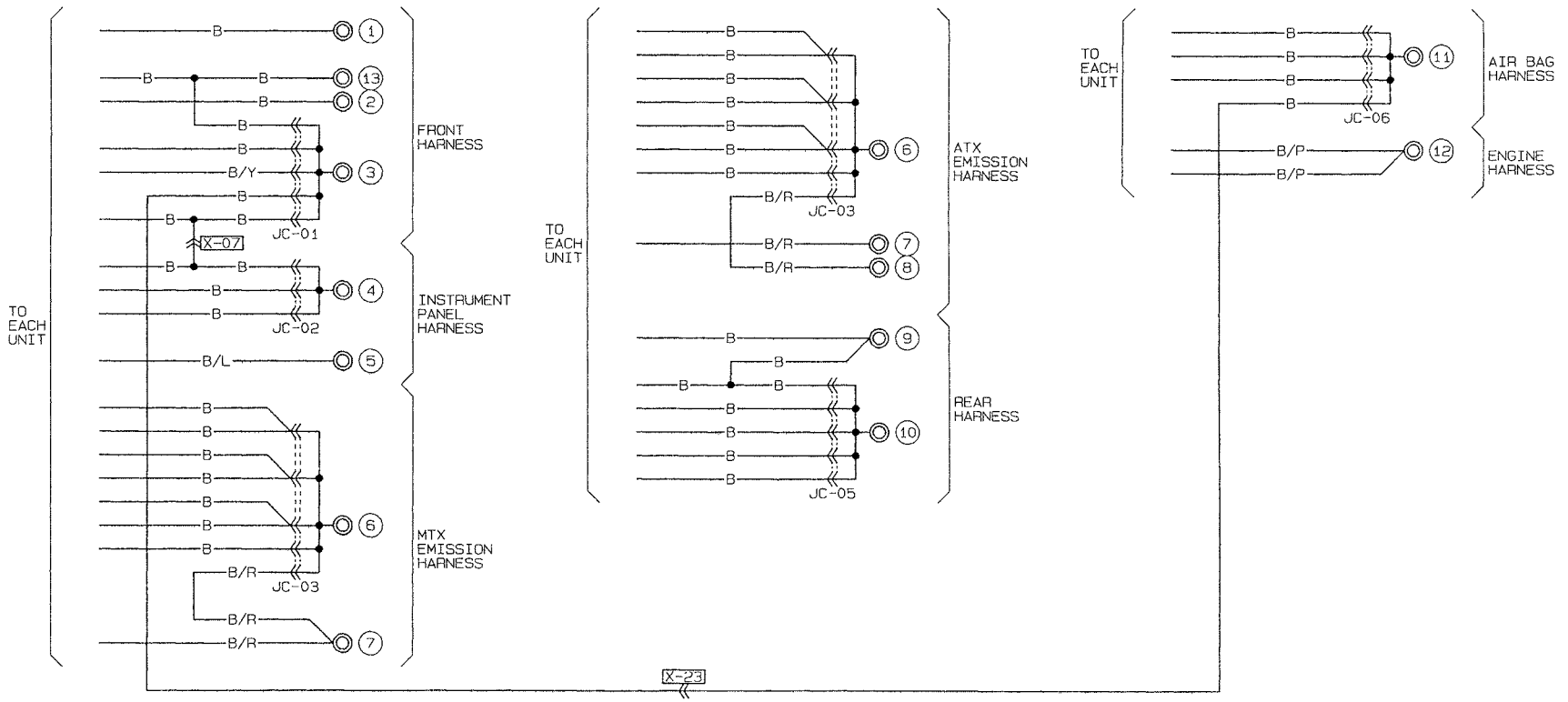

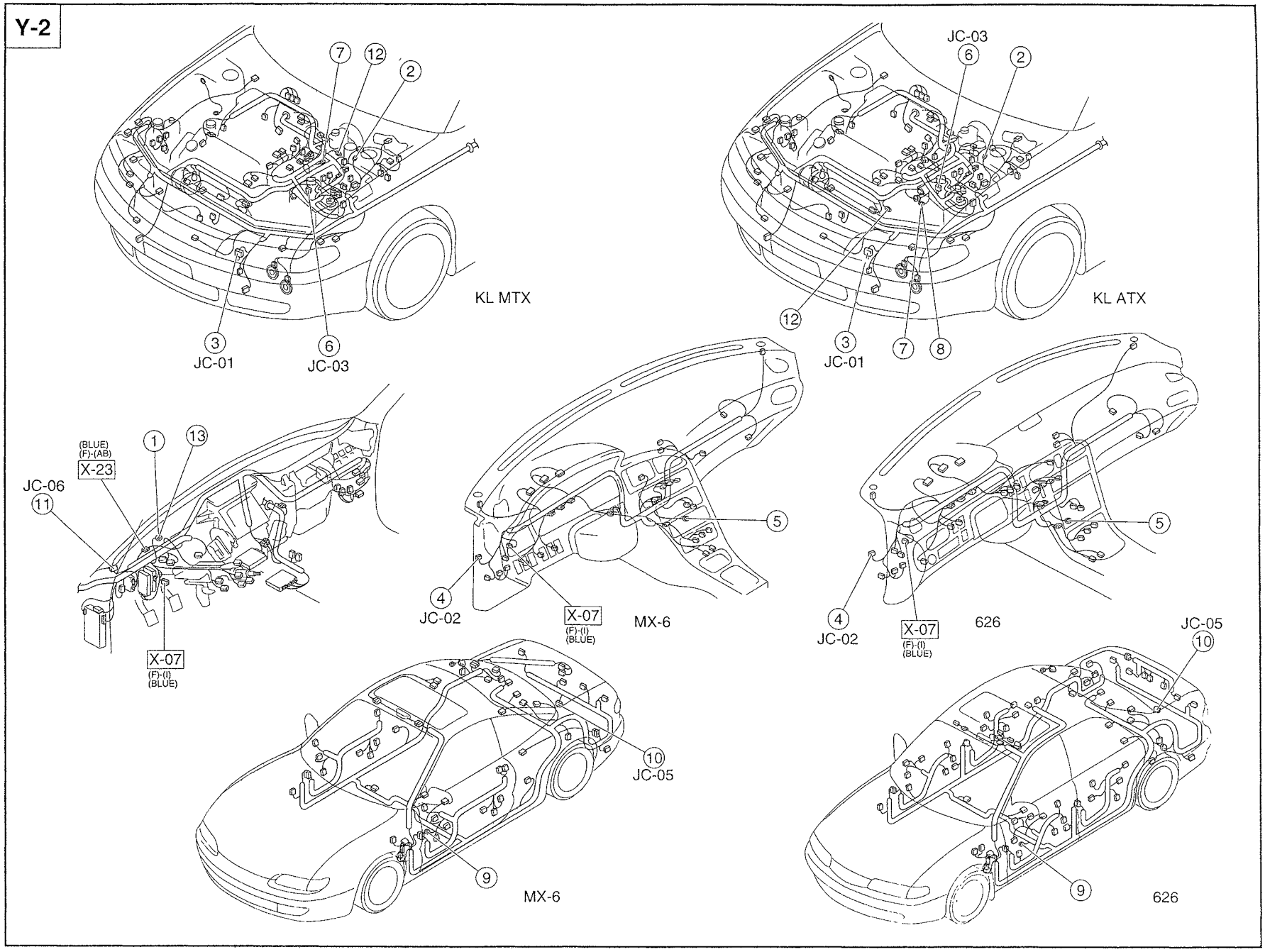
Y-2
7
12
2
3
JC-01
6
JC-03
KL MTX
JC-03
6
2
12
3
JC-01
7
8
KL ATX
(BLUE)
(F)-(AB)
X-23
1
13
JC-06
11
X-07
(F)-(I)
(BLUE)
5
4
JC-02
X-07
(F)-(I)
(BLUE)
MX-6
5
4
JC-02
X-07
(F)-(I)
(BLUE)
626
JC-05
10
10
JC-05
9
MX-6
9
626

ELECTRICAL WIRING SCHEMATIC

W-1 FS ■ ELECTRICAL WIRING SCHEMATIC

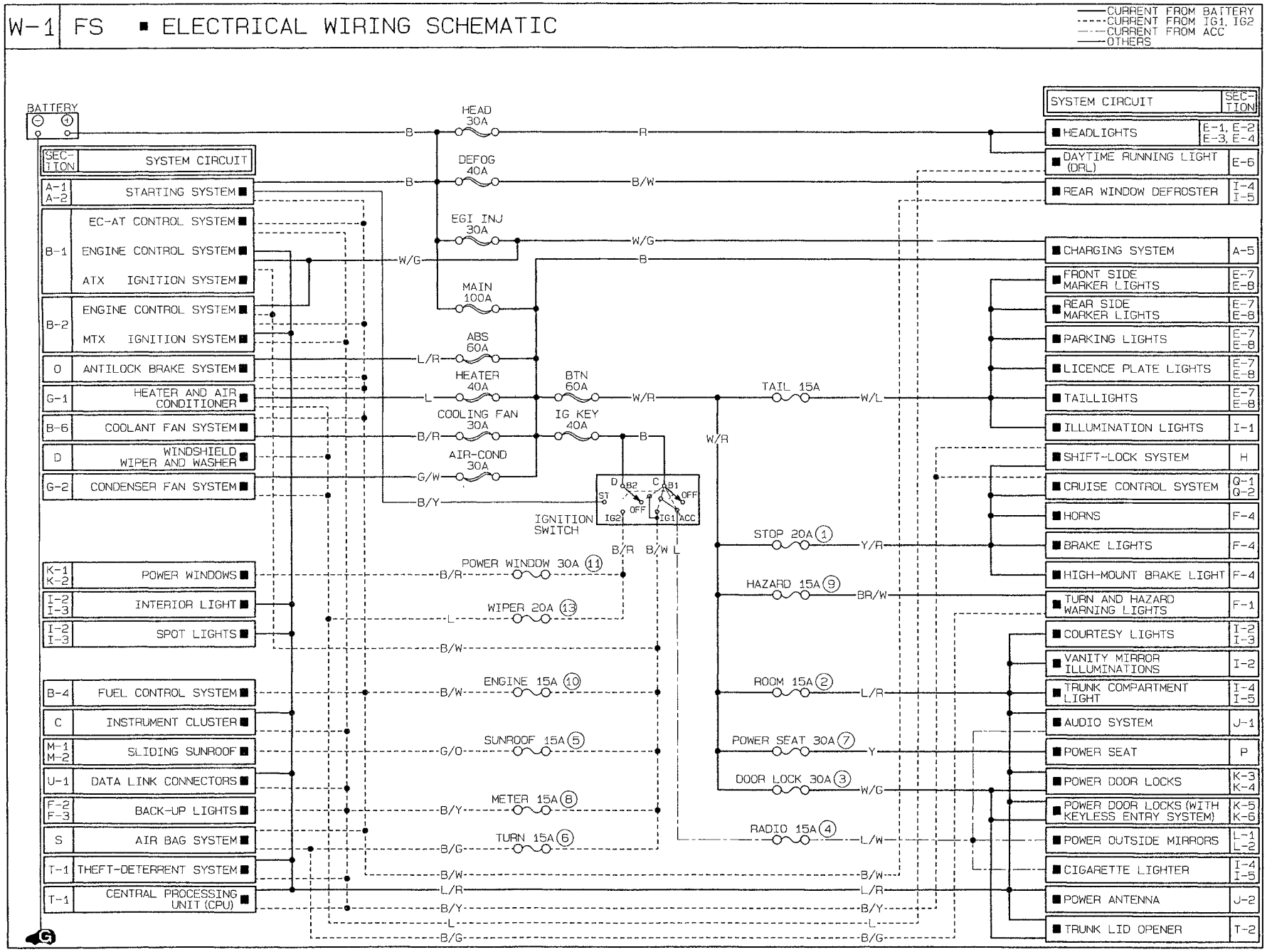

W-2 KL ■ ELECTRICAL WIRING SCHEMATIC

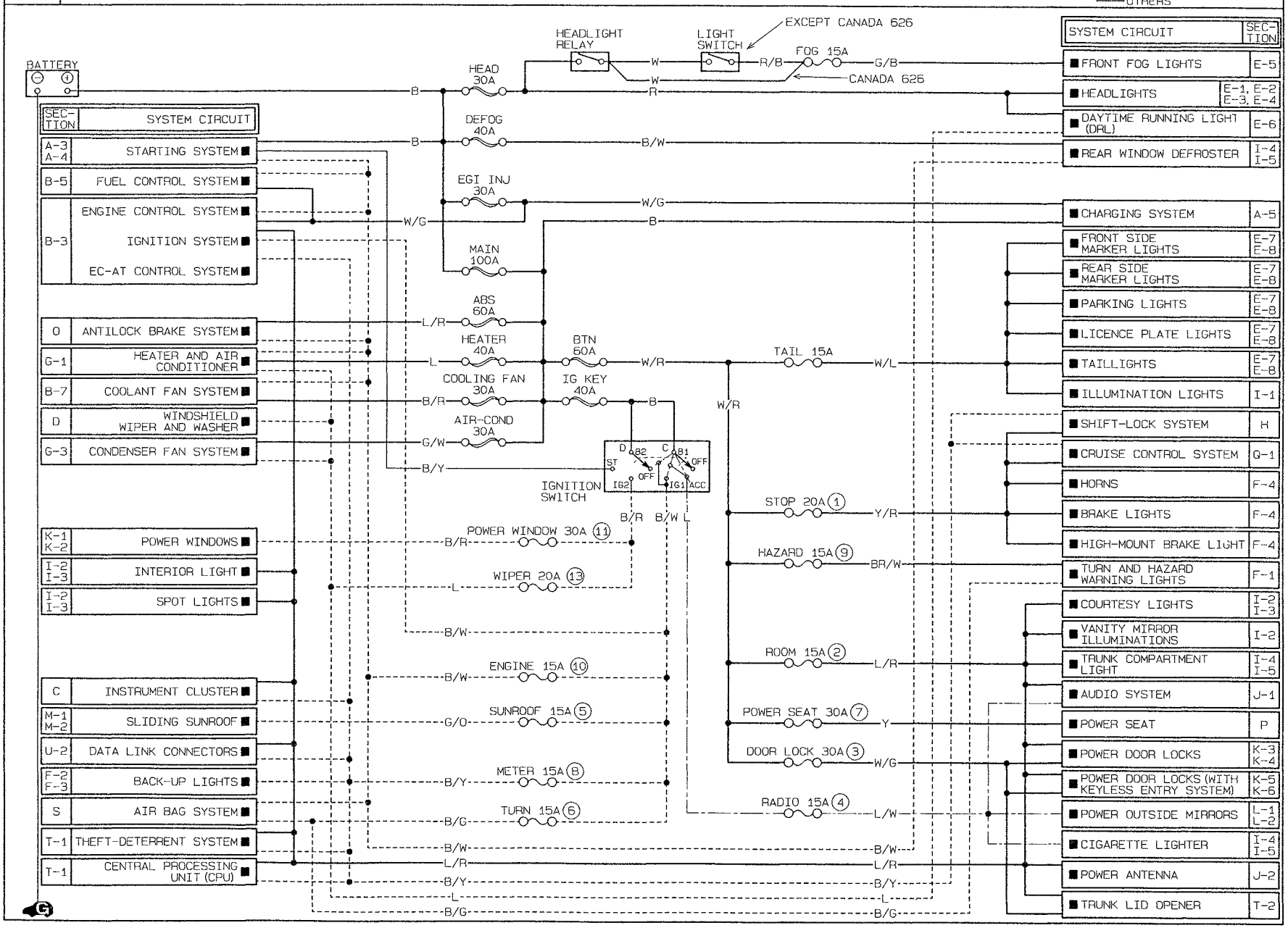

Before beginning any service procedure, refer to section S of this manual for air bag system service warnings.

FUSE AND JOINT BOX

FUSE AND JOINT BOX

STRUCTURAL VIEW

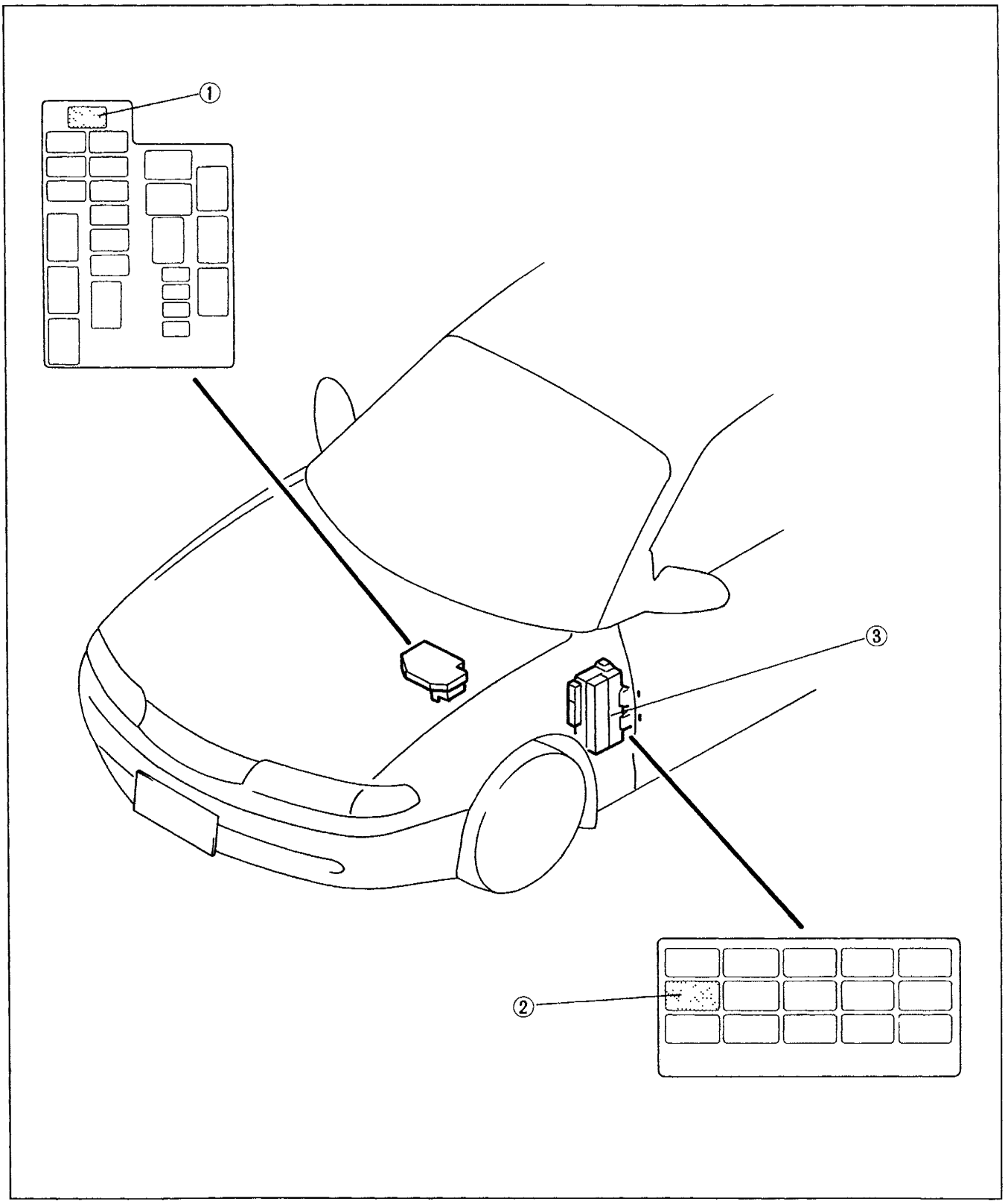

1. MAIN fuse
   Removal / Installation ..... page Z1–3
2. ROOM fuse
   Installation..... page Z1–3
3. Joint box
   Removal / Installation ..... page Z1–4

FUSES

Caution
- **If one or more fuses are burnt, check for a shorted harness. Determine and correct the cause of burnt fuses before replacing the fuses with the specified type.**
- **If the fuse is replaced before doing this, it may burn again.**

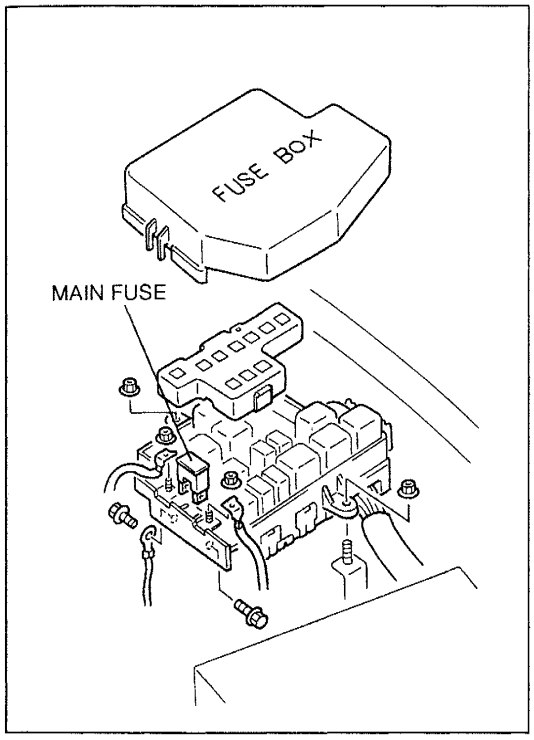

MAIN Fuse
Removal / Installation
1. Disconnect the negative battery cable.
2. Remove the main fuse block cover.
3. Remove the main fuse block mounting nuts.
4. Remove the main fuse mounting bolts.
5. Remove the MAIN fuse.
6. Install in the reverse order of removal.

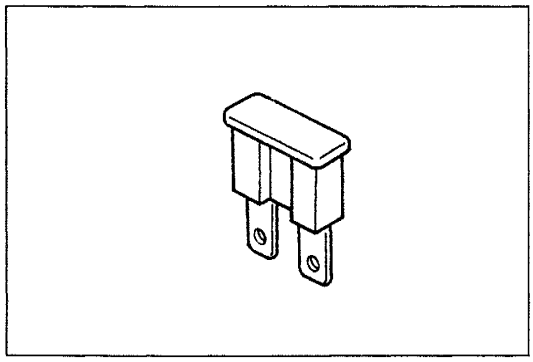

ROOM Fuse
Installation

Note
- When the ROOM fuse is burnt or removed, the malfunction indicator lamp illuminates. If the ROOM fuse is replaced or installed with the ignition switch at ON, the malfunction indicator lamp will continue to illuminate.

1. Turn the ignition switch to LOCK.
2. Install the ROOM fuse.

JOINT BOX

Removal / Installation

1. Disconnect the negative battery cable.
2. Remove in the order shown in the figure.
3. Install in the reverse order of removal.

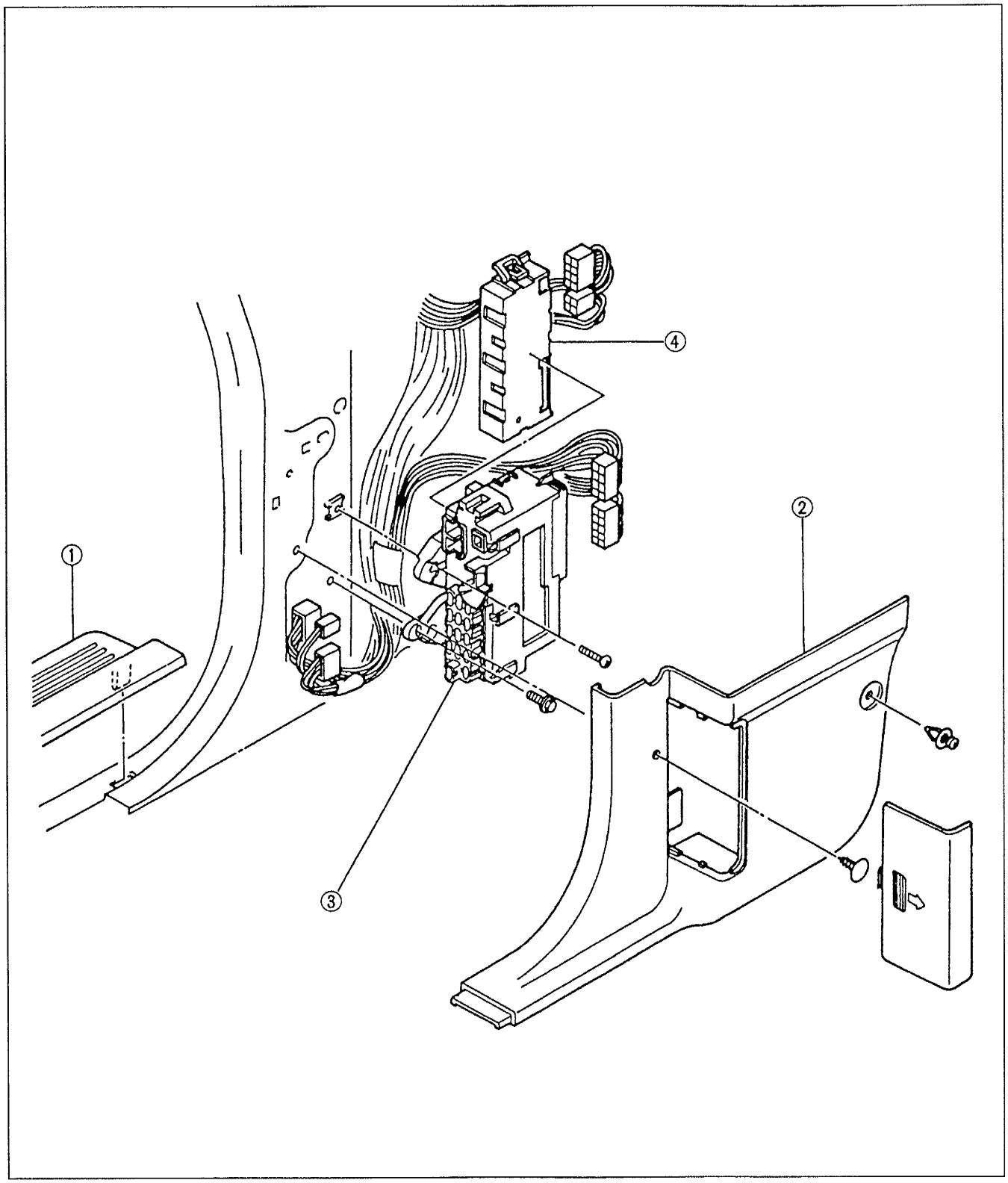

1. Scuff plate
2. Front side trim
3. Joint box
4. CPU
   Inspection ..... section Z3

Before beginning any service procedure, refer to section S of this manual for air bag system service warnings.

RELAY

RELAY

STRUCTURAL VIEW

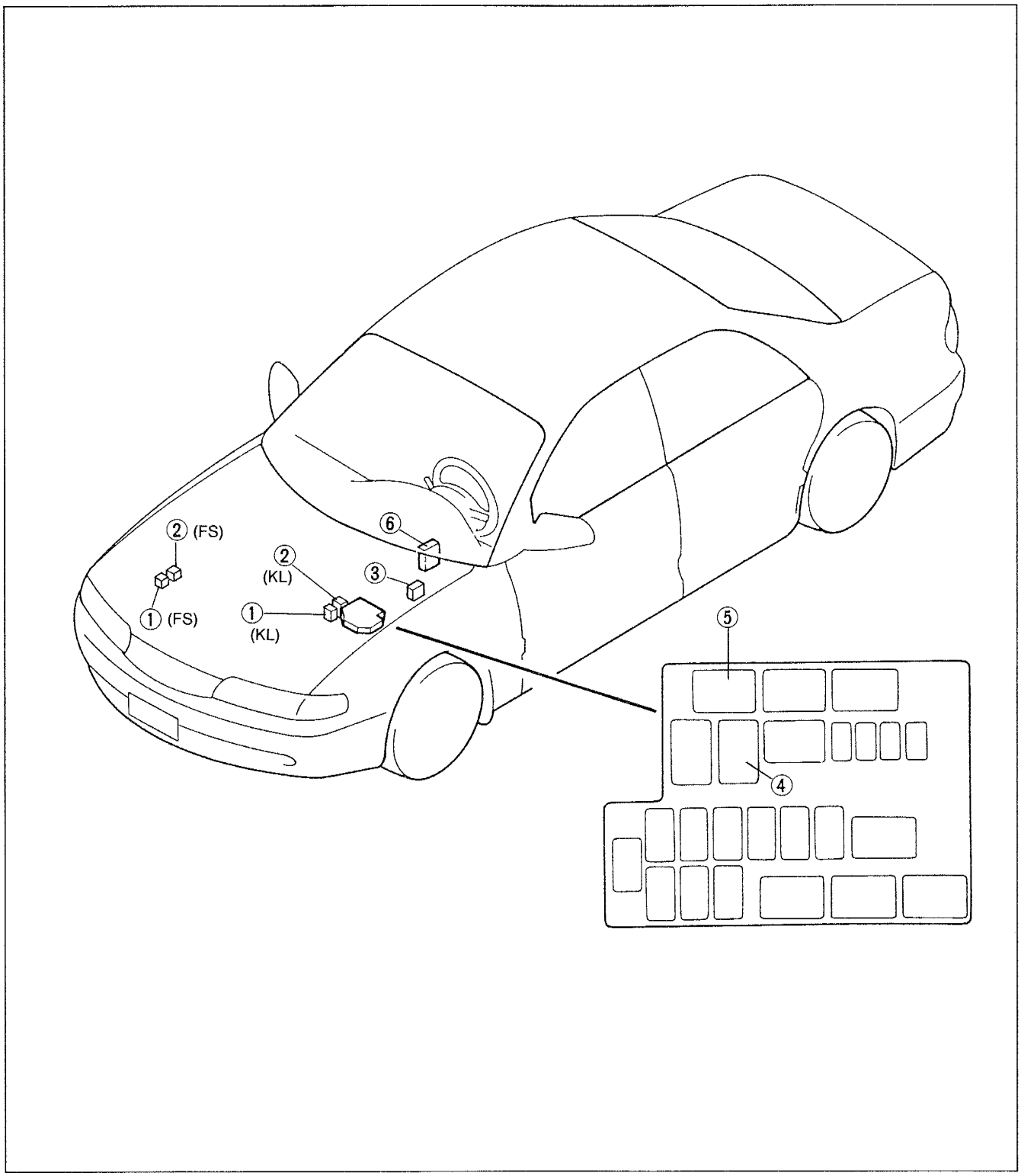

1. Headlight relay
   Inspection .....page Z2–3
2. Rear window defroster relay
   Inspection .....page Z2–3
3. TNS relay
   Inspection .....page Z2–3
4. Horn relay
   Inspection .....page Z2–3
5. DRL relay [Canada]
   Inspection .....page Z2–4
6. Flasher unit
   Inspection .....section F

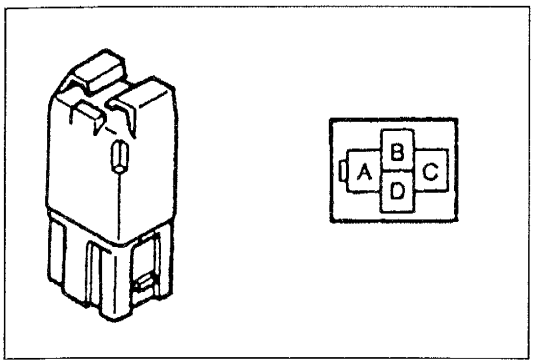

HORN RELAY

Inspection

1. Check for continuity between the terminals of the horn relay.

O–O : Continuity B+: Battery positive voltage

Step	Terminal B	Terminal D	Terminal A	Terminal C
1	O	O		
2	B+	GND	O	O

2. If not as specified, replace the horn relay.

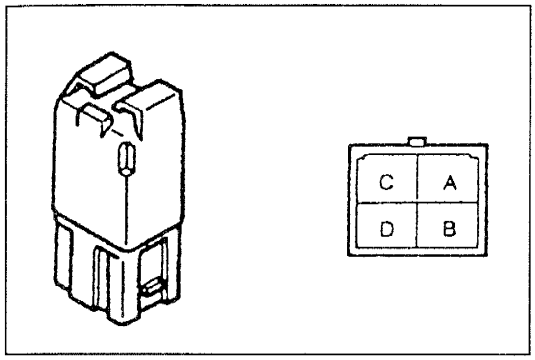

TNS RELAY

Inspection

1. Check for continuity between the terminals of the TNS relay.

O–O : Continuity B+: Battery positive voltage

Step	Terminal A	Terminal B	Terminal C	Terminal D
1	O	O		
2	B+	GND	O	O

2. If not as specified, replace the TNS relay.

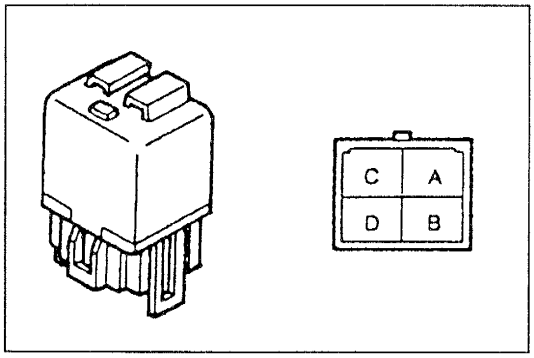

HEADLIGHT RELAY

Inspection

1. Check for continuity between the terminals of the headlight relay.

O–O : Continuity B+: Battery positive voltage

Step	Terminal A	Terminal B	Terminal C	Terminal D
1	O	O		
2	B+	GND	O	O

2. If not as specified, replace the headlight relay.

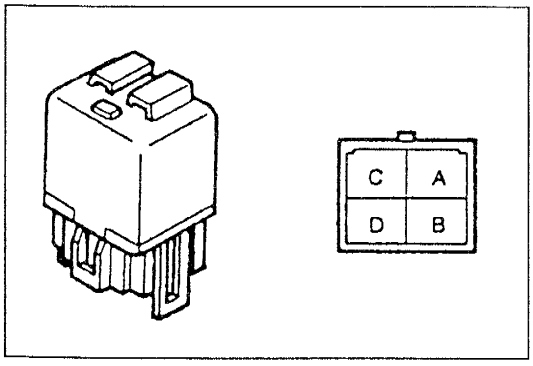

REAR WINDOW DEFROSTER RELAY

Inspection

1. Check for continuity between the terminals of the rear window defroster relay.

O–O : Continuity B+: Battery positive voltage

Step	Terminal A	Terminal B	Terminal C	Terminal D
1	O	O		
2	B+	GND	O	O

2. If not as specified, replace the rear window defroster relay.

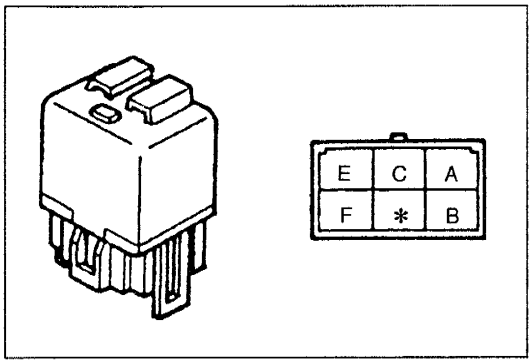

DRL RELAY [CANADA]

Inspection

1. Check for continuity between the terminals of the DRL relay.

○–○ : Continuity B+: Battery positive voltage

	Terminal				
Step	A	B	E	C	F
1	○—○			○—○	
2	GND	B+	○—○		

2. If not as specified, replace the DRL relay.

Before beginning any service procedure, refer to section S of this manual for air bag system service warnings.

CPU

CPU

STRUCTURAL VIEW

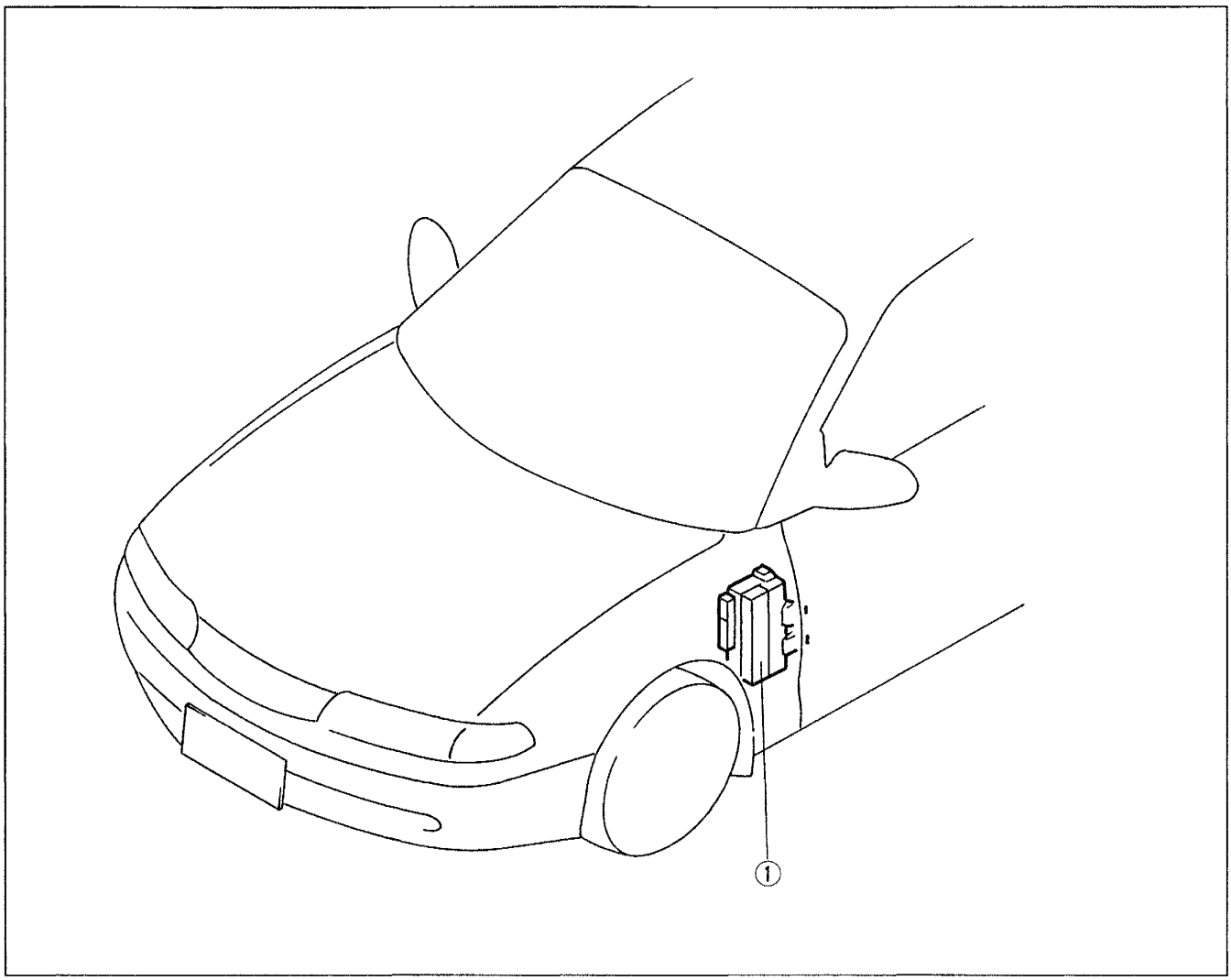

1. CPU
   Removal / Installation ..... page Z3–3
   Inspection ..... page Z3–3

OUTLINE

- The CPU is attached to the joint box near the driver's feet.
- A microcomputer is used by the CPU to control all electrical component functions, thus increasing reliability.

QUICK REFERENCE

Function		Reference page
Seat belt warning system		section C2
Rear window defroster		section I1
Power door lock system		section K2
Keyless entry system		section K3
Theft-deterrent system		section T3
Warning alarm	Lights-on reminder	section C2
	Key reminder	
	Seat belt reminder	

CPU

Removal / Installation

1. Disconnect the negative battery cable.
2. Remove the scuff plate and front side trim.
   (Refer to the 1996 626/MX-6 Workshop Manual, section S.)
3. Remove in the order shown in the figure.
4. Install in the reverse order of removal.

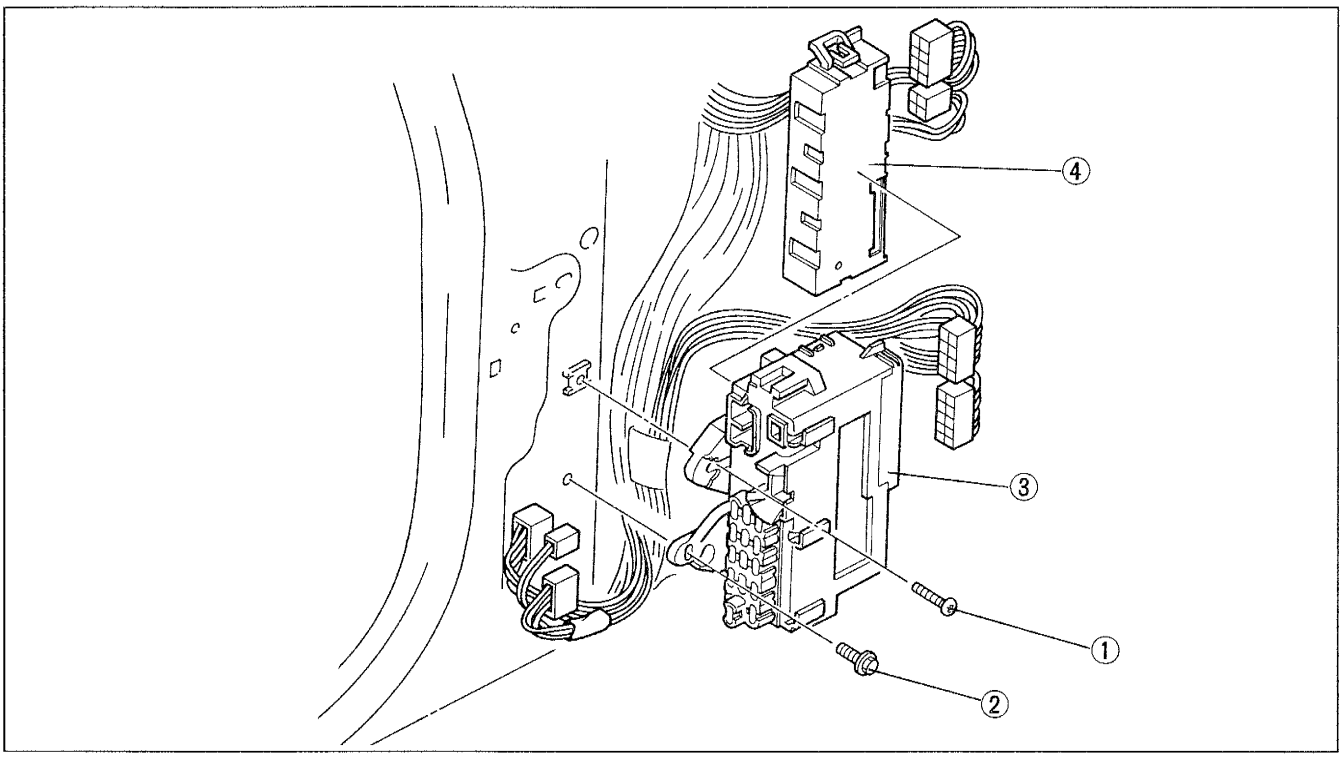

1. Screw
2. Bolt
3. Joint box
4. CPU
   Inspection ..... below

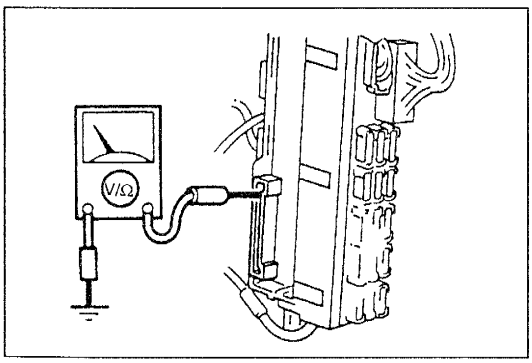

Inspection

Connector A

1. Remove the CPU from the joint box.
2. Measure the voltage at the CPU terminals from the joint box side, referring to the terminal voltage list on page Z3–4.
3. If not as specified, inspect the parts listed under "Inspection area" and the related wiring harnesses.
4. If the parts and wiring harnesses are OK but the system still does not work properly, replace the CPU.

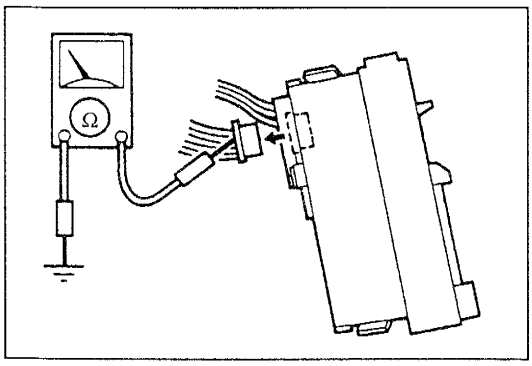

Connector B

1. Follow the appropriate procedure, referring to the terminal voltage list on page Z3–5.

Terminals 2H, 2N, and 2T

(1) Disconnect the CPU connector.
(2) Check for continuity between the terminals of the CPU connector and ground.

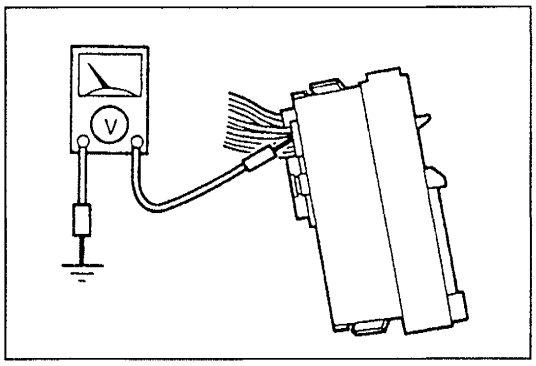

Terminals except 2H, 2N, and 2T

(1) Install the CPU onto the joint box.
(2) Measure the voltage at the CPU terminals.

2. If not as specified, inspect the parts listed under "Inspection area" and the related wiring harnesses.
3. If the parts and wiring harnesses are OK but the system still does not work properly, replace the CPU.

Terminal voltage list

B+: Battery positive voltage

CONNECTOR A

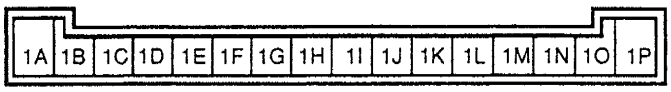

Terminal	Signal	Connection	Test condition		Voltage / Continuity	Inspection area
1A	IG1	METER 15A fuse	Ignition switch at ON		B+	METER 15A fuse
1B	—	—	—		—	—
1C	+B	ROOM 15A fuse	Constant		B+	ROOM 15A fuse
1D	CPU ground	GND	Constant: check for continuity to ground		Yes	—
1E	Door open/closed	Door switch	Any door open: check for continuity to ground		Yes	Door switch
			All doors closed: check for continuity to ground		No	
1F	Courtesy light	Courtesy light	Constant		B+	• ROOM 15A fuse • Courtesy light
1G	—	—	—		—	—
1H	—	—	—		—	—
1I	Key inserted	Key reminder switch	Key inserted into steering lock		B+	• ROOM 15A fuse • Key reminder switch
			Key removed from steering lock		0 V	
1J	—	—	—		—	—
1K	Seat belt warning	• Seat belt warning light • Buckle switch	Ignition switch at ON	Seat belt fastened	B+	• METER 15A fuse • Seat belt warning light • Buckle switch
				Seat belt unfastened	0 V	
1L	—	—	—		—	—
1M	—	—	—		—	—
1N	—	—	—		—	—
1O	—	—	—		—	—
1P	TNS	TNS relay	Headlight switch at first position		B+	• TAIL 15A fuse • TNS relay

B+: Battery positive voltage

CONNECTOR B

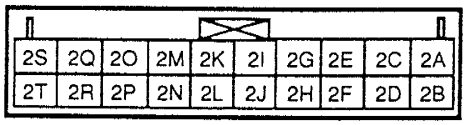

Terminal	Signal		Connection	Test condition		Voltage / Continuity	Inspection area
2A	Horn output		Horn relay	Horn switch on		0 V	• STOP 20A fuse • Horn relay
				Other		B+	
2B	Headlight output		Headlight relay	Headlight switch on		0 V	• HEAD 30A fuse • Headlight relay
				Other		B+	
2C	Starter cut		Starter cut relay	Ignition switch at ON		B+	Starter cut relay
2D	Security light		Security light	Security light illuminated		0 V	• ROOM 15A fuse • Instrument cluster
				Other		B+	
2E	Power door lock control		Door lock timer unit	For 0.4 seconds after driver's lock-link switch is unlocked		0 V	• DOOR LOCK 30A fuse • Door lock timer unit
				Other		B+	
2F	—		—	—		—	—
2G	Power door lock control		Door lock timer unit	For 0.4 seconds after driver's lock-link switch is locked		0 V	• DOOR LOCK 30A fuse • Door lock timer unit
				Other		B+	
2H	626	—	—	—		—	—
	MX-6	Trunk lid locked/ unlocked	Trunk key cylinder switch	Unlocked: check for continuity to ground		Yes	Trunk key cylinder switch
				Other: check for continuity to ground		No	
2I	Power door lock control		Door lock timer unit	For 0.4 seconds after transmitter UNLOCK button is pressed		0 V	• DOOR LOCK 30A fuse • Door lock timer unit
				Other		B+	
2J	Trunk lid open/ closed		Trunk compartment light switch	Trunk lid open		0 V	• ROOM 15A fuse • Trunk compartment light • Trunk compartment light switch
				Trunk lid closed		B+	
2K	Door locked/ unlocked		Door lock-link switch (driver)	Locked		B+	• ROOM 15A fuse • Door lock assembly
				Unlocked		0 V	
2L	—		—	—		—	—
2M	Hazard warning output		Flasher unit	Hazard warning switch on		0 V	• HAZARD 15A fuse • Flasher unit
				Other		B+	
2N	Hood open/closed		Hood switch	Hood open: check for continuity to ground		No	Hood switch
				Hood closed: check for continuity to ground		Yes	
2O	Trunk keyless		Trunk lid opener relay	For 0.4 seconds after transmitter TRUNK button pressed		0 V	Trunk lid opener relay
				Other		B+	
2P	—		—	—		—	—
2Q	Rear window defroster		Rear window defroster indicator light	Ignition switch at ON	Rear window defroster switch on	0 V	• METER 15A fuse • Instrument cluster
					Other	B+	

B+: Battery positive voltage

Terminal	Signal	Connection	Test condition		Voltage / Continuity	Inspection area
2R	Keyless	Keyless unit	For 0.3 seconds after transmitter LOCK button is pressed		4 V	• ROOM 15A fuse • Keyless unit
			For 0.3 seconds after transmitter UNLOCK button is pressed		2 V	
			For 0.3 seconds after transmitter TRUNK button is pressed		0 V	
			Other		5 V	
2S	Rear window defroster	Rear window defroster relay	Ignition switch at ON	Rear window defroster switch on	0 V	• ENGINE 15A fuse • Rear window defroster relay
				Other	B+	
2T	Rear window defroster	Rear window defroster switch	Rear window defroster switch on: check for continuity to ground		Yes	Rear window defroster switch
			Rear window defroster switch off: check for continuity to ground		No	

Before beginning any service procedure, refer to section S of this manual for air bag system service warnings.

SWITCHES

SWITCHES

STRUCTURAL VIEW

626

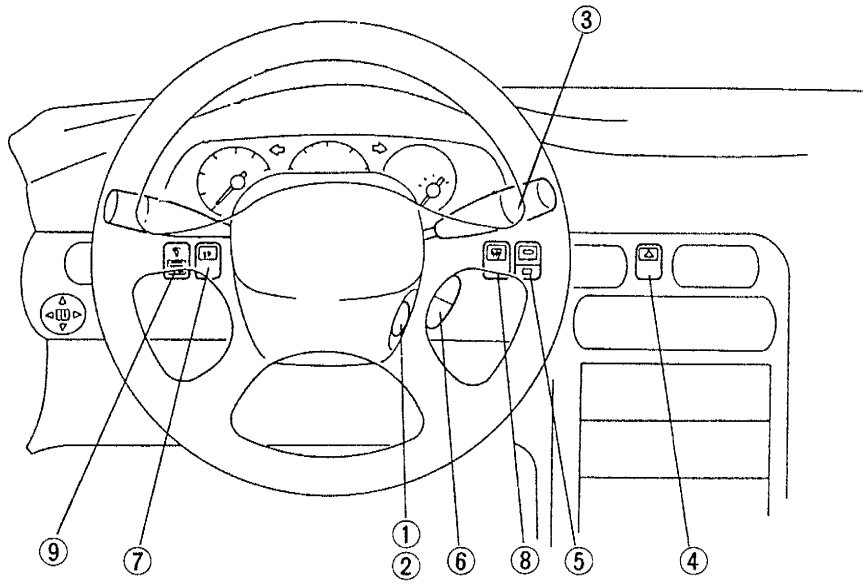

MX-6

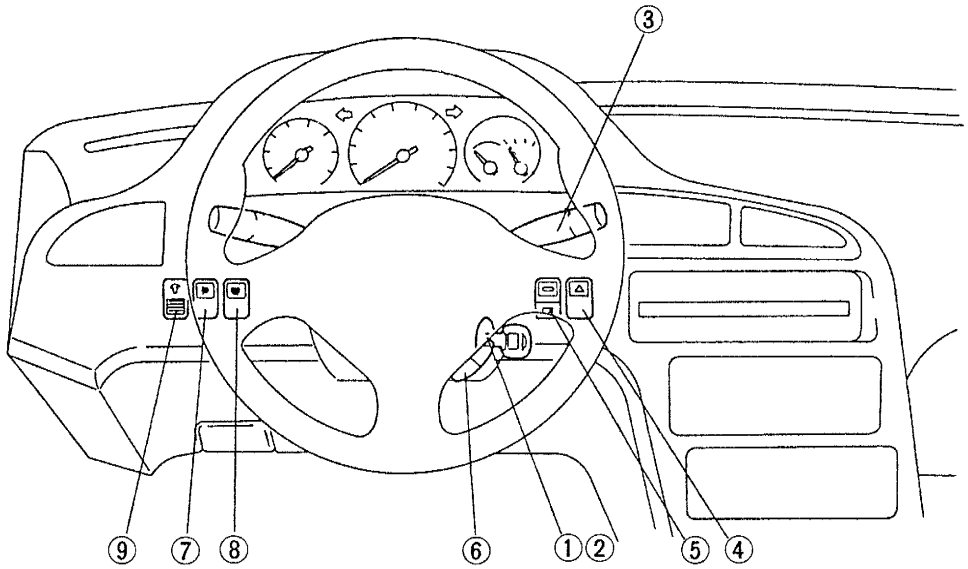

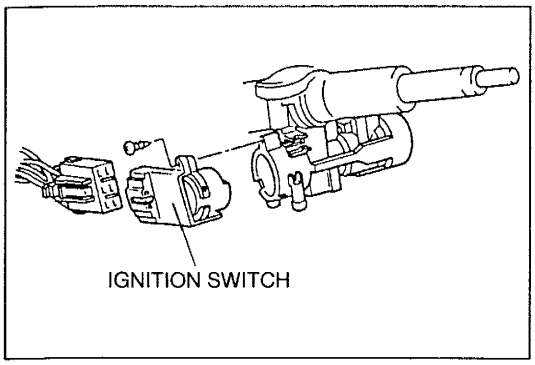

IGNITION SWITCH

Removal / Installation

1. Disconnect the negative battery cable.
2. Remove the column cover.
   (Refer to the 1996 626/MX-6 Workshop Manual, section S.)
3. Disconnect the ignition switch connector.
4. Remove the screw and the ignition switch.
5. Install in the reverse order of removal.

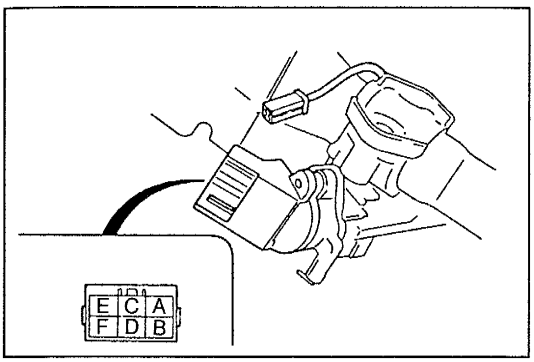

Inspection

1. Remove the column cover.
   (Refer to the 1996 626/MX-6 Workshop Manual, section S.)
2. Disconnect the ignition switch connector.
3. Check for continuity between the terminals of the ignition switch.

O–O : Continuity

Switch position \ Terminal	C	D	F	B	A	E
LOCK						
ACC	O		O			
ON	O	O	O	O	O	
START	O	O		O		O

4. If not as specified, replace the ignition switch.

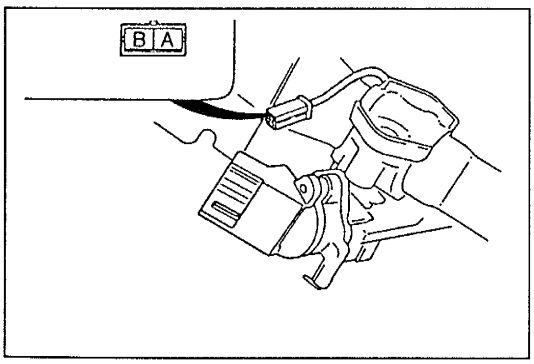

KEY REMINDER SWITCH

Inspection

1. Remove the column cover.
   (Refer to the 1996 626/MX-6 Workshop Manual, section S.)
2. Disconnect the key reminder switch connector.
3. Check for continuity between the terminals of the key reminder switch.

O–O : Continuity

Switch condition \ Terminal	A	B
Key inserted	O	O
Key removed		

4. If not as specified, replace the steering lock.
   (Refer to the 1996 626/MX-6 Workshop Manual, section N.)

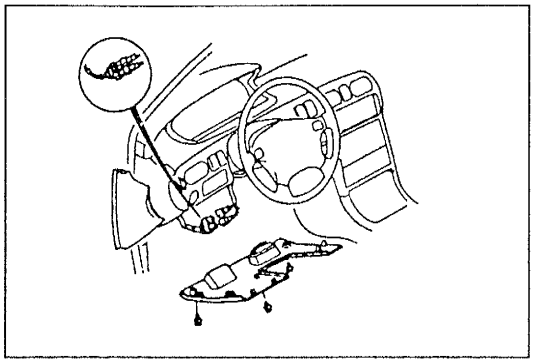

COMBINATION SWITCH

Removal / Installation

1. Disconnect the negative battery cable.
2. Remove the driver-side side panel and lower panel.
3. Disconnect the clock spring connector.

Warning

- **Handling the air bag module improperly can accidentally deploy the air bag, which may seriously injure you. Read SERVICE WARNINGS, section S, before handling the air bag module.**

4. Remove in the order shown in the figure.
5. Install in the reverse order of removal.

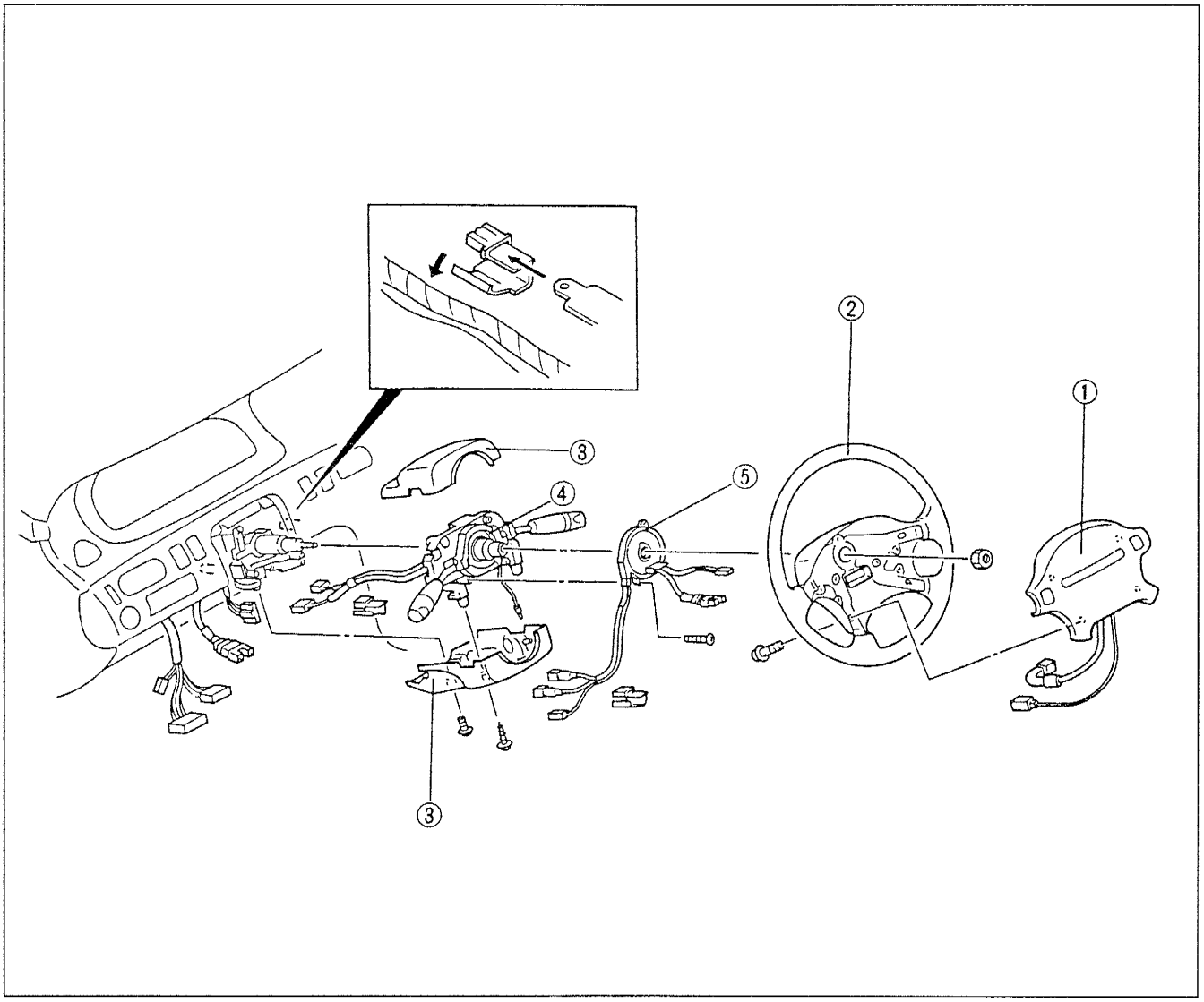

1. Air bag module
   Removal / Installation ..... section S
2. Steering wheel
3. Column cover
   Removal / Installation
   ..... 1996 Mazda 626/MX-6
   Workshop Manual, section S
4. Combination switch
   Inspection ..... page Z4–5
   Adjustment ..... page Z4–6
5. Clock spring
   Inspection ..... section S

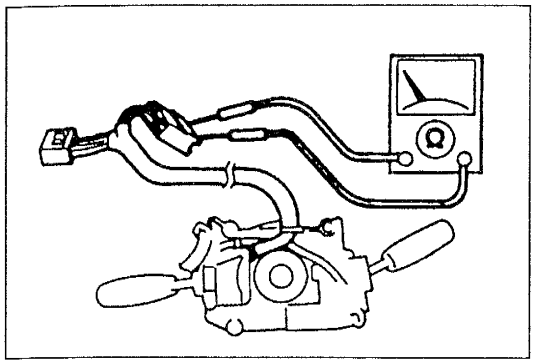

Inspection

1. Remove the combination switch. (Refer to page Z4–4.)
2. Check for continuity between the terminals of each switch.

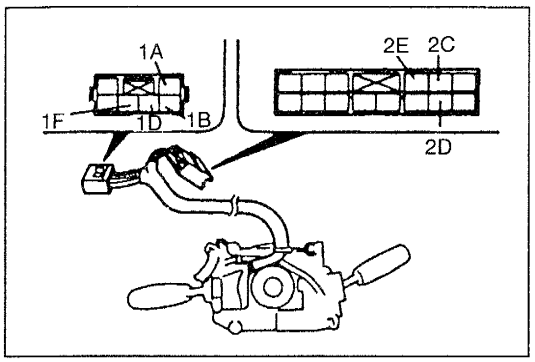

Headlight switch

○–○ : Continuity

Switch position \ Terminal		2E	2C	2D	1F	1A	1B	1D
OFF								
	Flash-to-pass						○	○
TNS		○	○					
	Flash-to-pass	○	○				○	○
Head-light	HI	○	○	○	○		○	
	LO	○	○	○	○	○		
	Flash-to-pass	○	○	○			○	○

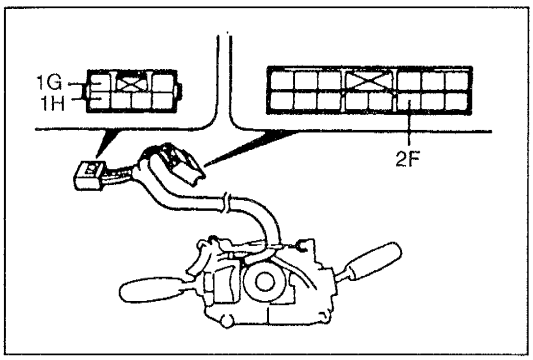

Turn switch

○–○ : Continuity

Switch position \ Terminal	2F	1G	1H
Left	○	○	
OFF			
Right	○		○

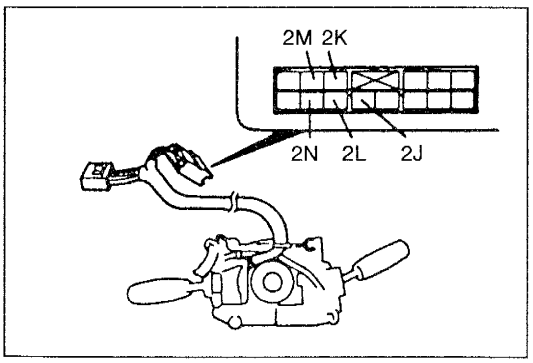

Windshield wiper and washer switch

○–○ : Continuity

Switch position \ Terminal	2K	2N	2L	2J	2M
OFF	○	○			
One-touch			○	○	
INT	○	○			
LO		○		○	
HI			○	○	
Washer				○	○

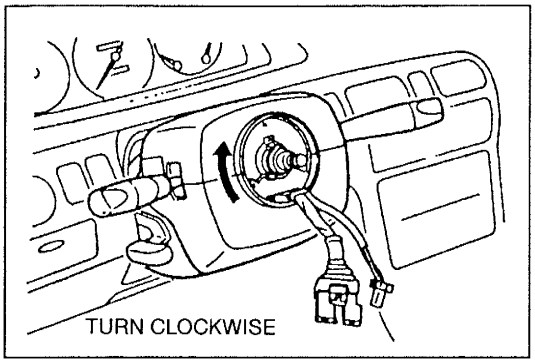

Adjustment
Clock spring
Before installing the steering wheel, adjust the clock spring connector as follows:
1. Set the front wheels straight ahead.
2. Turn the clock spring connector clockwise until it stops. (Do not force it.)

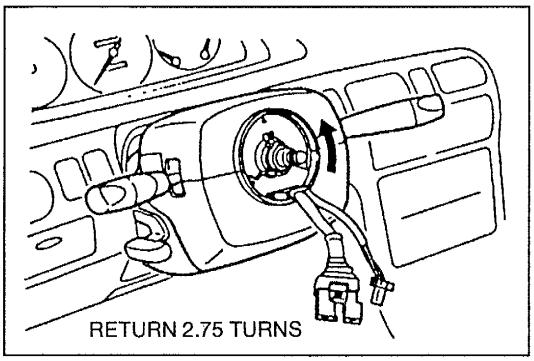

3. Return the connector 2.75 turns.

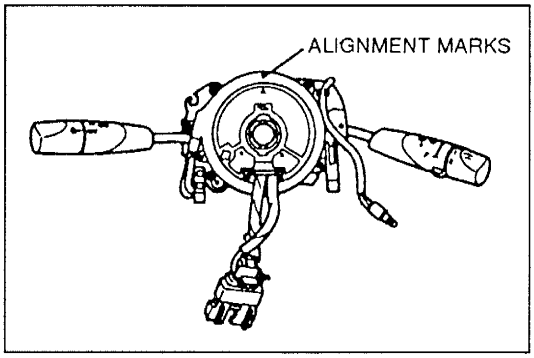

4. Align the marks on the clock spring connector to the marks on the outer housing.

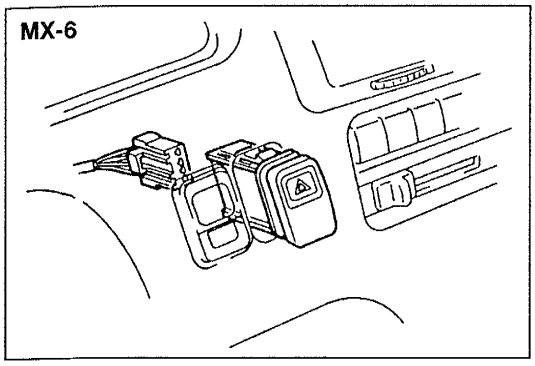

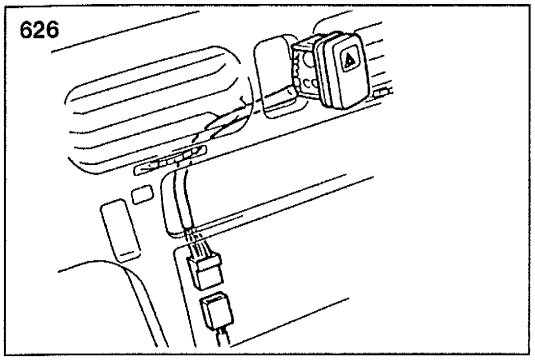

HAZARD WARNING SWITCH

Removal / Installation

1. Remove the switch panel.
   (Refer to the 1996 626 MX-6 Workshop Manual, section S.)
2. Remove the hazard warning switch.
3. Install in the reverse order of removal.

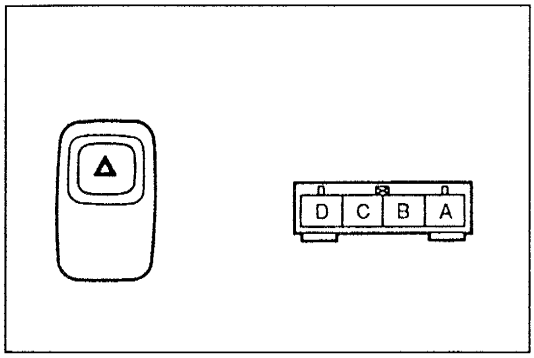

Inspection

1. Remove the hazard warning switch.
2. Check for continuity between the terminals of the hazard warning switch.

O–O : Continuity O–⊗–O : Bulb

Terminal / Switch position	A	B	C	D
OFF			O–⊗–O	
ON	O–O		O–⊗–O	

3. If not as specified, replace the hazard warning switch.

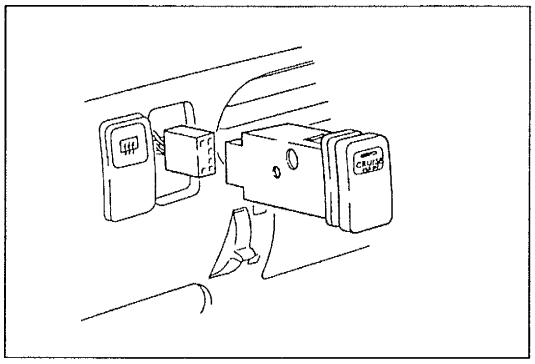

CRUISE CONTROL MAIN SWITCH

Removal / Installation

1. Remove the switch panel.
   (Refer to the 1996 626/MX-6 Workshop Manual, section S.)
2. Disconnect the cruise control main switch connector.
3. Remove the cruise control main switch.
4. Install in the reverse order of removal.

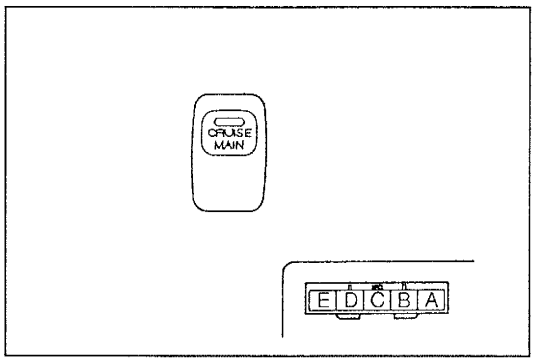

Inspection

1. Remove the cruise control main switch.
2. Check for continuity between the terminals of the cruise main switch.

○—○ : Continuity ○—ⓑ—○ : Bulb

Switch position \ Terminal	A	B	C	D	E
Push	○—ⓑ—○		○	○—ⓑ—○	
Others	○—ⓑ—○			○—ⓑ—○	

3. If not as specified, replace the cruise control main switch.

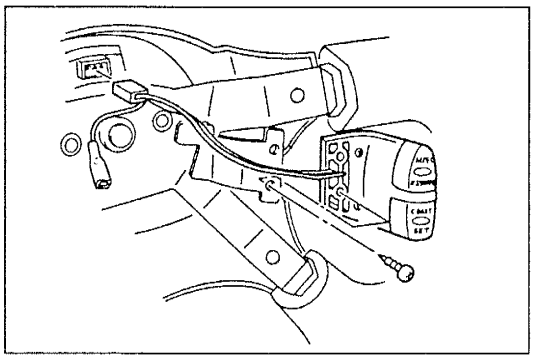

CRUISE CONTROL SWITCH

Removal / Installation

Warning

- **Handling the air bag module improperly can accidentally deploy the air bag, which may seriously injure you. Read SERVICE WARNINGS, section S, before handling the air bag module.**

1. Remove the air bag module.
   (Refer to section S.)
2. Disconnect the cruise control switch connector.
3. Remove the screws and the cruise control switch.
4. Install in the reverse order of removal.

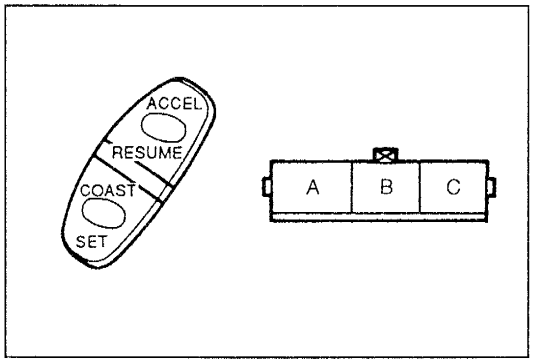

Inspection

1. Disconnect the cruise control switch connector.
2. Measure the resistance between the terminals of the cruise control switch.

R1: 240Ω R2: 910Ω

Switch position \ Terminal	A	B
Normal		
SET/COAST	○—R1—○	
RESUME/ACCEL	○—R2—○	

3. If not as specified, replace the cruise control switch.

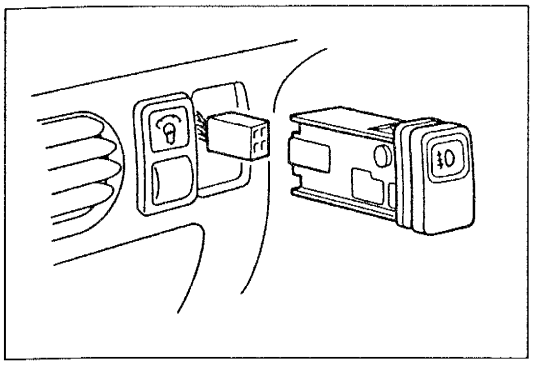

FRONT FOG LIGHT SWITCH

Removal / Installation

1. Remove the switch panel.
   (Refer to the 1996 626/MX-6 Workshop Manual, section S.)
2. Disconnect the front fog light switch connector.
3. Remove the front fog light switch.
4. Install in the reverse order of removal.

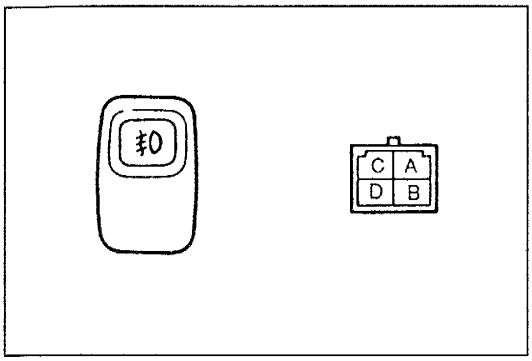

Inspection

1. Remove the front fog light switch.
2. Check for continuity between the terminals of the front fog light switch.

O—O : Continuity O—⊗—O : Bulb

Terminal / Switch position	A	C	B	D
OFF	O—⊗—O			
ON	O—⊗—O		O—	—O

3. If not as specified, replace the front fog light switch.

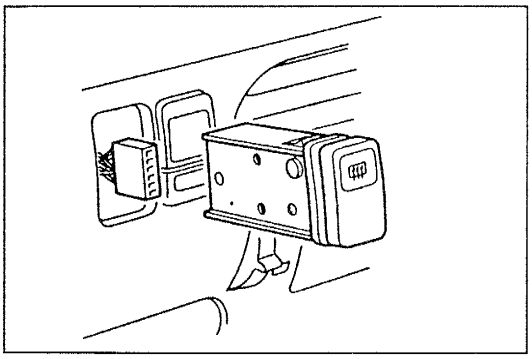

REAR WINDOW DEFROSTER SWITCH

Removal / Installation

1. Remove the switch panel.
   (Refer to the 1996 626/MX-6 Workshop Manual, section S.)
2. Disconnect the rear window defroster switch connector.
3. Remove the rear window defroster switch.
4. Install in the reverse order of removal.

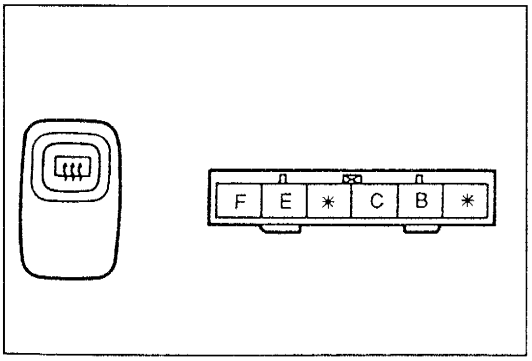

Inspection

1. Remove the rear window defroster switch.
2. Check for continuity between the terminals of the rear window defroster switch.

O—O : Continuity O—⊗—O : Bulb

Terminal / Switch position	B	C	E	F
OFF			O—	⊗—O
ON	O—	—O	O—	⊗—O

3. If not as specified, replace the rear window defroster switch.

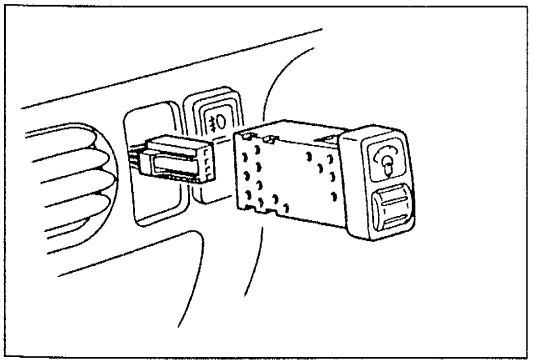

PANEL LIGHT CONTROL SWITCH

Removal / Installation

1. Remove the switch panel.
   (Refer to the 1996 626/MX-6 Workshop Manual, section S.)
2. Disconnect the panel light control switch connector.
3. Remove the panel light control switch.
4. Install in the reverse order of removal.

Before beginning any service procedure, refer to section S of this manual for air bag system service warnings.

INSTRUMENT CLUSTER

INSTRUMENT CLUSTER

PREPARATION
SST

49 0839 285 Checker, fuel thermometer	For inspection of fuel and water temperature gauges	49 T088 0A0 NGS set	For inspection of tachometer
49 T088 002 Vehicle Interface Module (Part of 49 T088 0A0)	For inspection of tachometer	49 T088 010B Program Card	For inspection of tachometer
49 T088 001 Control Unit (Part of 49 T088 0A0)	For inspection of tachometer	49 T088 004 NGS OBD II Adapter (Part of 49 T088 0A0)	For inspection of tachometer
49 T088 006 Battery Hookup Adapter (Part of 49 T088 0A0)	For inspection of tachometer	49 T088 008A Instruction Manual	For inspection of tachometer

STRUCTURAL VIEW

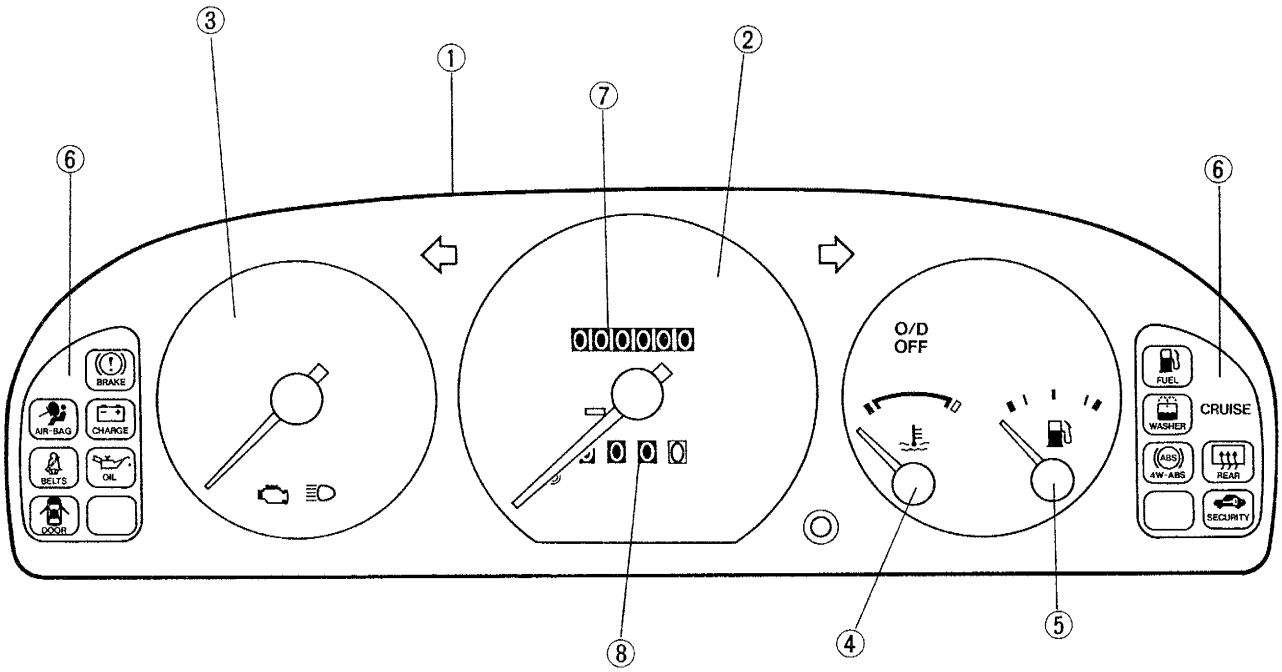

1. Instrument cluster
   Removal / Installation .....page C1–14
   Disassembly / Assembly .....page C1–16
2. Speedometer
   Inspection .....page C1–17
3. Tachometer
   Inspection .....page C1–17
4. Water temperature gauge
   Inspection .....page C1–18
5. Fuel gauge
   Inspection .....page C1–17
6. Warning and indicator lights
   Inspection.....section C2
7. Odometer
8. Tripmeter

SYSTEM DIAGRAM

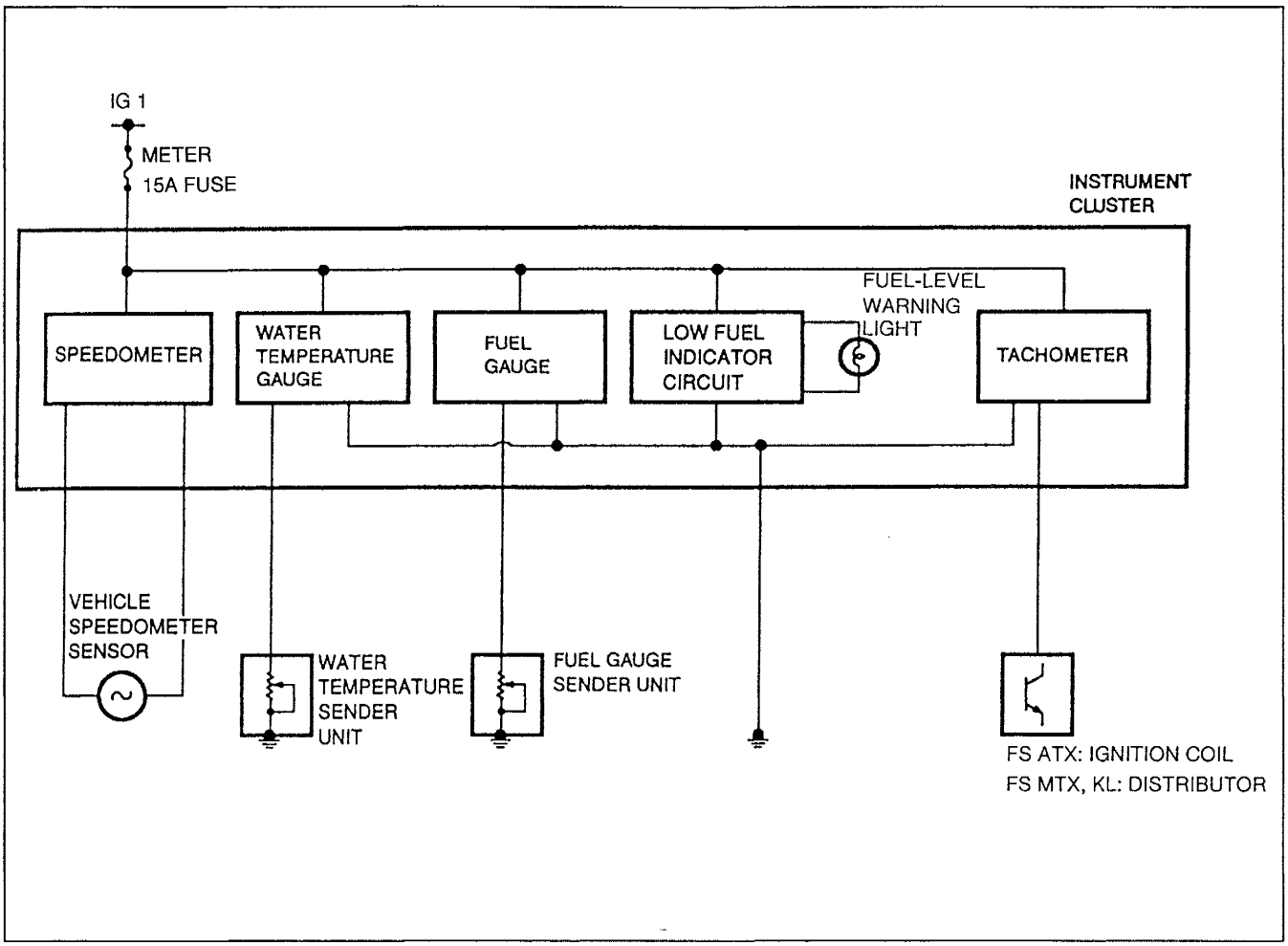

Description

The instrument cluster consists of a tachometer, speedometer/odometer/tripmeter, water temperature gauge, and fuel gauge. These gauges receive signals from the distributor, vehicle speedometer sensor, water temperature sender unit, and fuel gauge sender unit.

System Operation

- **Tachometer**
  When the ignition switch is at ON, battery power is applied to the tachometer. When the engine is running, frequency pulses corresponding to engine speed are sent from the distributor to the tachometer.

- **Speedometer**
  When the ignition switch is at ON, battery power is applied to the speedometer. When the vehicle is in motion, an AC voltage signal is sent from the vehicle speedometer sensor to the speedometer. The frequency of this AC voltage signal varies with the vehicle speed.

- **Fuel Gauge**
  When the ignition switch is at ON, battery power is applied to the fuel gauge. The fuel gauge receives a resistance signal from the fuel gauge sender unit. The resistance of the fuel gauge sender unit varies with the level of fuel in the tank.

- **Water Temperature Gauge**
  When the ignition switch is at ON, battery power is applied to the water temperature gauge. The water temperature gauge receives a resistance signal from the water temperature sender unit. The resistance of the water temperature sender unit varies with the engine coolant temperature.

TROUBLESHOOTING
Circuit Diagram

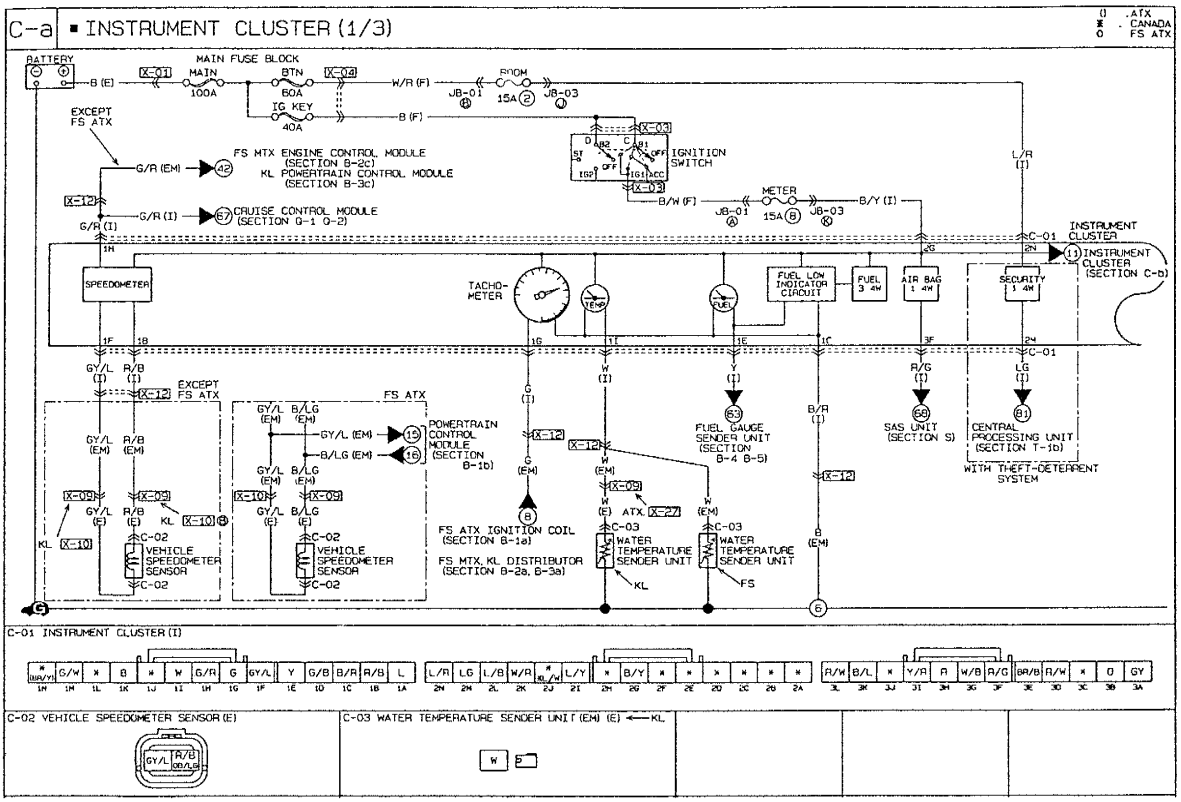

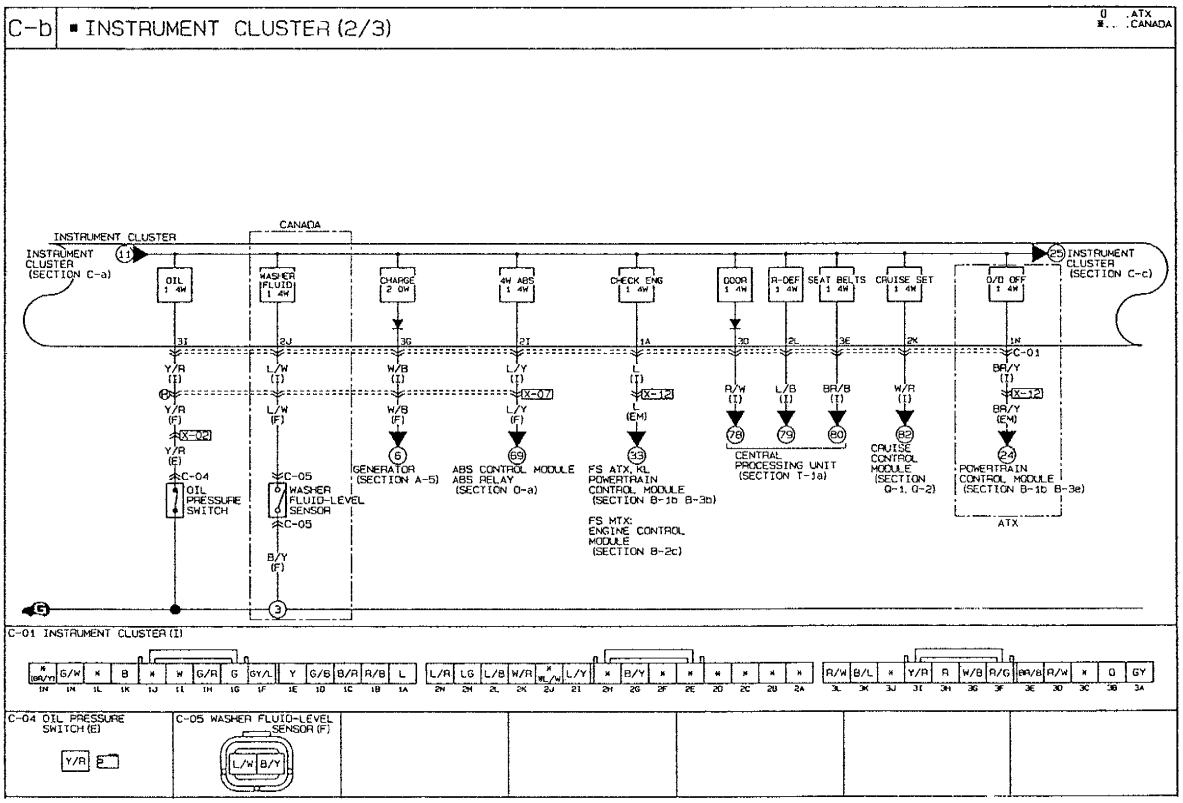

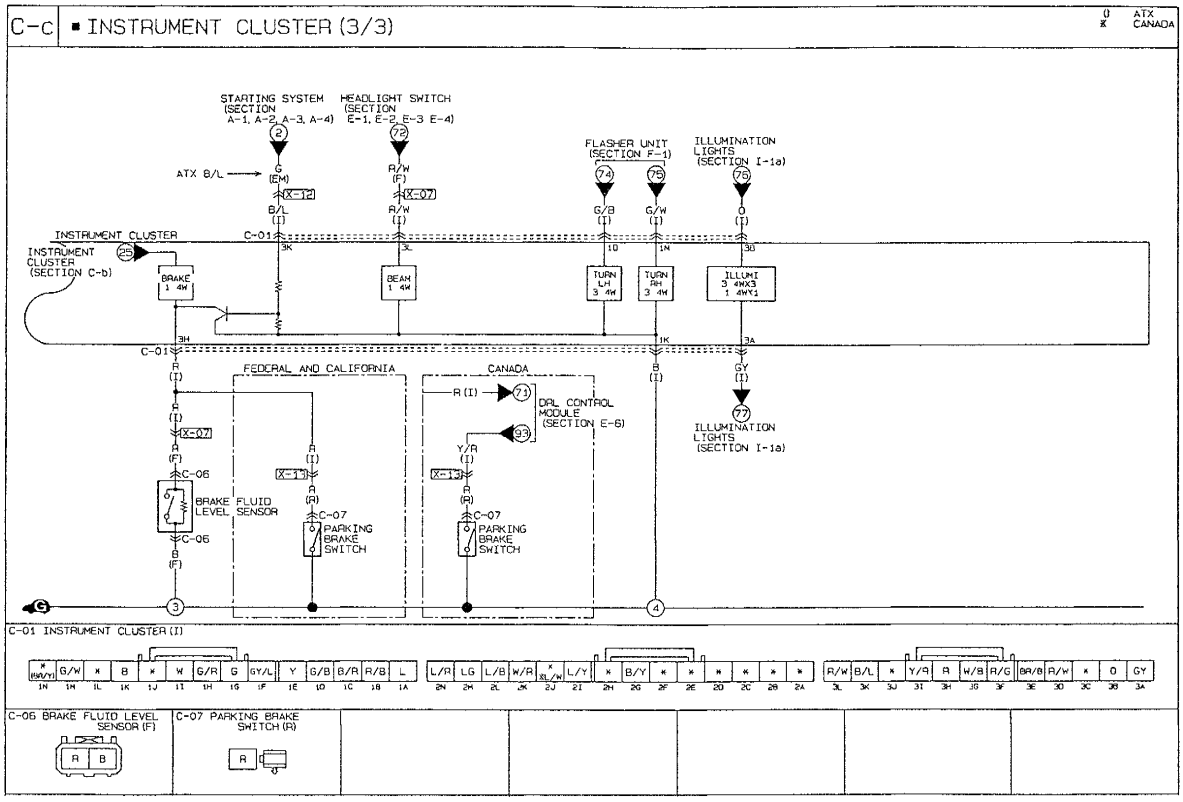
C-c ■ INSTRUMENT CLUSTER (3/3)
ATX CANADA
STARTING SYSTEM (SECTION A-1, A-2, A-3, A-4)
HEADLIGHT SWITCH (SECTION E-1, E-2, E-3 E-4)
FLASHER UNIT (SECTION F-1)
ILLUMINATION LIGHTS (SECTION I-1a)
ATX B/L
INSTRUMENT CLUSTER
INSTRUMENT CLUSTER (SECTION C-b)
BRAKE 1 4W
BEAM 1 4W
TURN LH 3 4W
TURN RH 3 4W
ILLUMI 3 4WX3 1 4WY1
FEDERAL AND CALIFORNIA
CANADA
DRL CONTROL MODULE (SECTION E-6)
ILLUMINATION LIGHTS (SECTION I-1a)
BRAKE FLUID LEVEL SENSOR
PARKING BRAKE SWITCH
C-01 INSTRUMENT CLUSTER (I)
C-06 BRAKE FLUID LEVEL SENSOR (F)
C-07 PARKING BRAKE SWITCH (R)

Connector Locations

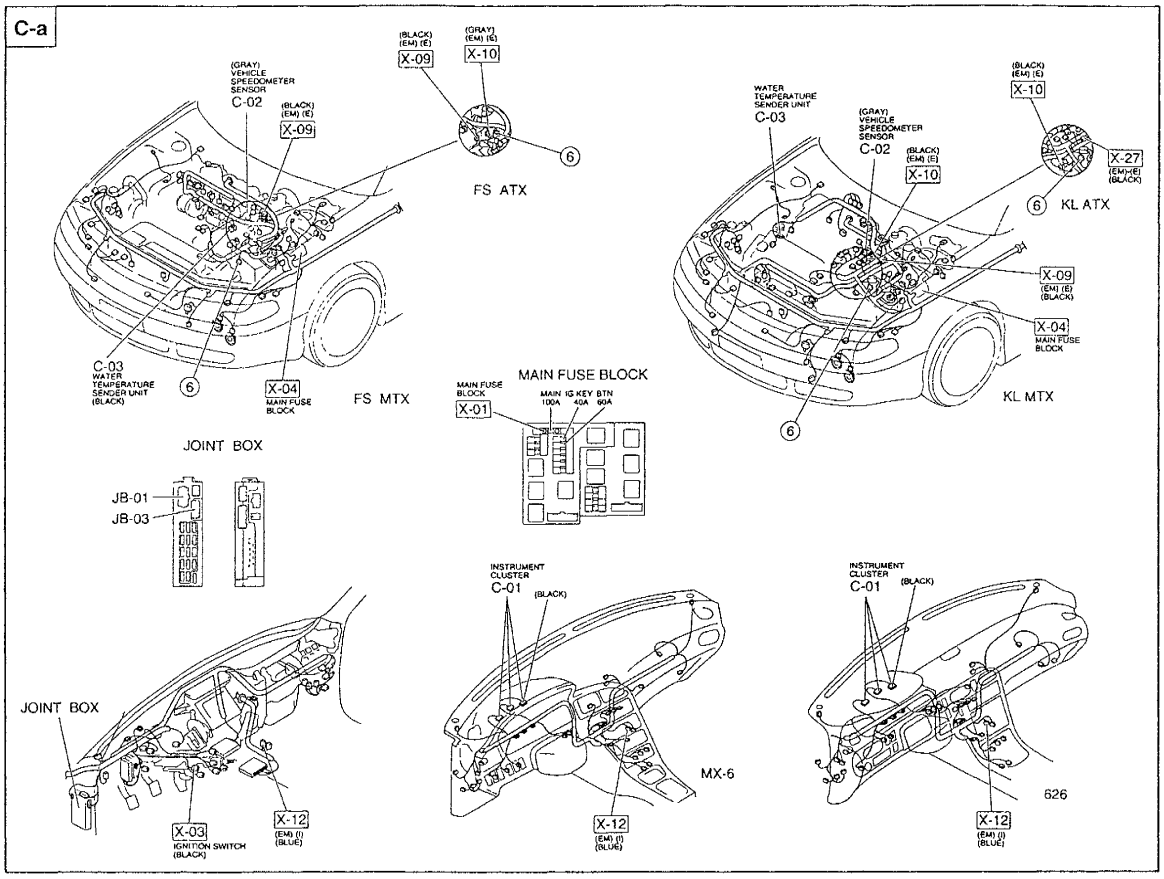

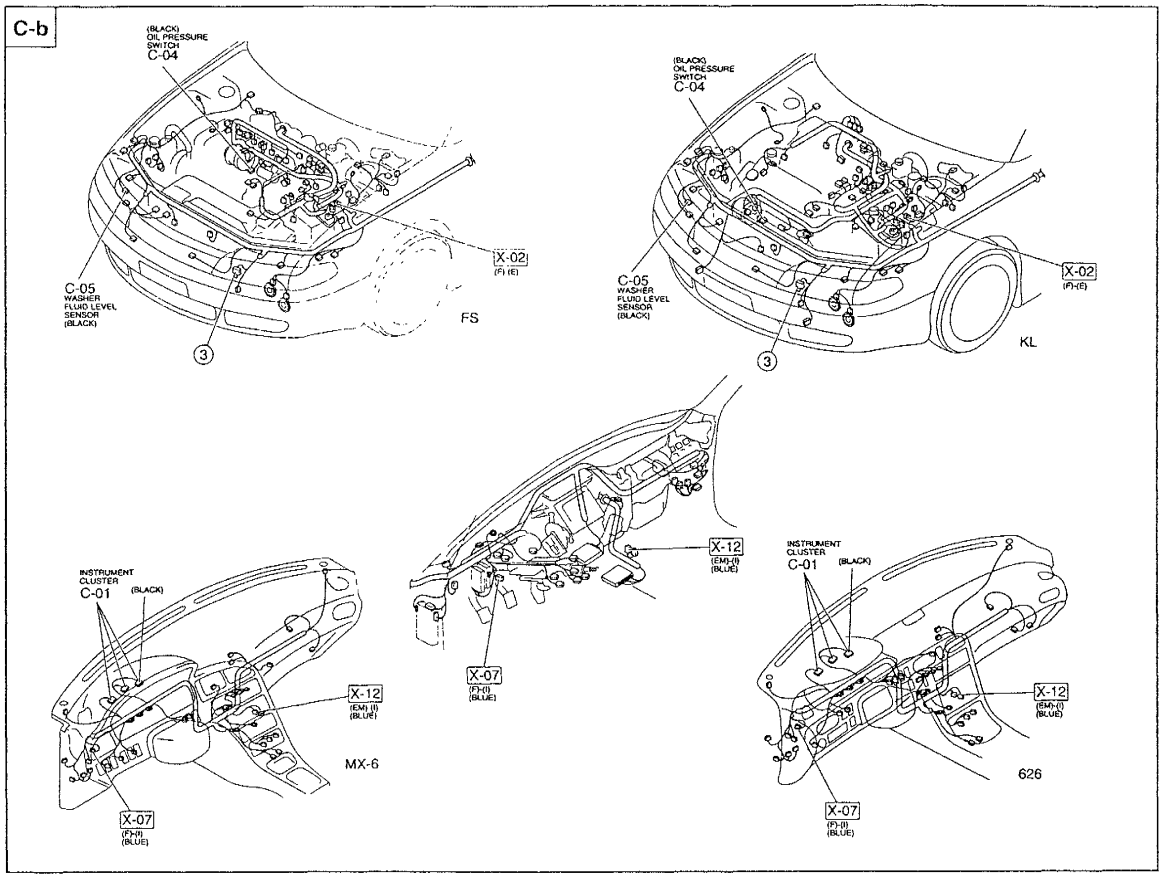

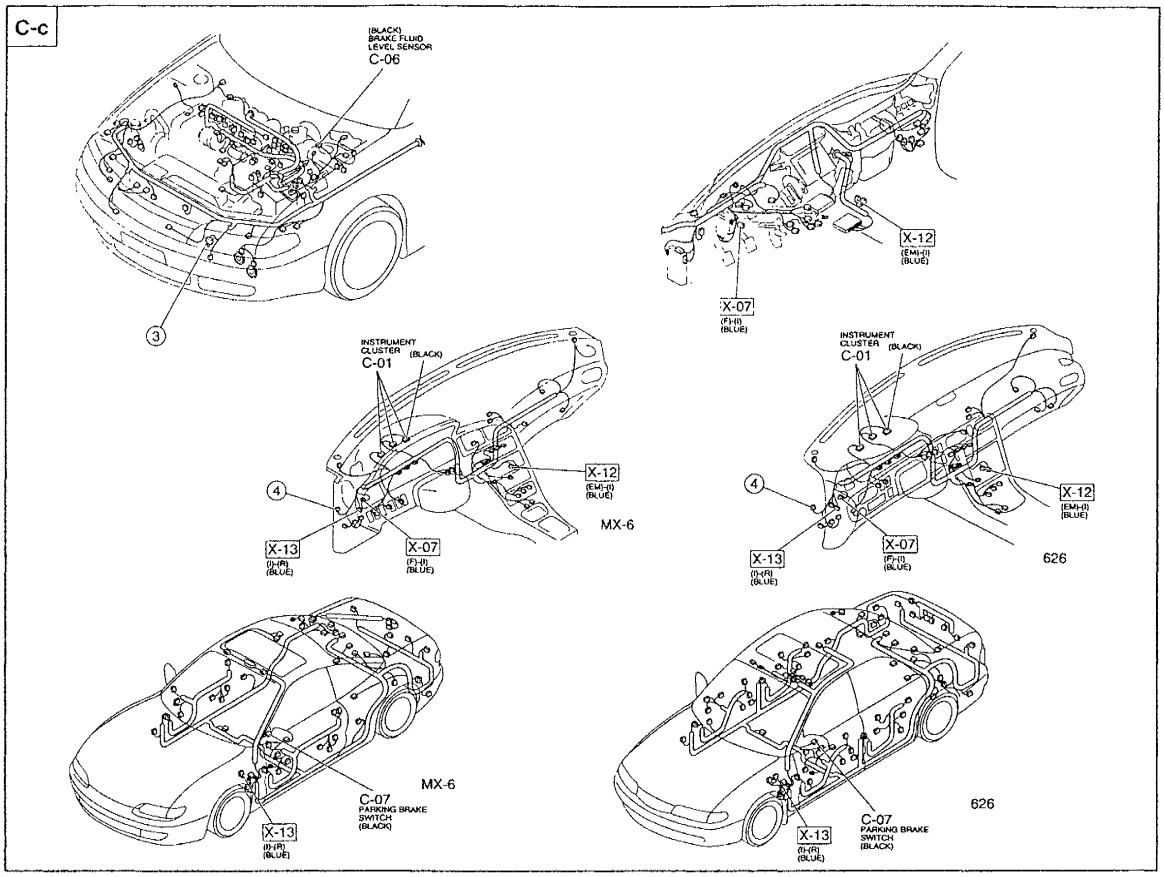
C-c
(BLACK)
BRAKE FLUID
LEVEL SENSOR
C-06
3
X-12
(EM)-(I)
(BLUE)
X-07
(F)-(I)
(BLUE)
INSTRUMENT
CLUSTER
C-01
(BLACK)
4
X-12
(EM)-(I)
(BLUE)
X-13
(I)-(R)
(BLUE)
X-07
(F)-(I)
(BLUE)
MX-6
INSTRUMENT
CLUSTER
C-01
(BLACK)
4
X-12
(EM)-(I)
(BLUE)
X-13
(I)-(R)
(BLUE)
X-07
(F)-(I)
(BLUE)
626
MX-6
C-07
PARKING BRAKE
SWITCH
(BLACK)
X-13
(I)-(R)
(BLUE)
626
C-07
PARKING BRAKE
SWITCH
(BLACK)
X-13
(I)-(R)
(BLUE)

Flowchart No.1	Symptom	All meters and gauges (speedometer, tachometer, water temperature gauge, and fuel gauge) do not operate

Possible cause
- Burnt METER 15A fuse
- Damaged instrument cluster
- Open or short circuit in wiring harness
- Poor connection of connector

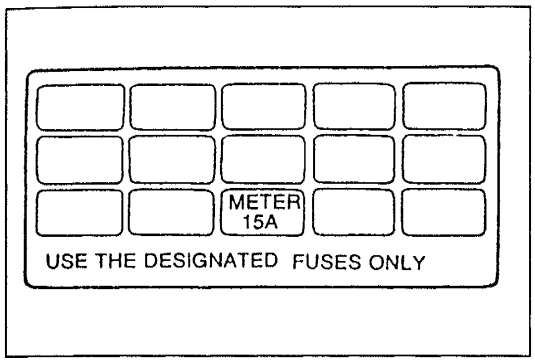

Step 1
Check the METER 15A fuse in the fuse block.

Fuse	Action
OK	Go to Step 2
Burnt	Replace fuse after checking and repairing wiring harness

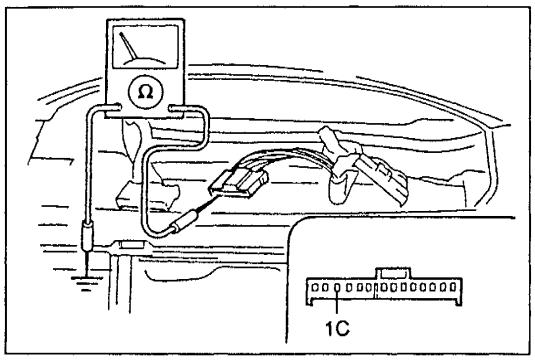

Step 2
1. Remove the instrument cluster.
   (Refer to page C1–14 or C1–15.)
2. Check for continuity between terminal 1C (B/R) of the instrument cluster connector and ground.

Continuity	Action
Yes	Go to Step 3
No	Repair wiring harness (Instrument cluster—GND)

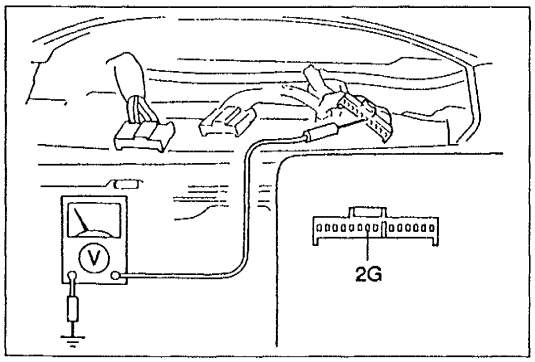

Step 3
1. Turn the ignition switch to ON.
2. Measure the voltage at terminal 2G (B/Y) of the instrument cluster connector.

B+: Battery positive voltage

Voltage	Action
B+	Go to Step 4
Other	Repair wiring harness (METER 15A fuse—Instrument cluster)

Step 4
Refer to the flowchart numbers shown.

Symptom	Flowchart No.	Refer to
Speedometer	2, 3	page C1–10
Tachometer	4	page C1–11
Fuel gauge	5	page C1–12
Water temperature gauge	6	page C1–13

Flowchart No.2	Symptom	Speedometer does not operate

Possible cause
- Damaged speedometer
- Damaged vehicle speedometer sensor
- Open or short circuit in wiring harness
- Poor connection of connector

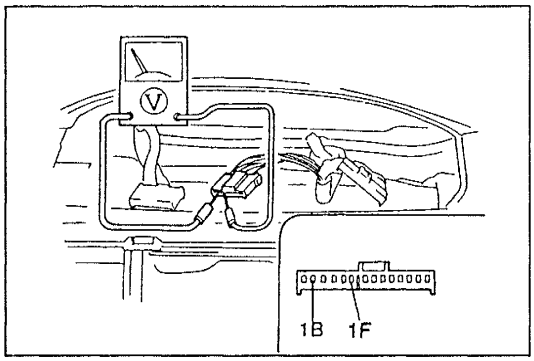

Step 1
1. Remove the instrument cluster.
   (Refer to page C1–14 or C1–15.)
2. Measure the voltage between terminals 1B (R/B) and 1F (GY/L) of the instrument cluster connector while turning the front wheels slowly.

Meter needle	Action
Moves slightly under 5V	Replace speedometer (Refer to page C1–16)
Does not move	Go to Step 2

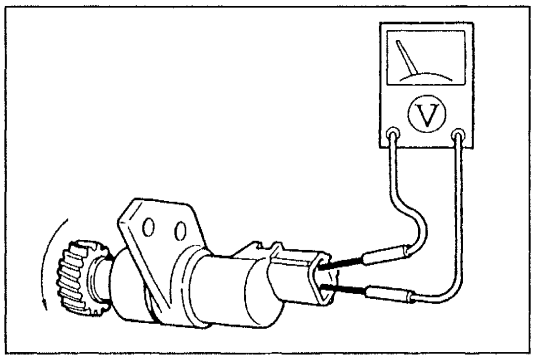

Step 2
1. Remove the vehicle speedometer sensor.
   (Refer to page C1–18.)
2. Measure the voltage between terminals A and B of the vehicle speedometer sensor while rotating the driven gear.

Meter needle	Action
Moves slightly under 5V	Repair wiring harness (Instrument cluster—Vehicle speedometer sensor)
Does not move	Replace vehicle speedometer sensor (Refer to page C1–18)

Flowchart No.3	Symptom	Speedometer needle fluctuates or indication incorrect

Possible cause
- Damaged vehicle speedometer sensor
- Damaged speedometer

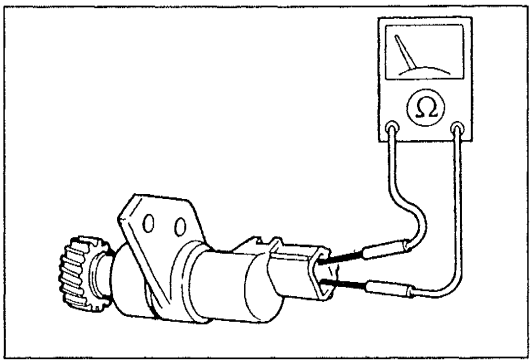

Remedy
1. Remove the vehicle speedometer sensor.
   (Refer to page C1–18.)
2. Turn the tip of the vehicle speedometer sensor and verify that magnetic resistance is felt.
3. Verify that there is resistance between the terminals of the vehicle speedometer sensor and that the resistance is not infinite.

Resistance	Action
Approx. 290 Ω	Replace speedometer (Refer to pages C1–14, or 15 and 16)
Other	Replace vehicle speedometer sensor (Refer to page C1–18)

Flowchart No.4	Symptom	Tachometer does not operate normally

Possible cause
- Damaged tachometer
- Damaged distributor (FS MTX, KL)
- Damaged ignition coil (FS ATX)
- Open or short circuit in wiring harness
- Poor connection of connector

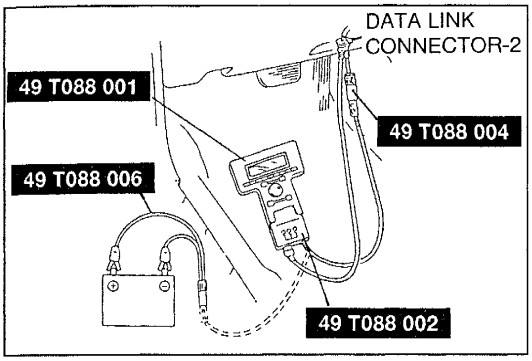

Step 1
1. Connect the **SST** (NGS) to the data link connector-2 and battery.
2. Referring to the NGS instruction manual, select the PID DATA MONITOR function.
3. Using the PID DATA MONITOR function, measure the engine speed.
4. Compare the values of the vehicle tachometer and the **SST** (NGS).

SST indication (rpm)	Tachometer indication (rpm)
1000	880—1060

5. If not as specified, go to Step 2.
6. If correct, check the diagnostic trouble code by using the **SST** (NGS).
   (Refer to the 1996 626/MX-6 Workshop Manual section F1, F2 and F3).

Step 2
Verify that the tachometer operates.

Tachometer	Action
Operates	Replace the tachometer (Refer to pages C1–14 or 15 and 16)
Does not operate	Go to Step 3

Step 3
1. Check the wiring harness.
   (FS MTX, KL: distributor—instrument cluster).
   (FS ATX: ignition coil—instrument cluster).
2. If the wiring harness is correct, replace the tachometer.
   (Refer to pages C1–14, or 15 and 16.)
3. If the wiring harness is incorrect, repair the wiring harness.

INSTRUMENT CLUSTER CONNECTOR

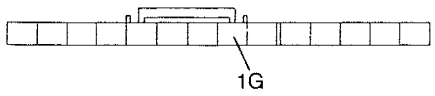

FS MTX, KL: DISTRIBUTOR CONNECTOR

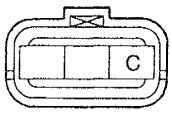

FS, ATX: IGNITION COIL CONNECTOR

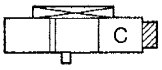

Flowchart No.5	Symptom	Fuel gauge does not operate or is incorrect

Possible cause
- Damaged fuel gauge sender unit
- Damaged fuel gauge
- Open or short circuit in wiring harness
- Poor connection of connector

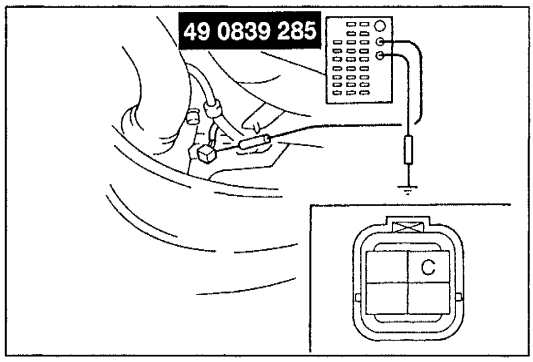

Step 1
1. Disconnect the fuel gauge sender unit connector.
2. Connect the red lead of the **SST** to terminal C (Y) of the connector and the black lead to ground.
3. Turn the ignition switch to ON.

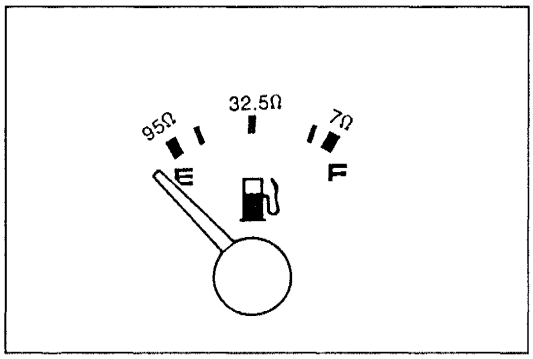

4. Set the **SST** to the resistance values shown in the figure. To get an accurate reading, wait 2 minutes after setting each value.
5. Verify that the fuel gauge indicates the correct values. The allowable indication error is twice the width of the needle.

Gauge display	Action
Correct	Replace fuel gauge sender unit (Refer to the 1996 626/MX-6 Workshop Manual, section F1, F2, and F3)
Incorrect	Go to Step 2

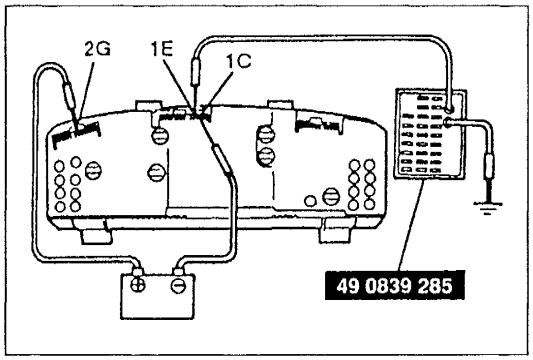

Step 2
1. Remove the instrument cluster. (Refer to page C1–14 or C1–15.)
2. Connect battery positive voltage to terminal 2G and ground to terminal 1C of the instrument cluster.
3. Connect the red lead of the **SST** to terminal 1E of the instrument cluster and the black lead to ground.
4. Set the **SST** to the resistance values shown in the figure. To get an accurate reading, wait 2 minutes after setting each value.
5. Verify that the fuel gauge indicates the correct values. The allowable indication error is twice the width of the needle.

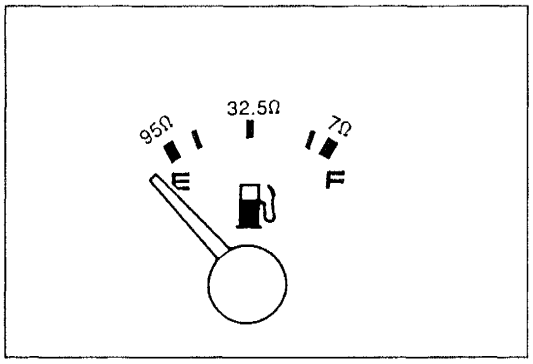

Gauge display	Action
Correct	Repair wiring harness (Instrument cluster—Fuel gauge sender unit)
Incorrect	Replace fuel gauge (Refer to page C1–16)

Flowchart No.6	Symptom	Water temperature gauge does not operate or is incorrect

Possible cause
- Damaged water temperature sender unit
- Damaged instrument cluster
- Open or short circuit in wiring harness
- Poor connection of connector

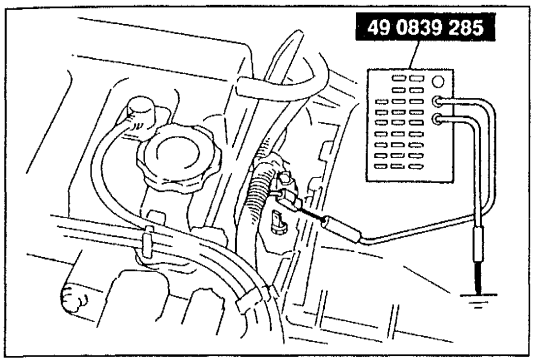

Step 1
1. Disconnect the water temperature sender unit connector.
2. Connect the red lead of the **SST** to the water temperature sender unit connector and the black lead to ground.
3. Turn the ignition switch to ON.

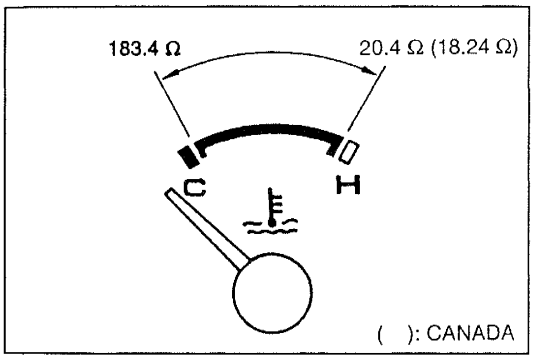

4. Set the **SST** to the resistance values shown in the figure. To get an accurate reading, wait 2 minutes after setting each value.
5. Verify that the water temperature gauge indicates the correct values. The allowable indication error is twice the width of the needle.

Gauge display	Action
Correct	Replace water temperature sender unit (Refer to page C1–19)
Incorrect	Go to Step 2

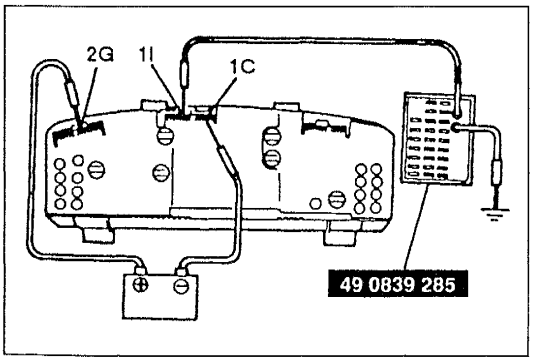

Step 2
1. Remove the instrument cluster. (Refer to page C1–14 or C1–15.)
2. Connect battery positive voltage to terminal 2G and ground to terminal 1C of the instrument cluster.
3. Connect the red lead of the **SST** to terminal 1I of the instrument cluster and the black lead to ground.
4. Set the **SST** to the resistance values shown in the figure. To get an accurate reading, wait 2 minutes after setting each value.
5. Verify that the water temperature gauge indicates the correct values. The allowable indication error is twice the width of the needle.

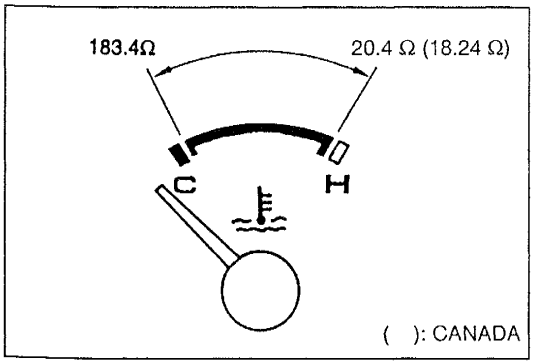

Gauge display	Action
Correct	Repair wiring harness (Instrument cluster—Water temperature sender unit)
Incorrect	Replace water temperature gauge (Refer to page C1–16)

INSTRUMENT CLUSTER

Removal / Installation

1. Remove in the order shown in the figure.
2. Install in the reverse order of removal.

626

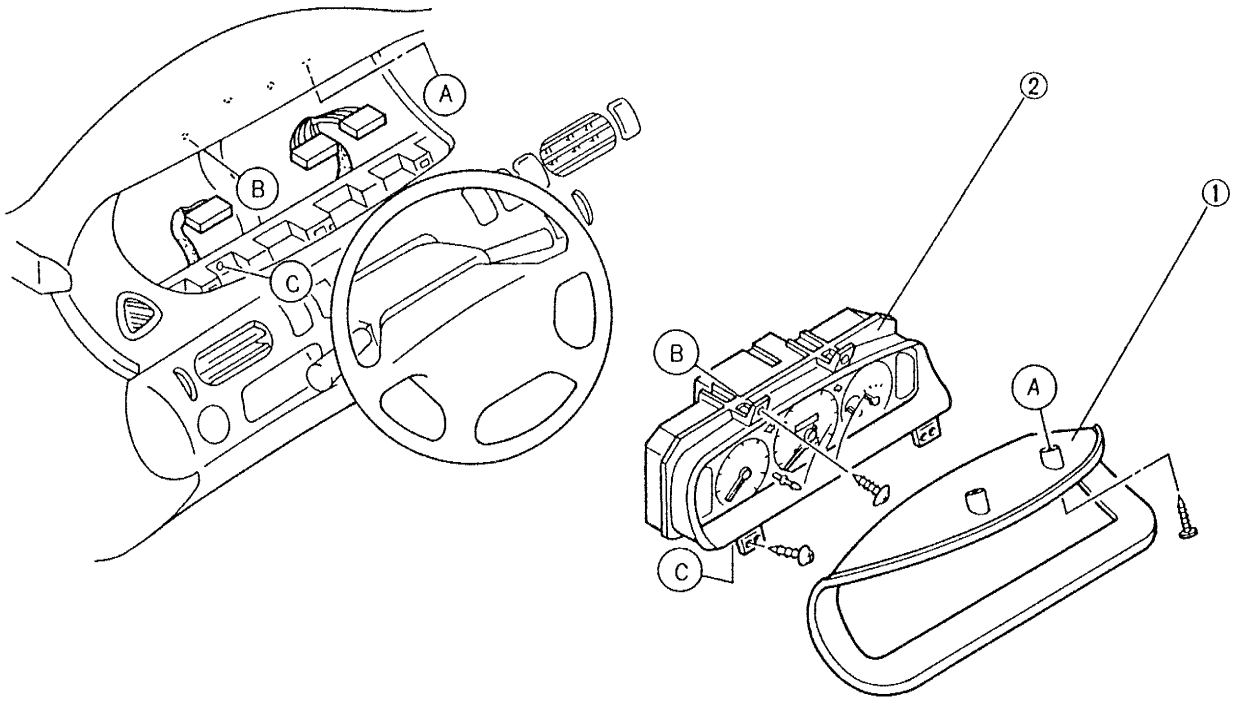

1. Meter hood
2. Instrument cluster
   Disassembly / Assembly .....page C1–16

Warning

- **Handling the air bag module improperly can accidentally deploy the air bag, which may seriously injure you. Read SERVICE WARNINGS, section S, before handling the air bag module.**

MX-6

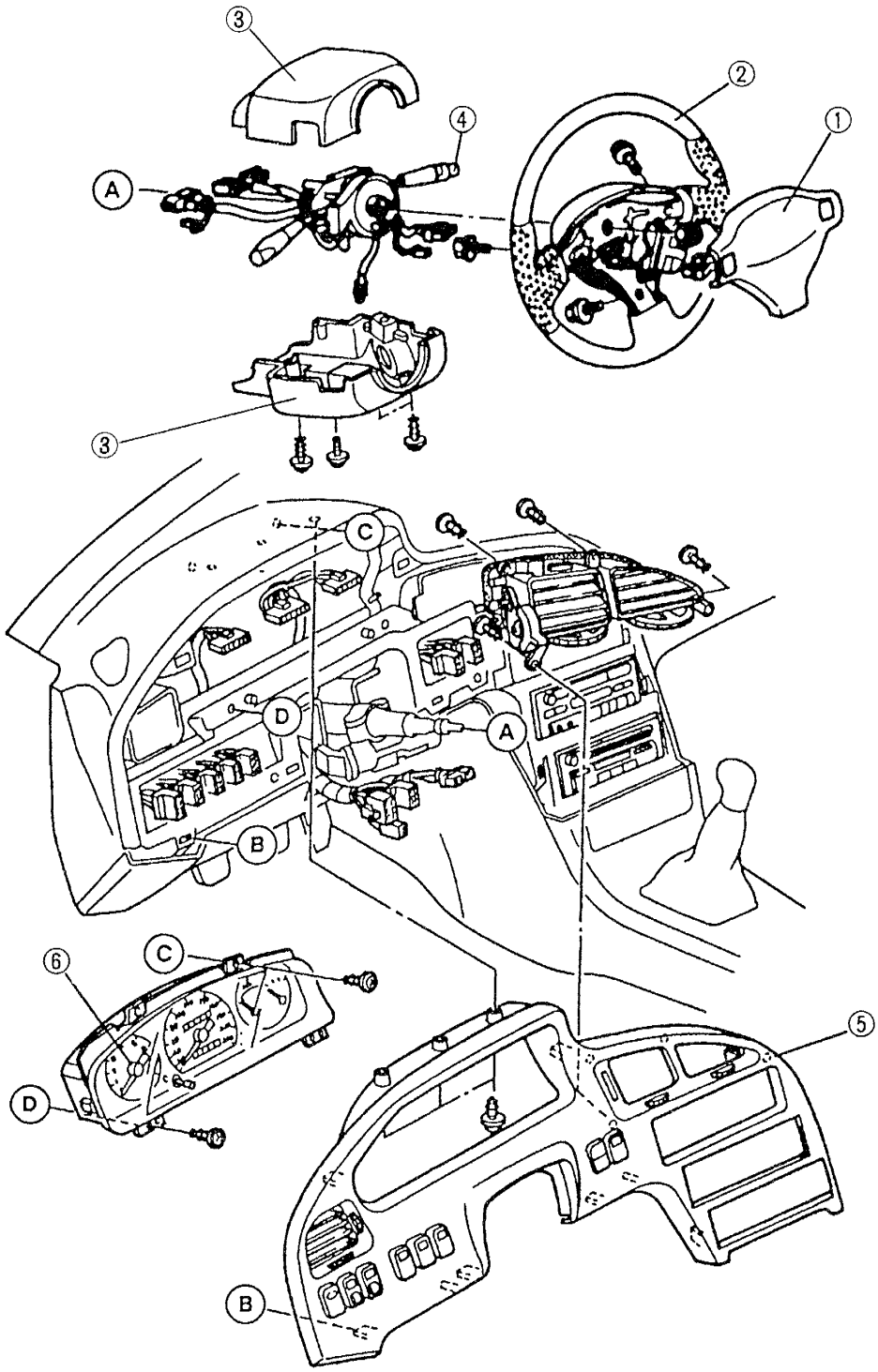

1. Air bag module
2. Steering wheel
3. Column cover
4. Combination switch
5. Switch panel
6. Instrument cluster
   Disassembly / Assembly .....page C1–16

Disassembly / Assembly

1. Disassemble as shown in the figure.
2. Assemble in the reverse order of disassembly.

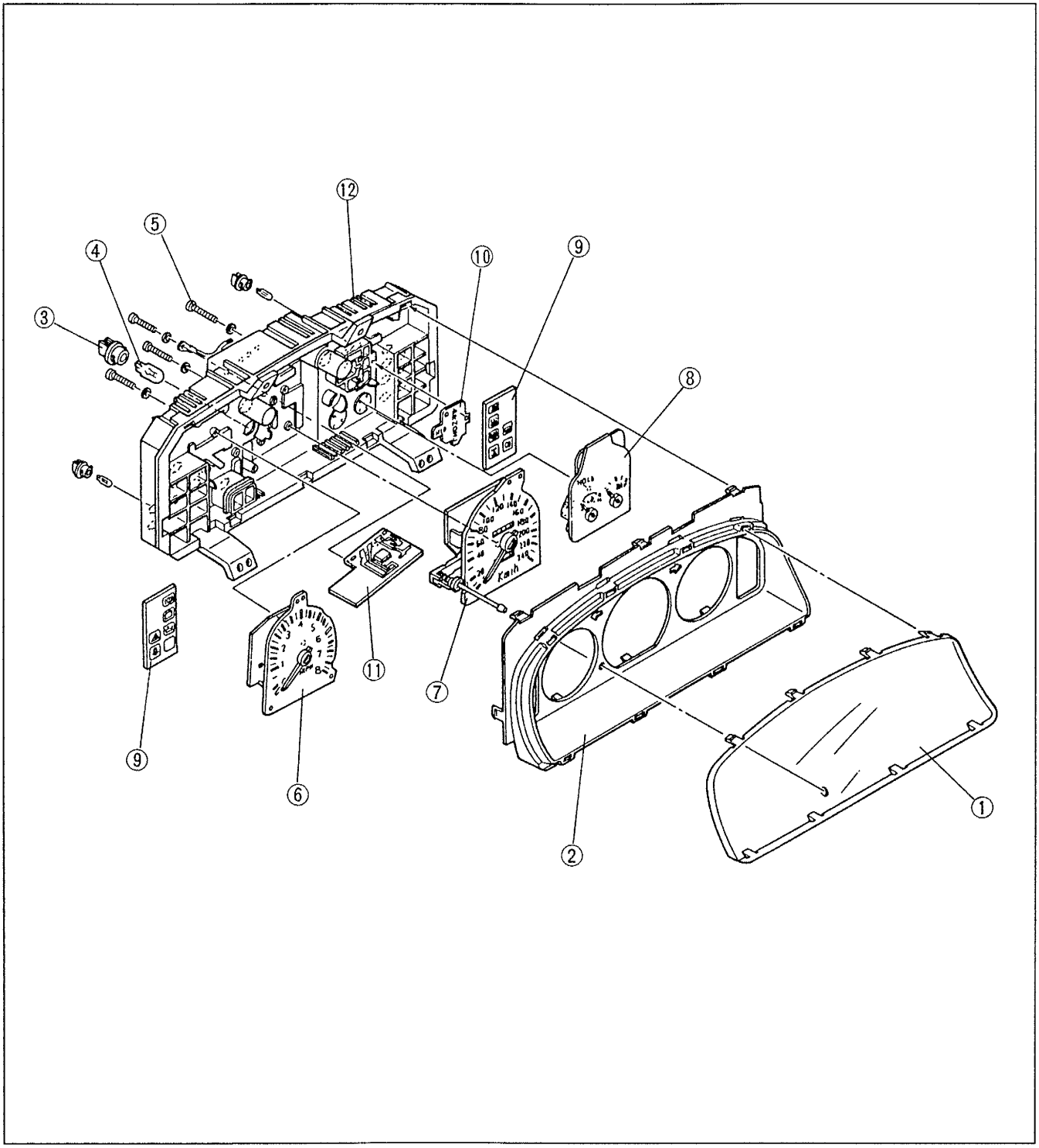

1. Glass front
2. Window plate
3. Socket
4. Bulb
5. Screw
6. Tachometer
7. Speedometer
8. Fuel and water temperature gauges
9. Sheet warning
10. Lens warning
11. Print plate
12. Case

Standard indication (km/h)	Allowable range (km/h)
40	36.0—46.0
90	81.0—103.5

Standard indication {MPH}	Allowable range {MPH}
30	27.0—34.5
80	72.0—92.0

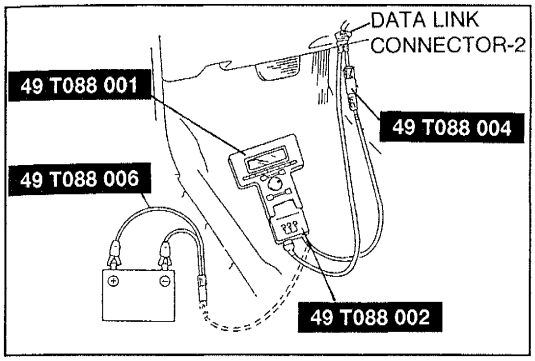

SPEEDOMETER
Inspection

Note
- Tire wear and improper inflation will increase speedometer error.

1. Using a speedometer tester, check the speedometer for indication error, and check the operation of the odometer.
2. Replace the speedometer, if necessary. (Refer to pages C1–14, or 15 and 16.)
3. If the speedometer indication is not as specified or the odometer does not operate properly, replace the speedometer.

Tachometer
Inspection

1. Connect the **SST** (NGS) to the data link connector-2 and battery.
2. Referring to the NGS operational manual, select the PID DATA MONITOR function.
3. Using the PID DATA MONITOR function, measure the engine speed.
4. Compare the values of the vehicle tachometer and the **SST** (NGS).

Standard indication {rpm}	Allowable indication {rpm}
1,000	880—1,060
2,000	1,970—2,150
3,000	3,000—3,180
4,000	4,000—4,240
5,000	5,000—5,300
6,000	6,000—6,360
7,000	7,000—7,420
8,000	8,000—8,480

5. If not as specified, inspect the wiring harness. (FS MTX, KL: distributor—instrument cluster) (FS ATX: ignition coil—instrument cluster)
6. If the wiring harness is normal, replace the tachometer. (Refer to pages C1–14, or 15 and 16.)

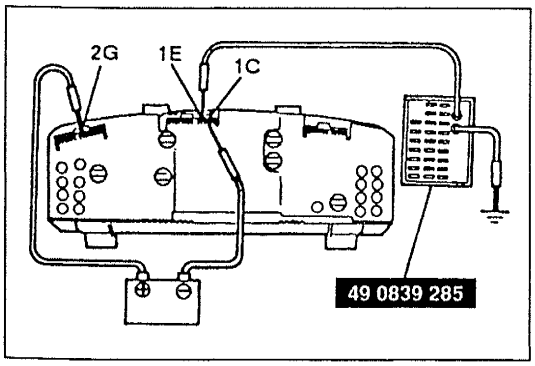

FUEL GAUGE
Inspection

1. Remove the instrument cluster. (Refer to page C1–14 or C1–15.)
2. Connect battery positive voltage to terminal 2G and ground to terminal 1C of the instrument cluster.
3. Connect the red lead of the **SST** to terminal 1E of the instrument cluster and the black lead to ground.

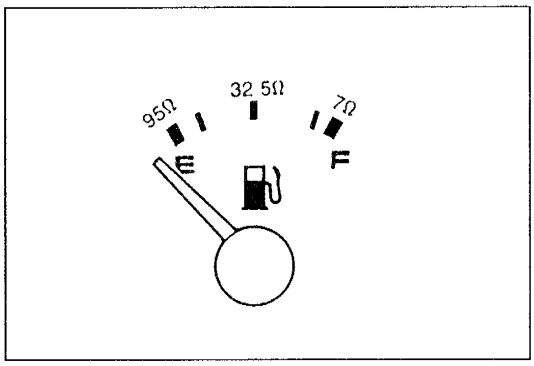

4. Set the **SST** to the resistance values shown in the figure.
5. Verify that the needle indicates the correct range.
6. If not as specified, replace the fuel gauge. (Refer to page C1–16.)

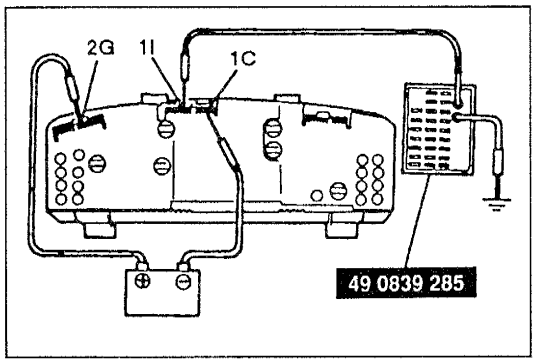

WATER TEMPERATURE GAUGE

Inspection

1. Remove the instrument cluster. (Refer to page C1–14 or C1–15.)
2. Connect battery positive voltage to terminal 2G and ground to terminal 1C of the instrument cluster.
3. Connect the red lead of the **SST** to terminal 1I of the instrument cluster and the black lead to ground.

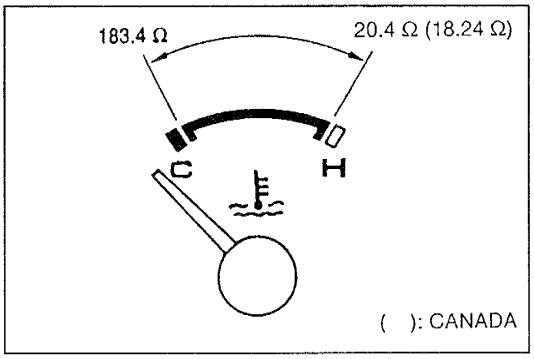

4. Set the **SST** to the resistance values shown in the figure.
5. Verify that the needle indicates the correct range.
6. If not as specified, replace the water temperature gauge. (Refer to page C1–16.)

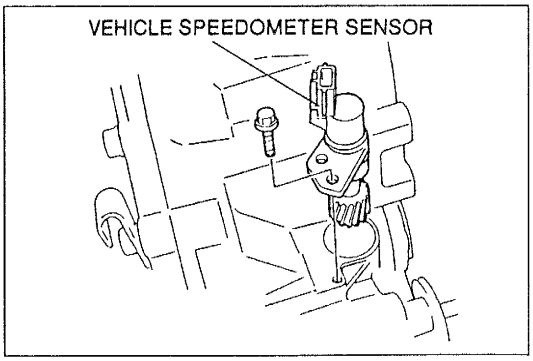

VEHICLE SPEEDOMETER SENSOR

Removal / Installation

1. Disconnect the vehicle speedometer sensor connector.
2. Remove the bolt and vehicle speedometer sensor.
3. Install in the reverse order of removal.

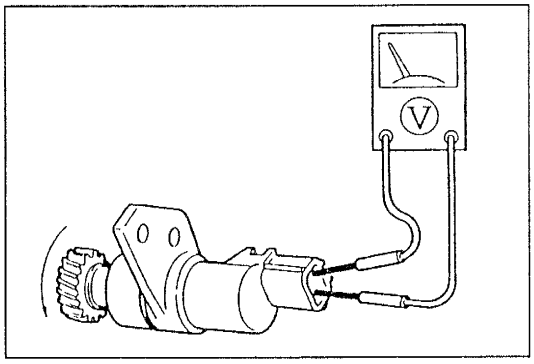

Inspection

1. Remove the vehicle speedometer sensor.
2. Turn the tip of the vehicle speedometer sensor and verify that magnetic resistance is felt.
3. Measure the voltage between the terminals of the vehicle speedometer sensor while rotating the driven gear.

Meter needle	Action
Moves slightly under 5V	Normal
Does not move	Replace vehicle speedometer sensor

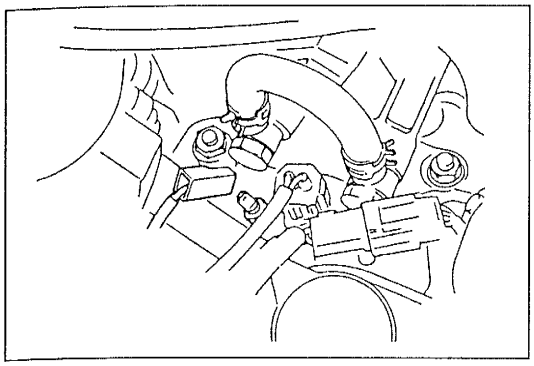

WATER TEMPERATURE SENDER UNIT

Removal / Installation

1. Disconnect the water temperature sender unit connector.
2. Remove the water temperature sender unit.

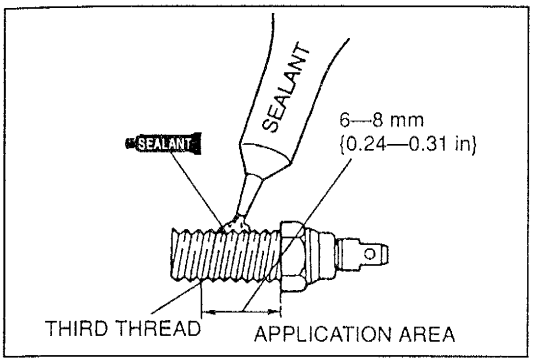

3. Before installing the unit, apply sealant from the third thread to the top thread.
4. Install in the reverse order of removal.

Tightening torque: 11.8—17.6 N·m {120—180 kgf·cm, 105—156 in·lbf}

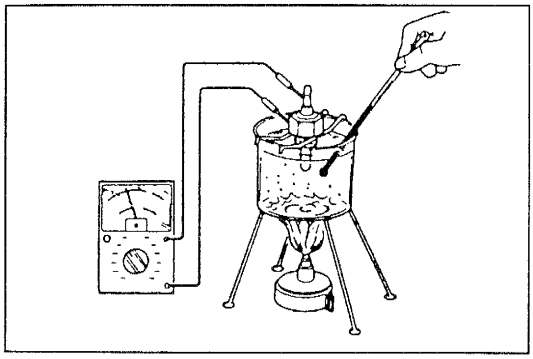

Inspection

1. Remove the water temperature sender unit.
2. Place the sensor in water.
3. Heat the water gradually and measure the resistance of the sensor.

Water temperature	50 °C {122 °F}
Resistance	189.4—259.6 Ω

4. If not as specified, replace the water temperature sender unit.

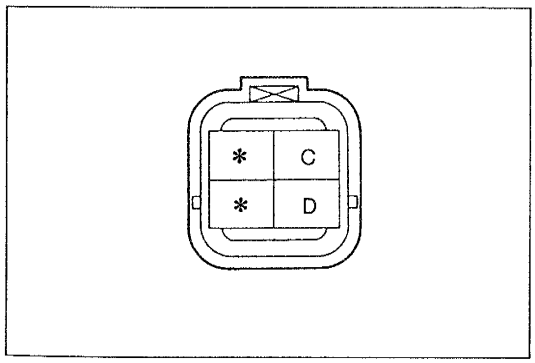

FUEL GAUGE SENDER UNIT

Inspection

1. Remove the fuel gauge sender unit.
   (Refer to the 1996 626/MX-6 Workshop Manual, section F1, F2 and F3.)
2. Measure the resistance between terminals D and C of the fuel gauge sender unit while moving the unit arm from point F to point E.
3. If not as specified, replace the fuel gauge sender unit.

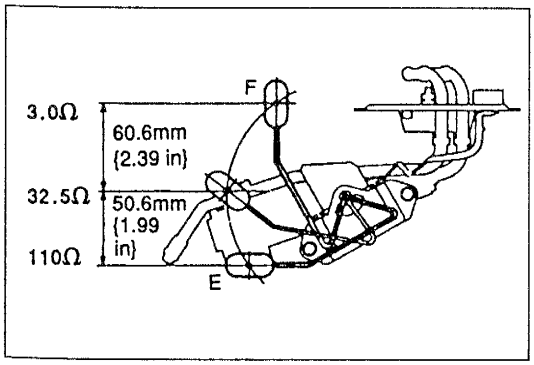

Before beginning any service procedure, refer to section S of this manual for air bag system service warnings.

WARNING SYSTEM

WARNING SYSTEM

STRUCTURAL VIEW

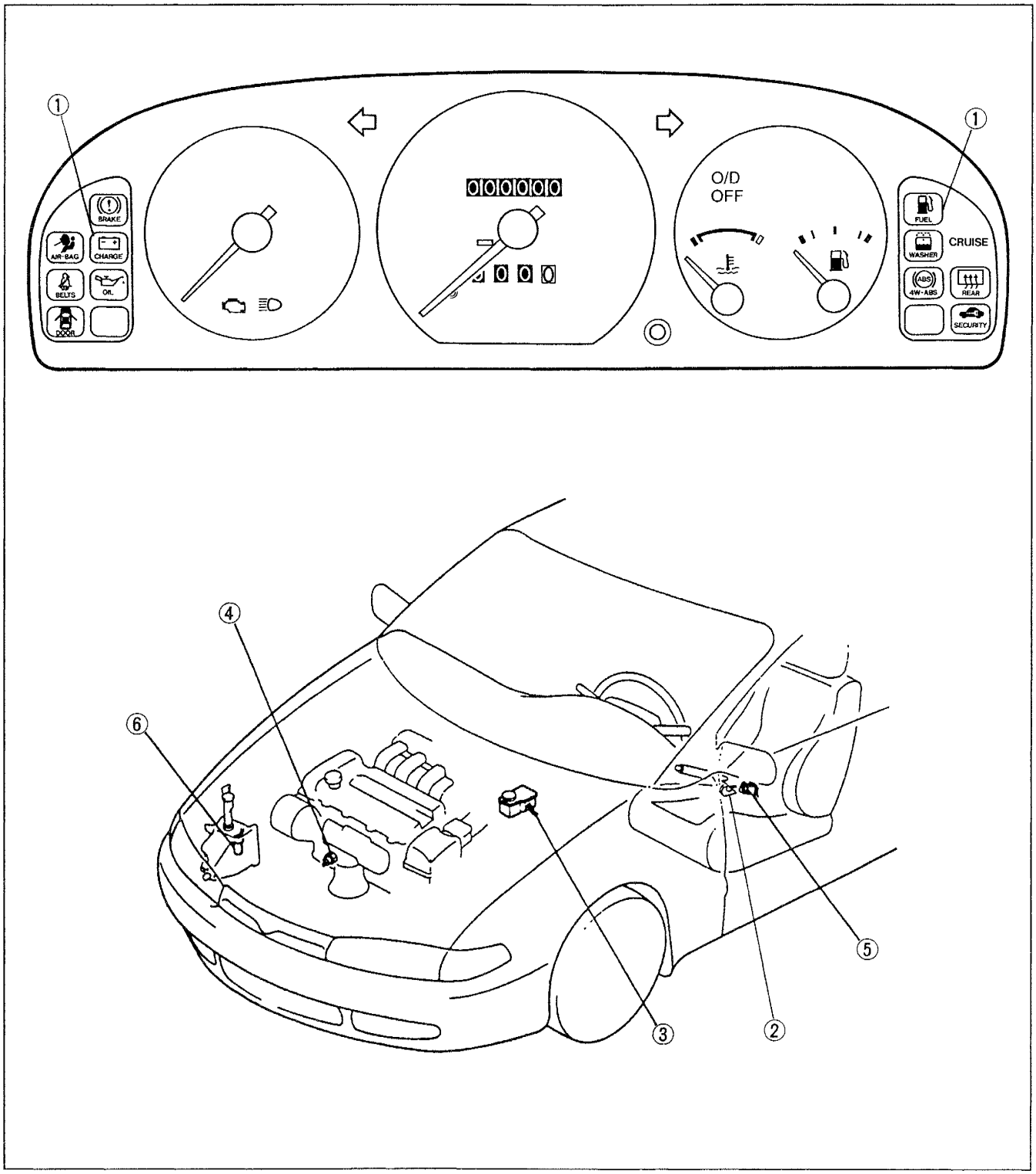

1. Warning and indicator lights (in instrument cluster)
   Replacement (Bulb)..... page C2–32
2. Parking brake switch
   Inspection..... page C2–32
3. Brake fluid level sensor
   Inspection..... page C2–33
4. Oil pressure switch
   Inspection..... page C2–33
5. Buckle switch
   Inspection.....page C2–32
6. Washer fluid-level sensor (Canada)
   Inspection.....page C2–33

WARNING AND INDICATOR LIGHTS
Structural View

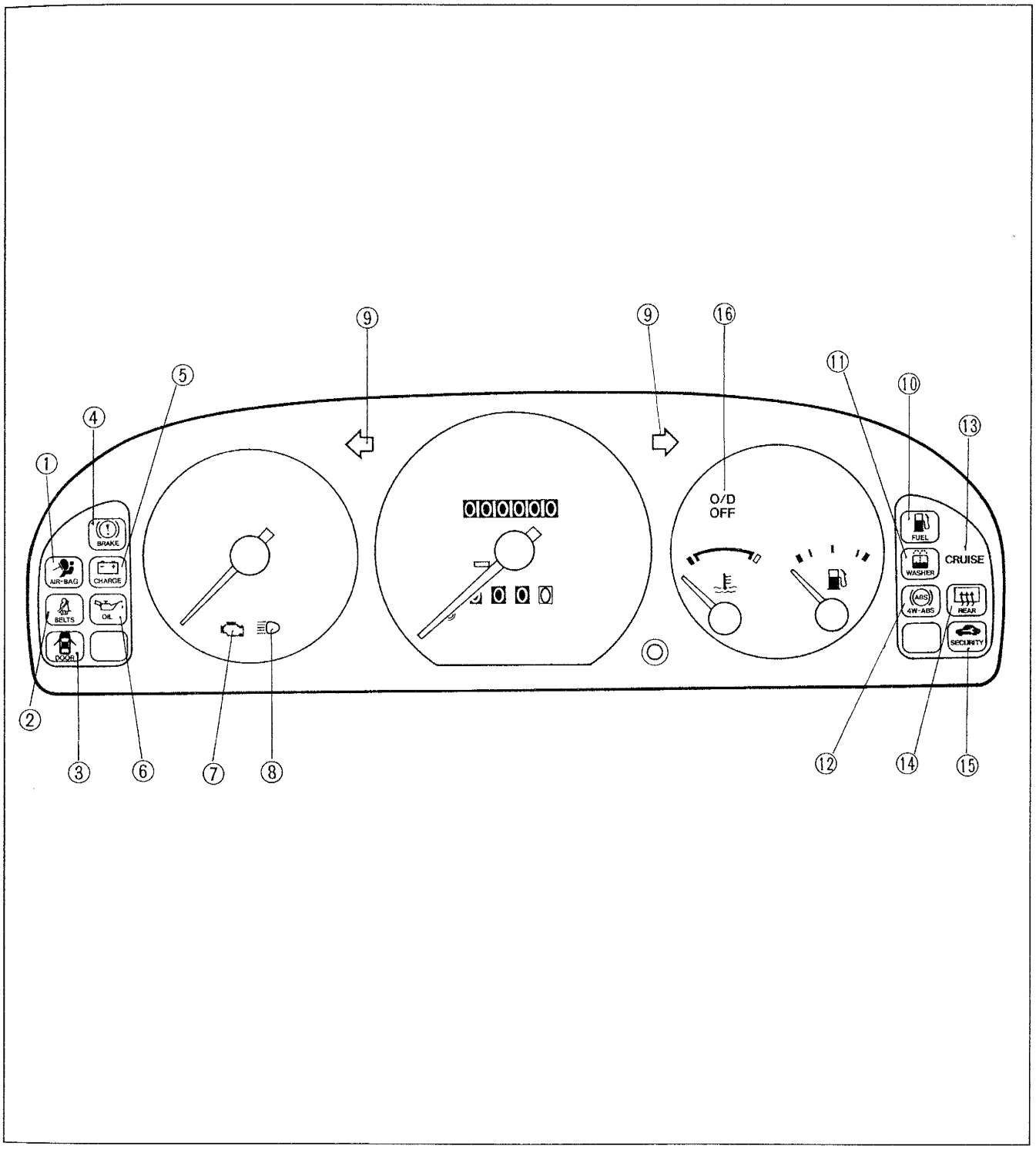

1. Air bag system warning light (1.4 W)
2. Seat belt warning light (1.4 W)
3. Door ajar warning light (1.4 W)
4. Brake system warning light (1.4 W)
5. Generator warning light (2 W)
6. Oil pressure warning light (1.4 W)
7. MIL (malfunction indicator lamp) (1.4 W)
8. High beam indicator light (1.4 W)
9. Turn indicator light (3.4 W × 2)
10. Fuel-level warning light (3.4 W)
11. Washer fluid-level warning light (1.4 W) (Canada)
12. ABS warning light (1.4 W)
13. Cruise set indicator light (1.4 W)
14. Rear window defroster indicator light (1.4 W)
15. Security light (1.4 W)
16. O/D OFF indicator light (1.4 W)

SYSTEM DIAGRAM

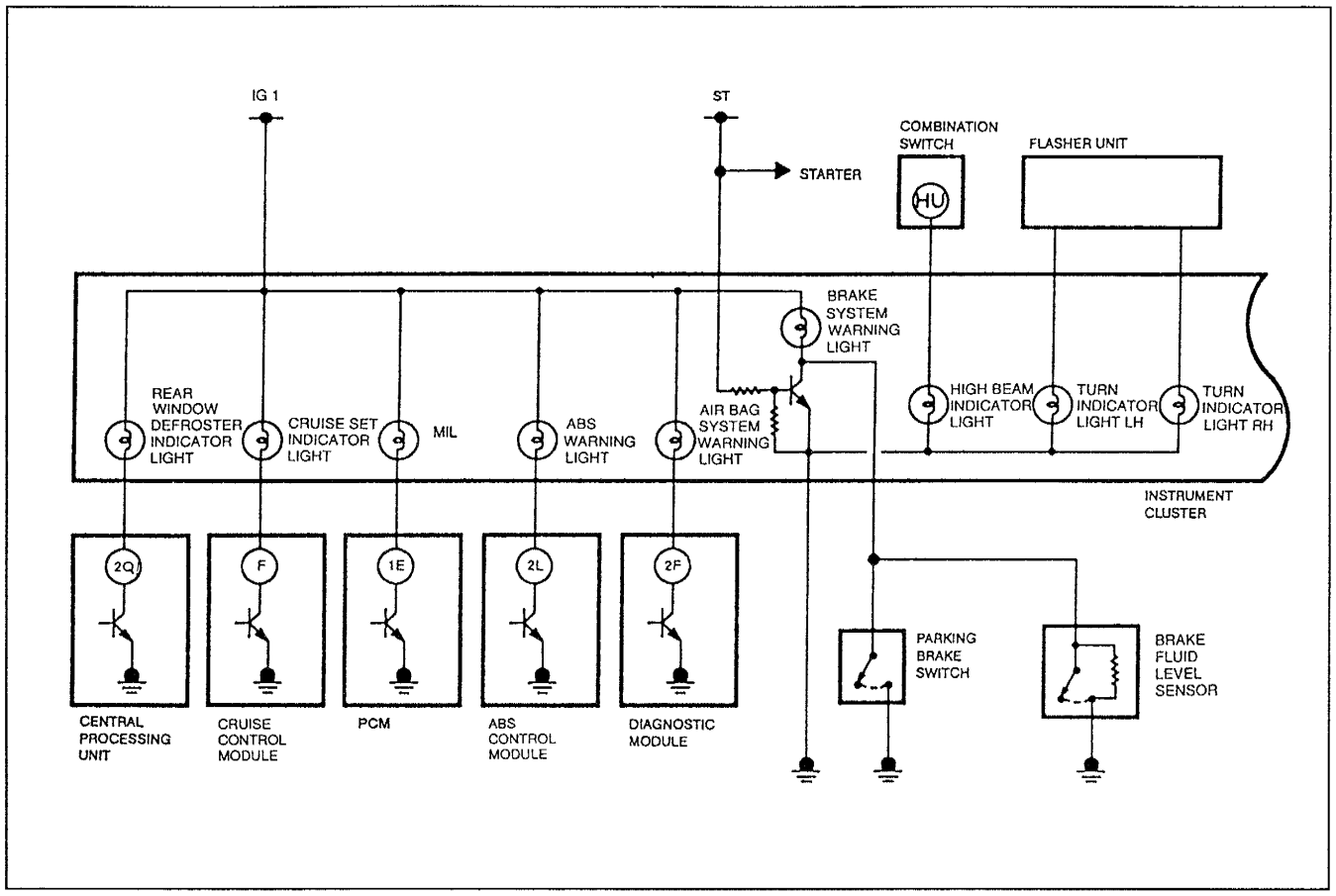

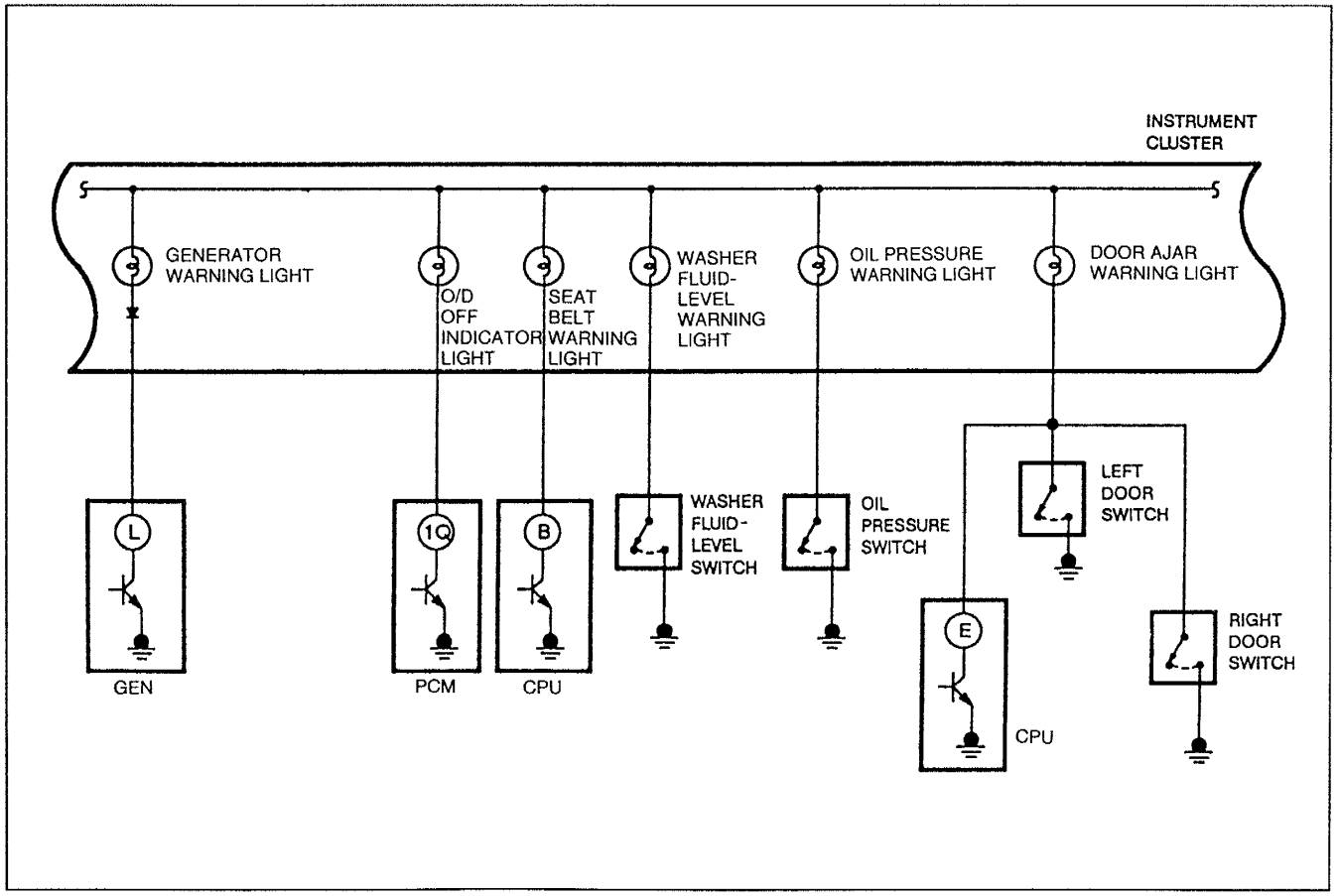

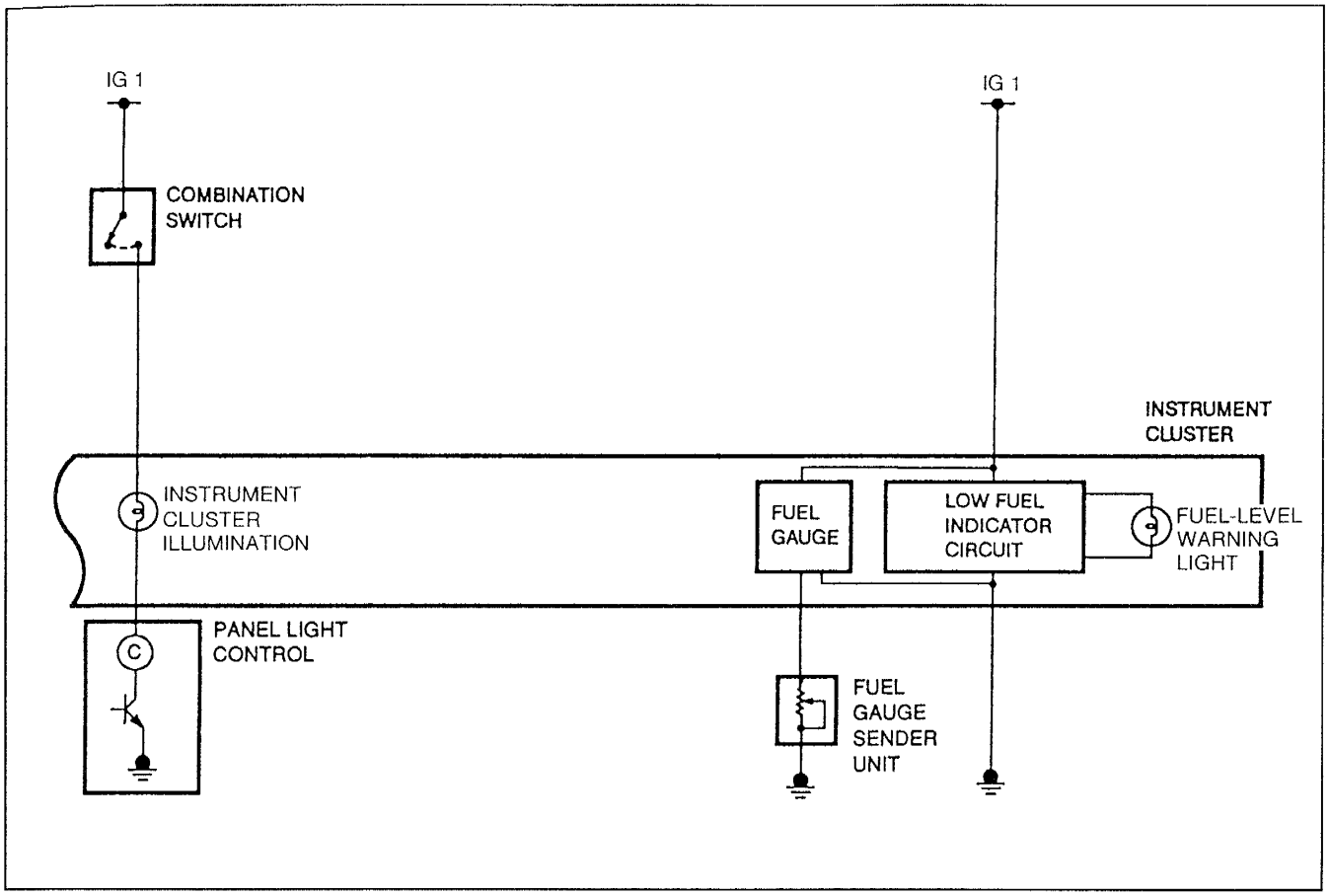
IG 1
IG 1
COMBINATION SWITCH
INSTRUMENT CLUSTER
INSTRUMENT CLUSTER ILLUMINATION
FUEL GAUGE
LOW FUEL INDICATOR CIRCUIT
FUEL-LEVEL WARNING LIGHT
PANEL LIGHT CONTROL
C
FUEL GAUGE SENDER UNIT

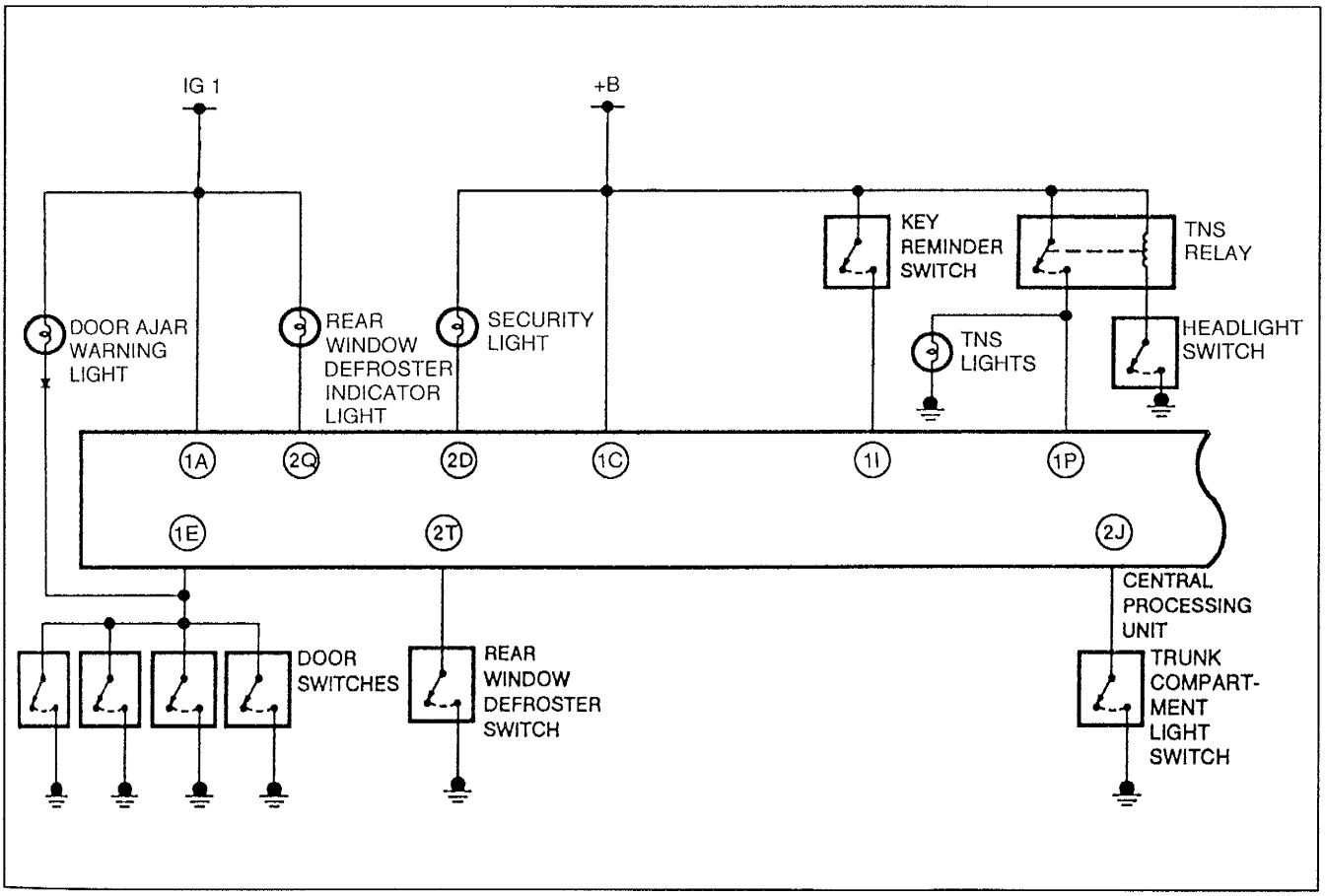
IG 1
+B
KEY REMINDER SWITCH
TNS RELAY
DOOR AJAR WARNING LIGHT
REAR WINDOW DEFROSTER INDICATOR LIGHT
SECURITY LIGHT
TNS LIGHTS
HEADLIGHT SWITCH
1A
2Q
2D
1C
1I
1P
1E
2T
2J
CENTRAL PROCESSING UNIT
DOOR SWITCHES
REAR WINDOW DEFROSTER SWITCH
TRUNK COMPART-MENT LIGHT SWITCH

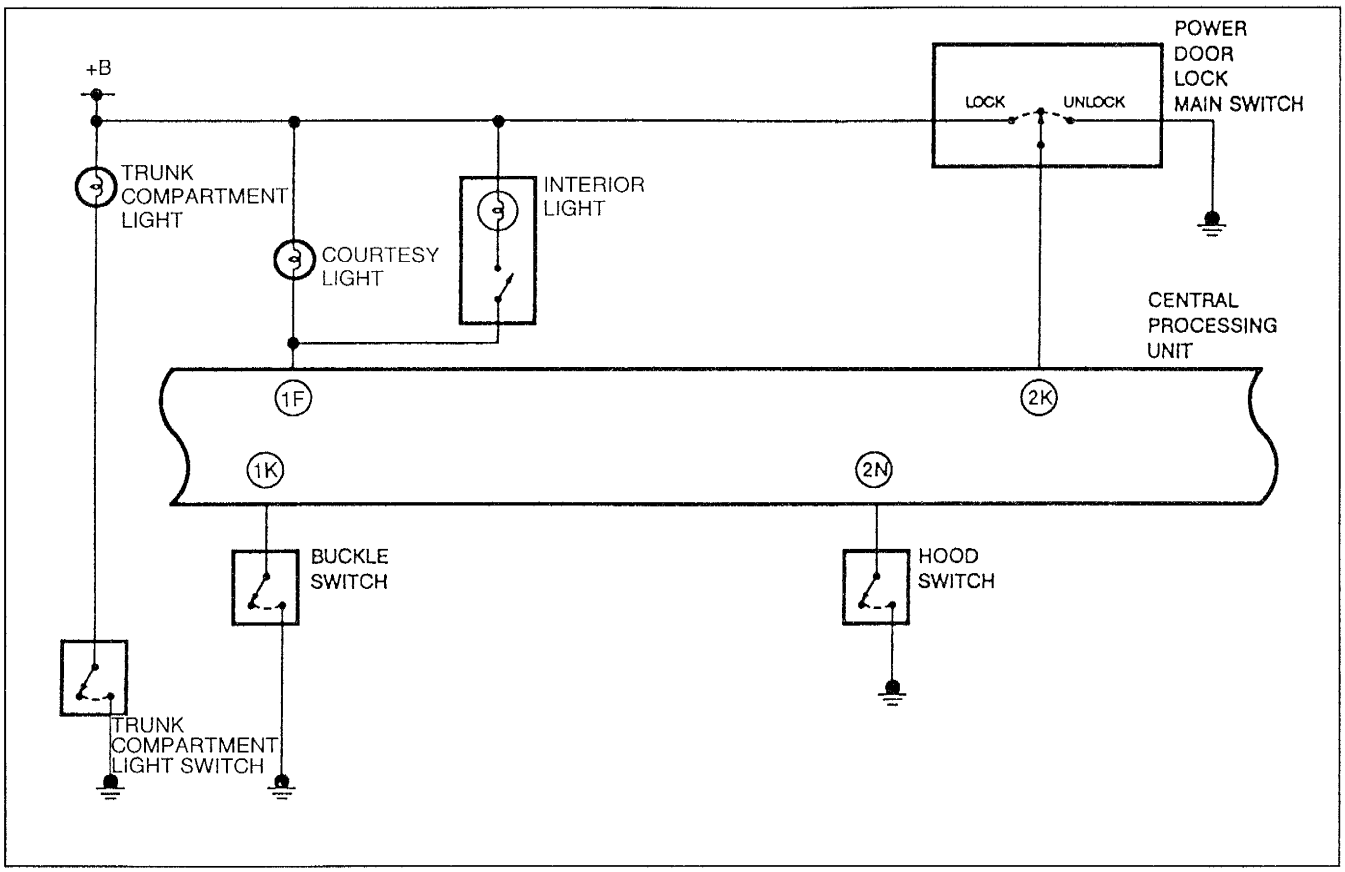
+B
POWER DOOR LOCK MAIN SWITCH
LOCK
UNLOCK
TRUNK COMPARTMENT LIGHT
INTERIOR LIGHT
COURTESY LIGHT
CENTRAL PROCESSING UNIT
1F
2K
1K
2N
BUCKLE SWITCH
HOOD SWITCH
TRUNK COMPARTMENT LIGHT SWITCH

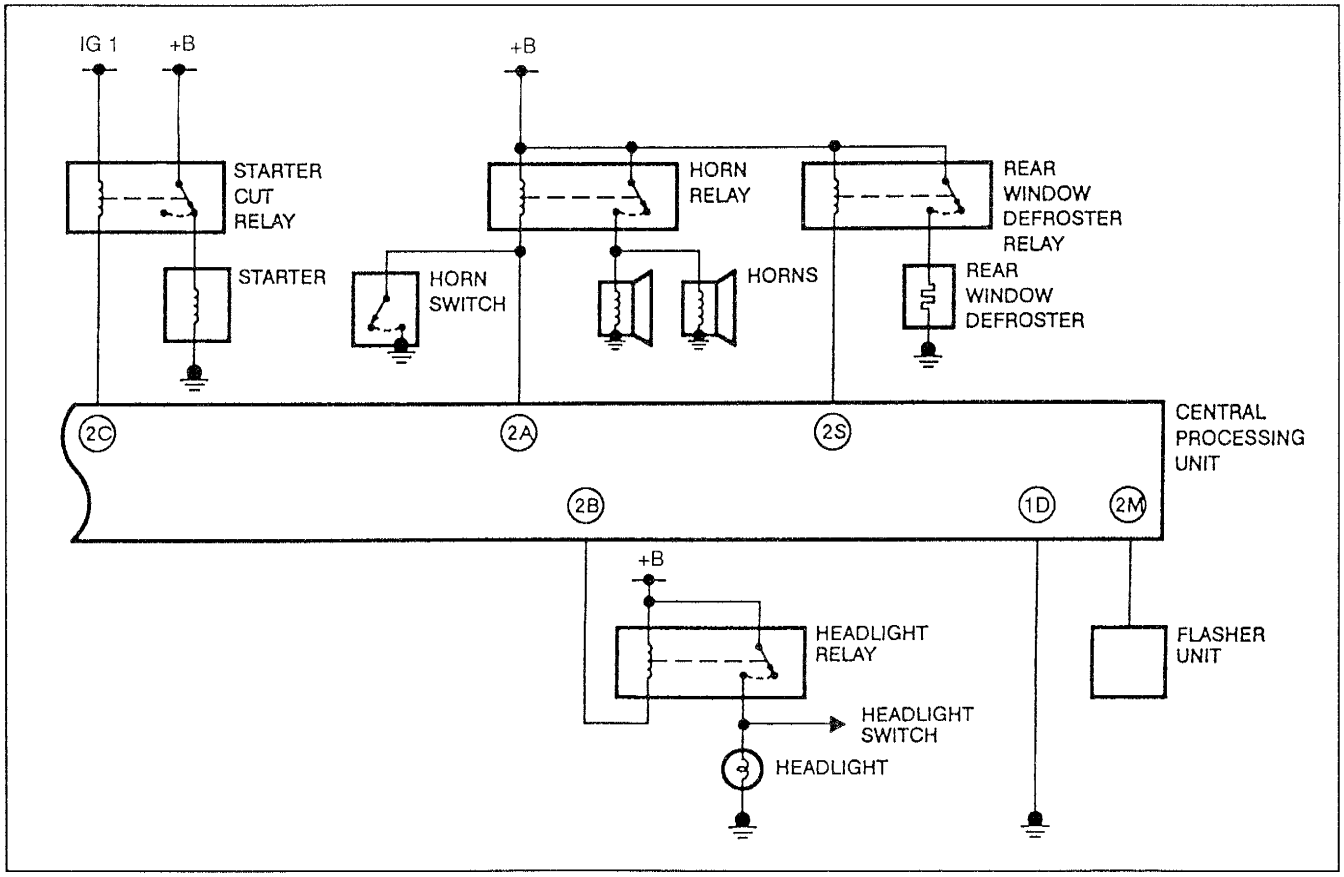
IG 1
+B
+B
STARTER CUT RELAY
STARTER
HORN RELAY
HORN SWITCH
HORNS
REAR WINDOW DEFROSTER RELAY
REAR WINDOW DEFROSTER
CENTRAL PROCESSING UNIT
2C
2A
2S
2B
1D
2M
+B
HEADLIGHT RELAY
HEADLIGHT SWITCH
HEADLIGHT
FLASHER UNIT

Description

The warning lights and indicators are located in the instrument cluster and are controlled by their respective switches and/or control modules. Most, but not all, of these warning lights and indicators are grounded directly by their respective switch or control module.

System Operation

Cruise set indicator light

The cruise set indicator illuminates when the cruise control module applies ground to the cruise set indicator light, alerting the driver that the cruise control is engaged.

ABS warning light

The ABS warning light illuminates when there may be a problem with the antilock brake system. This warning light is controlled by the ABS control module.

Brake system warning light

The brake system warning light illuminates when the ignition switch is at START, the parking brake is set, or the brake fluid level is low. When the ignition switch is at START, battery positive voltage is applied to a transistor in the instrument cluster. This transistor is turned on by applying ground to the brake system warning light, forcing the warning light to illuminate. When the parking brake is set, the parking brake switch applies ground directly to the brake system warning light. When the brake fluid level is low, the brake fluid level sensor closes and applies ground directly to the brake system warning light, causing the brake system warning light to illuminate.

Generator warning light

The generator warning light illuminates to warn the driver that the generator is not producing electricity. If the generator stops producing sufficient power, it grounds the generator warning light bulb via a diode.

Seat belt warning light and alarm

The seat belt warning light illuminates after the ignition switch is turned to ON with the driver's seat belt unbuckled. The seat belt warning alarm sounds for 4 to 8 seconds after the ignition switch is turned to ON with the driver's seat belt unbuckled. The seat belt warning alarm is controlled by the CPU.

Washer Fluid-level Warning Light (Canada)

The washer fluid-level warning light illuminates to warn the driver that the washer fluid level is low. When the washer fluid level drops below a certain level, the float switch closes, applying ground to the washer fluid-level warning light.

Oil pressure warning light

The oil pressure warning light illuminates to alert the driver of a low oil pressure condition. When the oil pressure drops below a certain level, the oil pressure switch closes, applying ground to the oil pressure warning light.

Door ajar warning light

The door ajar warning light illuminates to alert the driver that one or more of the vehicle doors is open. When a door is opened, its door switch closes, grounding the door ajar warning light.

Fuel-level warning light

The fuel-level warning light illuminates to alert the driver of a low fuel condition. As the fuel level drops, the resistance of the fuel sender decreases. The sender is tied to the fuel-level warning light and the fuel gauge within the instrument cluster. When the sender resistance drops below a certain resistance, the fuel-level warning light applies power to the fuel-level warning light.

Ignition key reminder alarm

The ignition key reminder alarm sounds to alert the driver that the ignition key is in the ignition key cylinder when one of the doors is opened. When the ignition switch is at LOCK or ACC, battery positive voltage is applied to the CPU via the key in the ignition switch. When one of the doors is opened, ground is applied to the CPU via the door switch. When the CPU receives these signals, it sounds the ignition key reminder alarm.

Lights-on reminder alarm

The lights-on reminder alarm sounds to alert the driver that the vehicle lights are on when one of the doors is opened. When the ignition switch is at LOCK or ACC, battery positive voltage is removed from the CPU ignition input. When the light switch is left in the headlight position, battery positive voltage is applied to the CPU via the light switch. When the CPU receives these signals, it sounds the lights-on reminder alarm.

TROUBLESHOOTING
Circuit Diagram

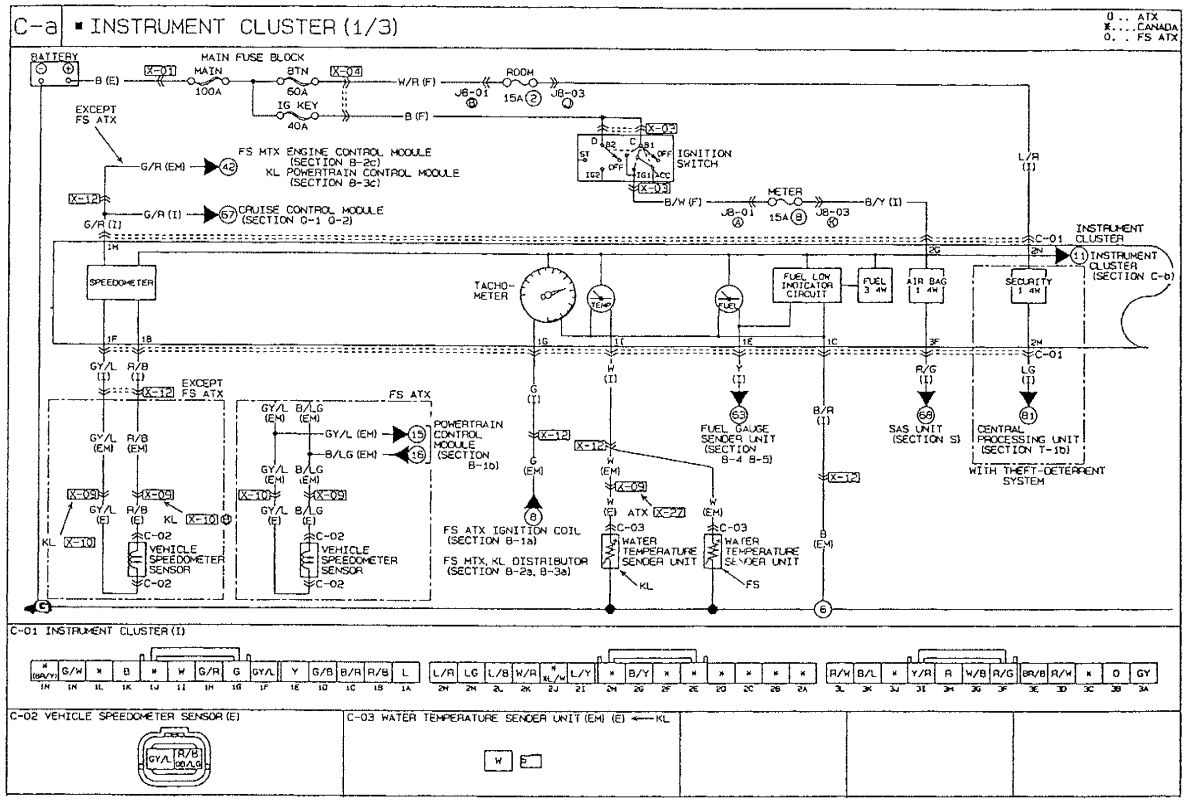

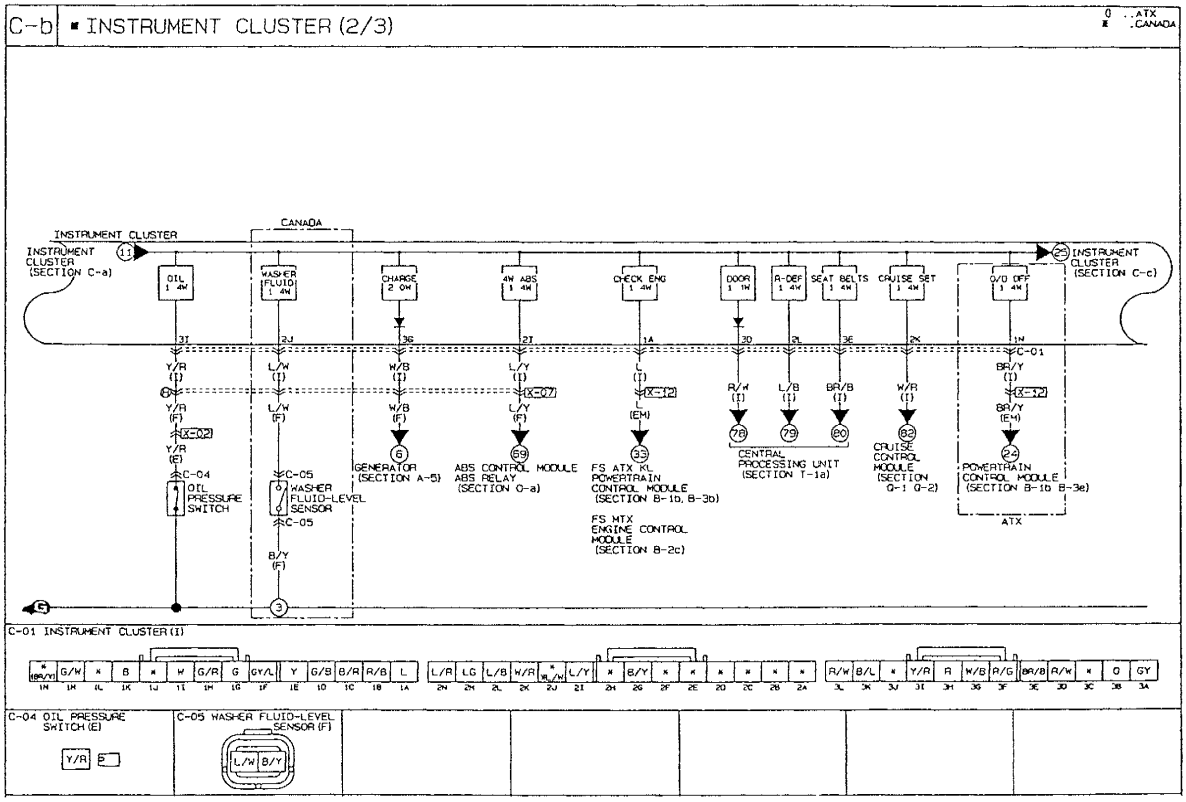

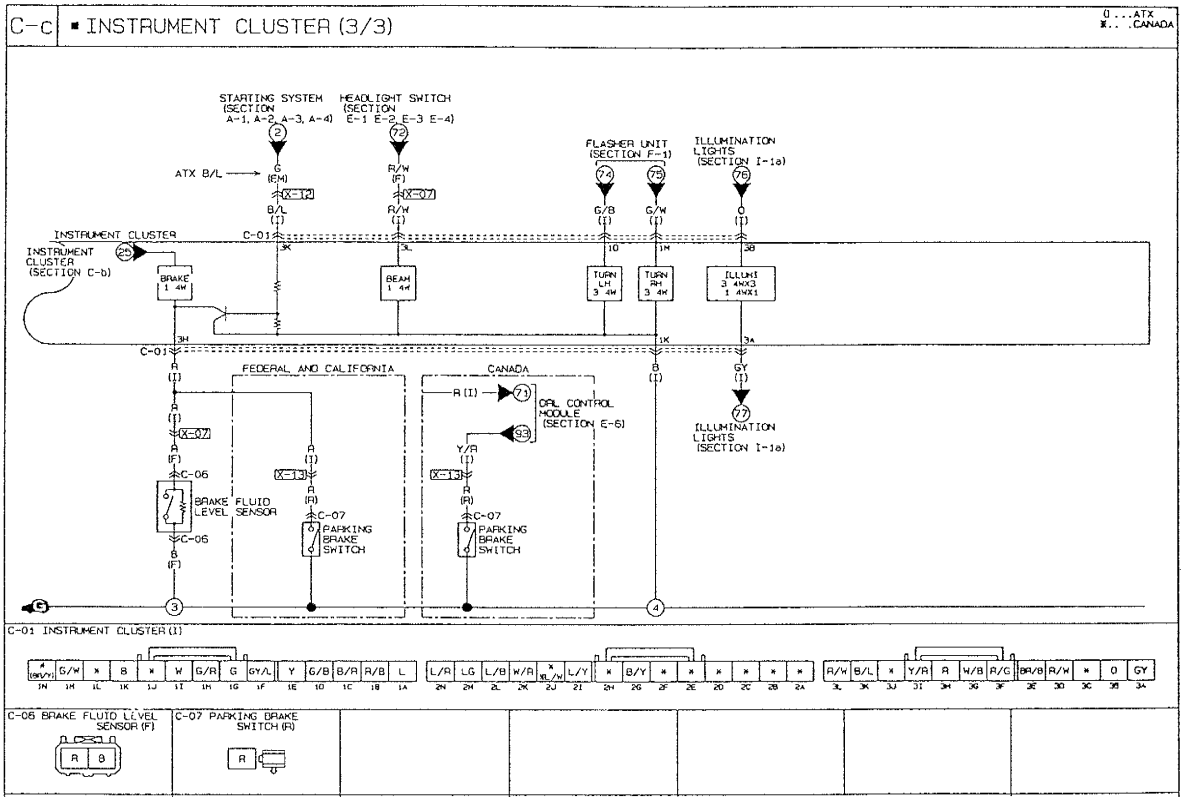
C-c
■ INSTRUMENT CLUSTER (3/3)
0 ...ATX
* ...CANADA
STARTING SYSTEM (SECTION A-1, A-2, A-3, A-4)
HEADLIGHT SWITCH (SECTION E-1 E-2, E-3 E-4)
FLASHER UNIT (SECTION F-1)
ILLUMINATION LIGHTS (SECTION I-1a)
ATX B/L
INSTRUMENT CLUSTER
INSTRUMENT CLUSTER (SECTION C-b)
BRAKE 1 4W
BEAM 1 4W
TURN LH 3 4W
TURN RH 3 4W
ILLUMI 3 4WX3 1 4WX1
FEDERAL AND CALIFORNIA
CANADA
OIL CONTROL MODULE (SECTION E-6)
ILLUMINATION LIGHTS (SECTION I-1a)
BRAKE FLUID LEVEL SENSOR
PARKING BRAKE SWITCH
C-01 INSTRUMENT CLUSTER (1)
C-06 BRAKE FLUID LEVEL SENSOR (F)
C-07 PARKING BRAKE SWITCH (R)

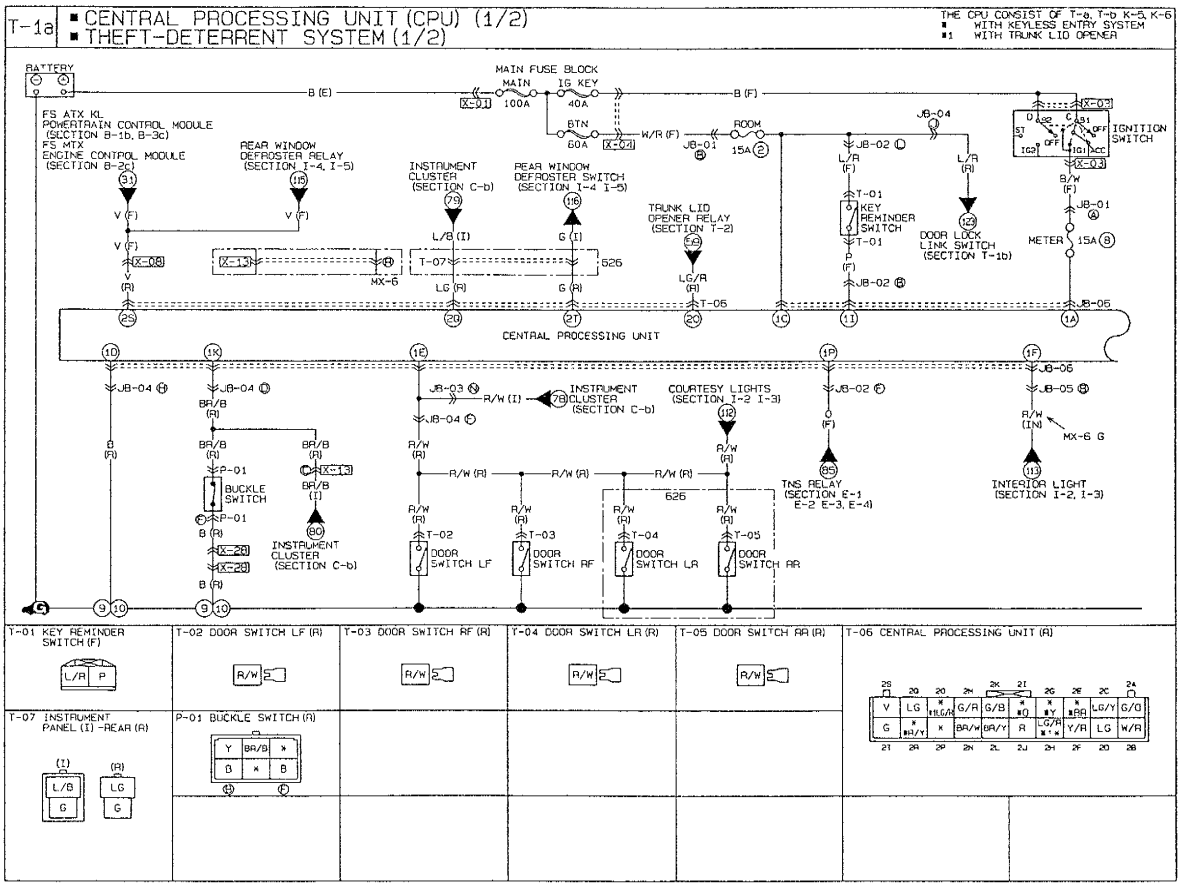
T-1a
■ CENTRAL PROCESSING UNIT (CPU) (1/2)
■ THEFT-DETERRENT SYSTEM (1/2)
THE CPU CONSIST OF T-a, T-b K-5, K-6
■ WITH KEYLESS ENTRY SYSTEM
■1 WITH TRUNK LID OPENER
BATTERY
MAIN FUSE BLOCK
MAIN 100A
IG KEY 40A
BTN 60A
ROOM 15A
FS ATX KL POWERTRAIN CONTROL MODULE (SECTION B-1b, B-3c)
FS MTX ENGINE CONTROL MODULE (SECTION B-2c)
REAR WINDOW DEFROSTER RELAY (SECTION I-4, I-5)
INSTRUMENT CLUSTER (SECTION C-b)
REAR WINDOW DEFROSTER SWITCH (SECTION I-4 I-5)
TRUNK LID OPENER RELAY (SECTION T-2)
KEY REMINDER SWITCH
DOOR LOCK LINK SWITCH (SECTION T-1b)
IGNITION SWITCH
METER 15A
CENTRAL PROCESSING UNIT
BUCKLE SWITCH
INSTRUMENT CLUSTER (SECTION C-b)
COURTESY LIGHTS (SECTION I-2 I-3)
TNS RELAY (SECTION E-1 E-2 E-3, E-4)
INTERIOR LIGHT (SECTION I-2, I-3)
DOOR SWITCH LF
DOOR SWITCH RF
DOOR SWITCH LR
DOOR SWITCH RR
T-01 KEY REMINDER SWITCH (F)
T-02 DOOR SWITCH LF (R)
T-03 DOOR SWITCH RF (R)
T-04 DOOR SWITCH LR (R)
T-05 DOOR SWITCH RR (R)
T-06 CENTRAL PROCESSING UNIT (R)
T-07 INSTRUMENT PANEL (I) -REAR (R)
P-01 BUCKLE SWITCH (R)

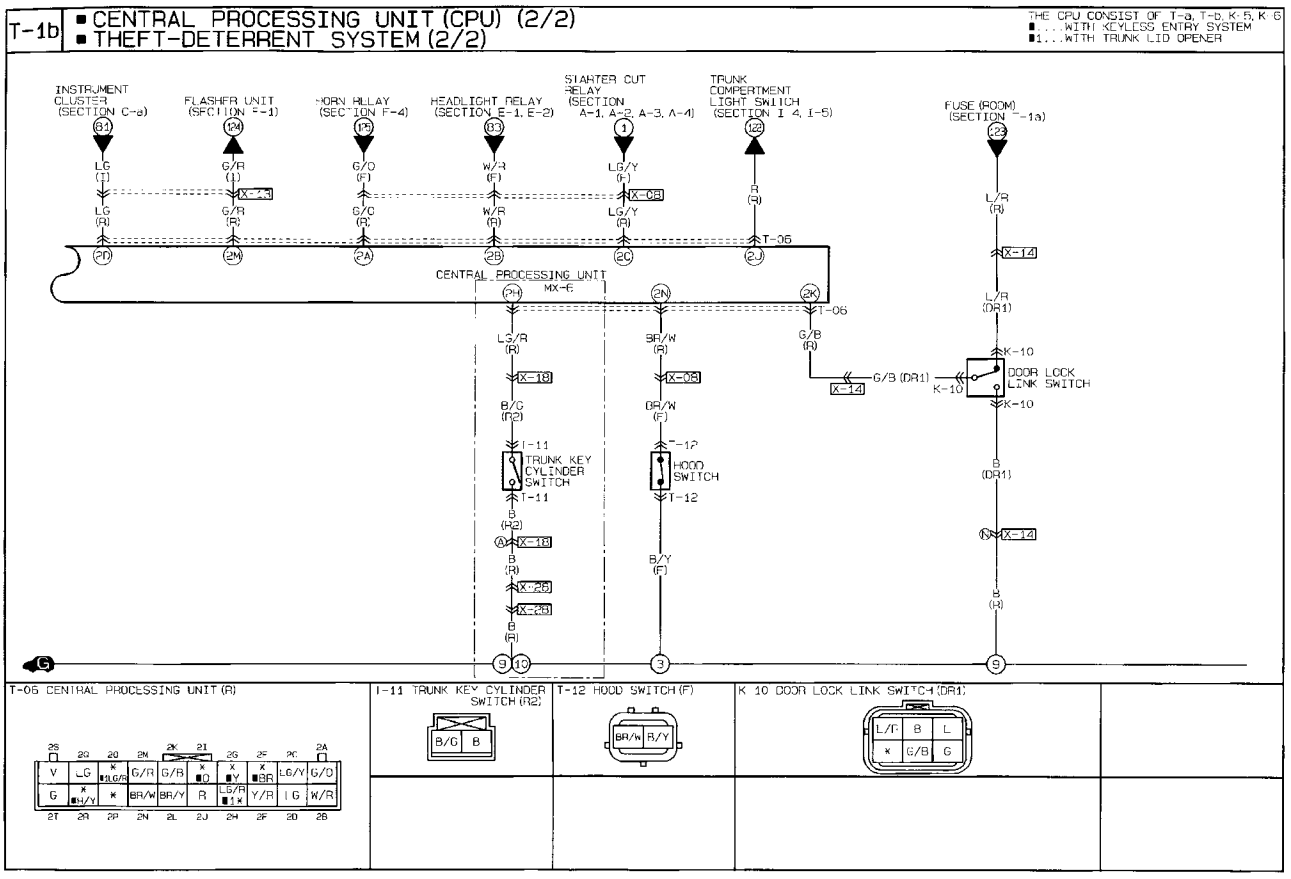
T-1b
■ CENTRAL PROCESSING UNIT (CPU) (2/2)
■ THEFT-DETERRENT SYSTEM (2/2)
THE CPU CONSIST OF T-a, T-b, K-5, K-6
■...WITH KEYLESS ENTRY SYSTEM
■1...WITH TRUNK LID OPENER
INSTRUMENT CLUSTER (SECTION C-a)
FLASHER UNIT (SECTION F-1)
HORN RELAY (SECTION F-4)
HEADLIGHT RELAY (SECTION E-1, E-2)
STARTER CUT RELAY (SECTION A-1, A-2, A-3, A-4)
TRUNK COMPARTMENT LIGHT SWITCH (SECTION I-4, I-5)
FUSE (ROOM) (SECTION F-1a)
CENTRAL PROCESSING UNIT MX-6
TRUNK KEY CYLINDER SWITCH
HOOD SWITCH
DOOR LOCK LINK SWITCH
T-06 CENTRAL PROCESSING UNIT (R)
I-11 TRUNK KEY CYLINDER SWITCH (R2)
T-12 HOOD SWITCH (F)
K-10 DOOR LOCK LINK SWITCH (DR1)

Connector Locations

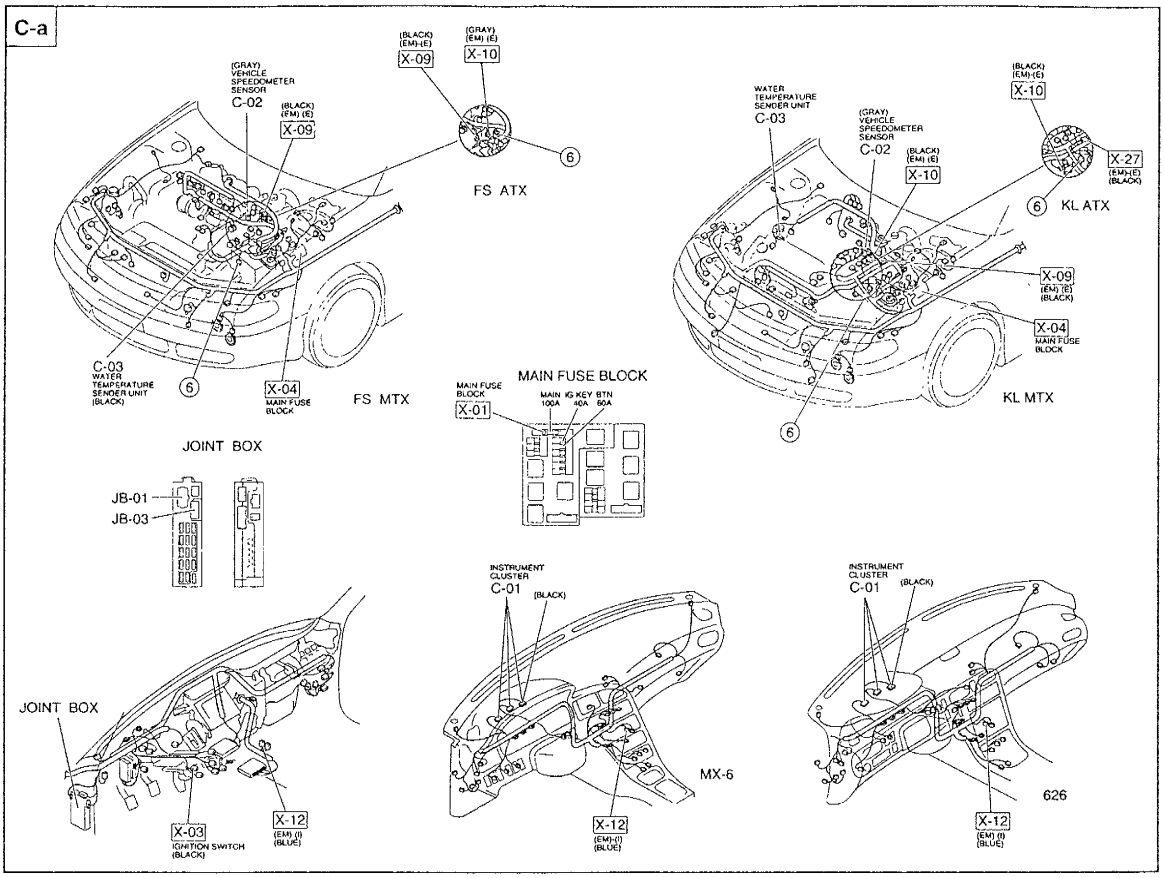

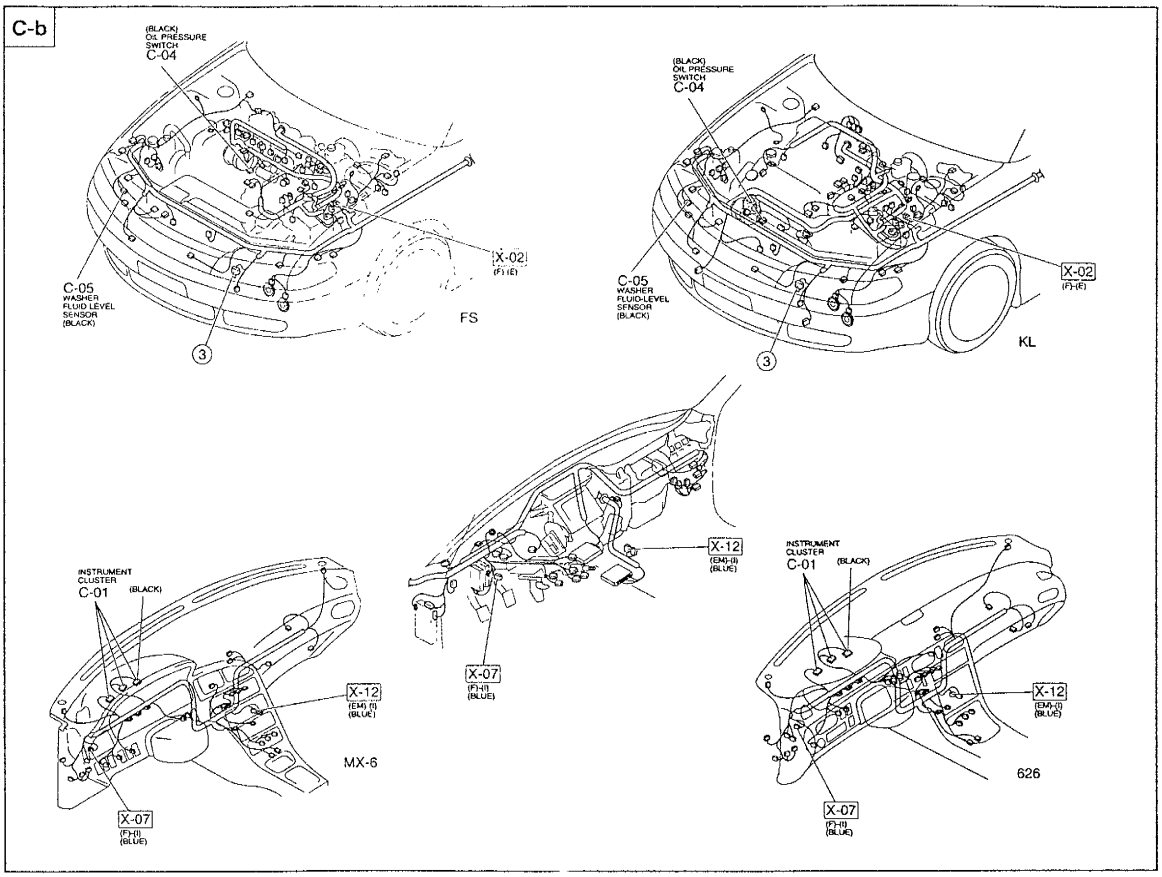

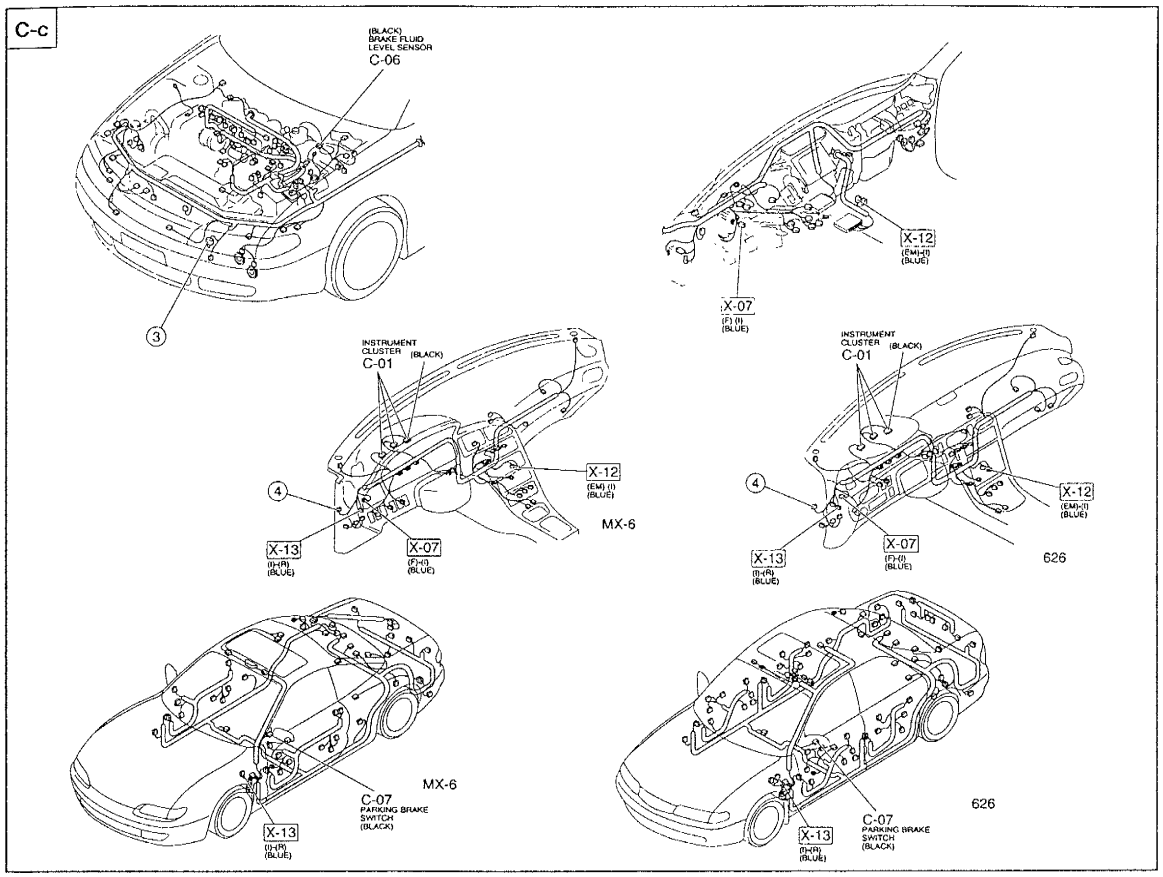
C-c
(BLACK)
BRAKE FLUID
LEVEL SENSOR
C-06
3
X-12
(EM)-(I)
(BLUE)
X-07
(F)-(I)
(BLUE)
INSTRUMENT
CLUSTER (BLACK)
C-01
4
X-13
(I)-(R)
(BLUE)
MX-6
626
C-07
PARKING BRAKE
SWITCH
(BLACK)

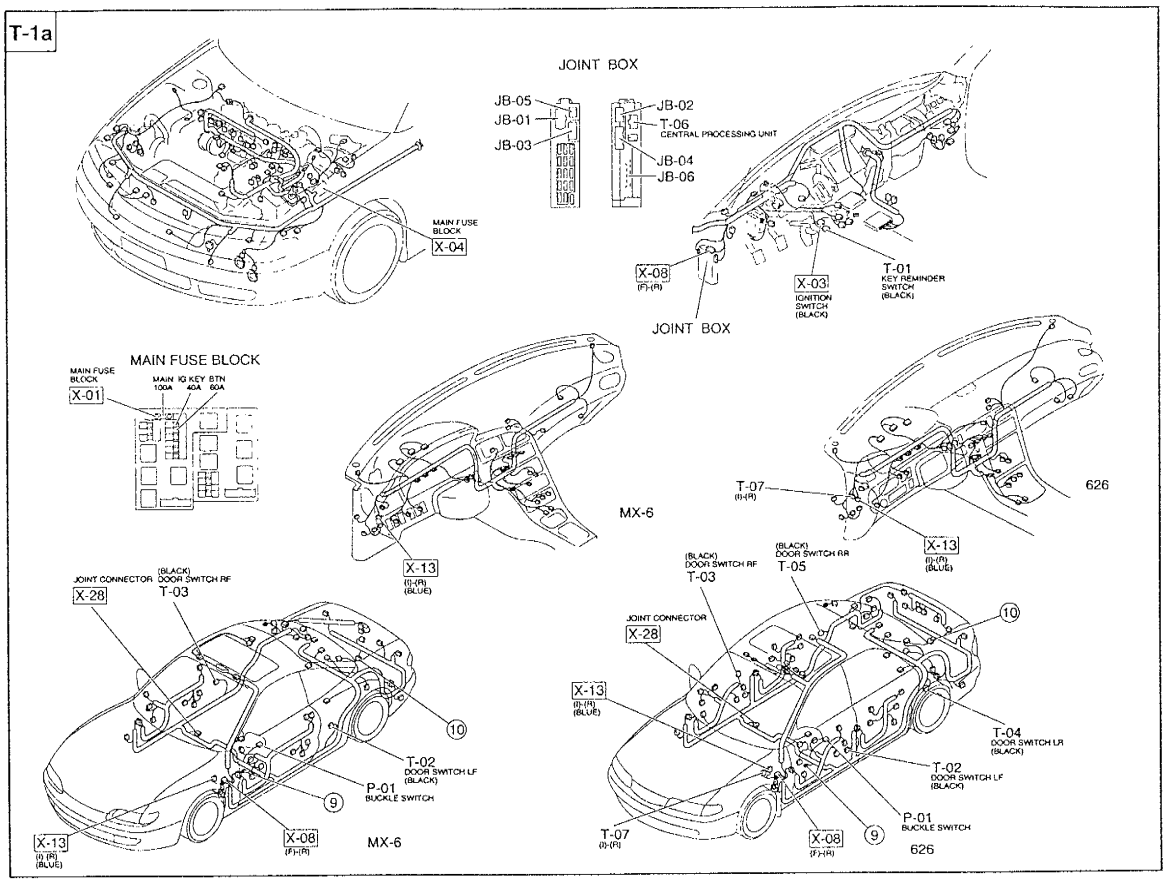
T-1a
JOINT BOX
JB-05
JB-01
JB-03
JB-02
T-06
CENTRAL PROCESSING UNIT
JB-04
JB-06
MAIN FUSE
BLOCK
X-04
X-08
(F)-(R)
X-03
IGNITION
SWITCH
(BLACK)
T-01
KEY REMINDER
SWITCH
(BLACK)
MAIN FUSE BLOCK
MAIN FUSE
BLOCK
X-01
MAIN IG KEY BTN
100A 40A 60A
X-13
(I)-(R)
(BLUE)
MX-6
T-07
(I)-(R)
626
(BLACK)
DOOR SWITCH RF
T-03
JOINT CONNECTOR
X-28
10
T-02
DOOR SWITCH LF
(BLACK)
P-01
BUCKLE SWITCH
9
X-08
(F)-(R)
(BLACK)
DOOR SWITCH RR
T-05
T-04
DOOR SWITCH LR
(BLACK)

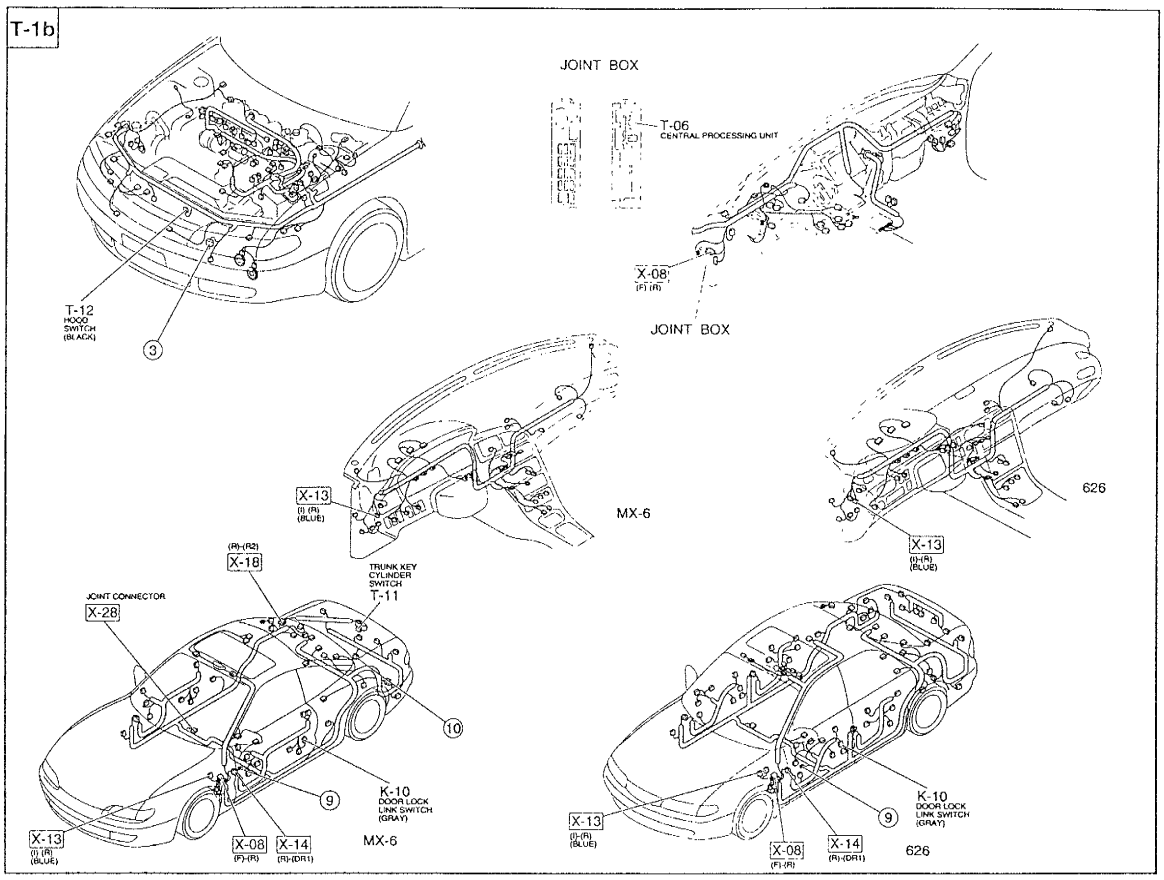
T-1b
JOINT BOX
T-06
CENTRAL PROCESSING UNIT
X-08
(F)-(R)
JOINT BOX
T-12
HOOD
SWITCH
(BLACK)
3
X-13
(I)-(R)
(BLUE)
MX-6
626
X-13
(I)-(R)
(BLUE)
(R)-(R2)
X-18
TRUNK KEY
CYLINDER
SWITCH
T-11
JOINT CONNECTOR
X-28
10
9
K-10
DOOR LOCK
LINK SWITCH
(GRAY)
X-13
(I)-(R)
(BLUE)
X-08
(F)-(R)
X-14
(R)-(DR1)
MX-6
X-13
(I)-(R)
(BLUE)
9
K-10
DOOR LOCK
LINK SWITCH
(GRAY)
X-08
(F)-(R)
X-14
(R)-(DR1)
626

Checklist

Check the bulb of each warning light before troubleshooting. If the bulbs are OK, refer to the flowcharts and inspect each warning system.

Procedure / Proper operation	Symptom	Flowchart No.
1. Turn the ignition switch to ON. 2. Verify that all warning lights illuminate (brake, ABS, MIL, fuel, oil, generator).	Warning lights do not illuminate with ignition switch at ON (engine stopped)	1
	Generator warning light does not illuminate with ignition switch at ON (engine stopped)	2
	ABS warning light does not illuminate with ignition switch at ON (engine stopped)	3
	Brake system warning light does not illuminate with parking brake lever set	4
	Oil pressure warning light does not illuminate with ignition switch at ON (engine stopped)	5
	Air bag system warning light does not illuminate for 4—8 seconds after ignition switch is turned to ON (engine stopped)	section S

Warning System Check

Refer to section S for air bag system warning light symptoms.
Refer to section T2 for security light symptoms.

Warning light	Procedure / Proper operation	Symptom	Flowchart No.
Washer (Canada)	1. Start engine 2. Verify that washer fluid-level warning light goes out. 3. Verify that washer fluid-level warning light illuminates (when washer fluid level low)	Washer fluid-level warning light remains illuminated (engine running)	6
		Washer fluid-level warning light does not illuminate with washer fluid level low (engine running)	7
Fuel	1. Start engine. 2. Verify that fuel-level warning light turns off. 3. Verify that fuel-level warning light illuminates when fuel tank is almost empty.	Fuel-level warning light remains illuminated (engine running)	8
		Fuel-level warning light does not illuminate with fuel tank almost empty (engine running)	9
ABS	1. Start engine. 2. Verify that ABS warning light turns off. 3. Verify that ABS warning light illuminates when ABS system malfunctions.	ABS warning light remains illuminated (engine running)	1996 626/MX-6 Workshop Manual, section P
		ABS warning light does not illuminate when ABS malfunctions (engine running)	
MIL	1. Start engine. 2. Verify that malfunction indicator lamp turns off. 3. Verify that malfunction indicator lamp illuminates when PCM malfunctions.	Malfunction indicator lamp remains illuminated (engine running)	1996 626/MX-6 Workshop Manual, section F
		Malfunction indicator lamp does not illuminate when PCM malfunctions (engine running)	

Warning light	Procedure / Proper operation	Symptom	Flowchart No.
Oil	1. Start engine. 2. Verify that oil pressure warning light turns off.	Oil pressure warning light remains illuminated (engine running)	10
Seat belt	1. Turn ignition switch to ON with seat belt unfastened. 2. Verify that seat belt warning light and alarm operate. 3. Turn ignition switch to LOCK. 4. Turn ignition switch to ON and fasten seat belt within 4—8 seconds. 5. Verify that seat belt alarm stops.	Seat belt warning light and alarm do not operate	11
		Seat belt alarm sounds; warning light does not illuminate	12
		Seat belt warning light illuminates; alarm does not sound	13
		Seat belt alarm sounds for 4 to 8 seconds after ignition switch is turned to ON (belt fastened)	
Door ajar	1. Turn ignition switch to ON. 2. Open any door. 3. Verify that door ajar warning light illuminates. 4. Close all doors. 5. Verify that door ajar warning light turns off.	Door ajar warning light does not illuminate with any door open	14
		Door ajar warning light remains on with all doors closed	15
Brake	1. Start engine. 2. Set parking brake. 3. Verify that brake system warning light illuminates. 4. Release parking brake. 5. Verify that brake system warning light turns off. 6. Verify that brake system warning light illuminates when brake fluid in reservoir is below MIN.	Brake system warning light does not illuminate with parking brake lever set	4
		Brake system warning light remains illuminated with parking brake released and brake fluid level above MIN	16
		Brake system warning light does not illuminate with brake fluid in reservoir below MIN	17
Ignition key reminder	1. Turn ignition switch to LOCK or ACC. 2. Open any door. 3. Verify that ignition key reminder alarm sounds.	Ignition key reminder alarm does not sound	18
Lights-on reminder	1. Turn light switch on. 2. Turn ignition switch to LOCK or ACC. 3. Open any door. 4. Verify that lights-on reminder alarm sounds.	Lights-on reminder alarm does not sound	19

Flowchart No. 1	Symptom	Warning lights do not illuminate with ignition switch at ON (engine stopped)

Possible cause
- Burnt METER 15A fuse
- Open or short circuit in wiring harness
- Poor connection of connector

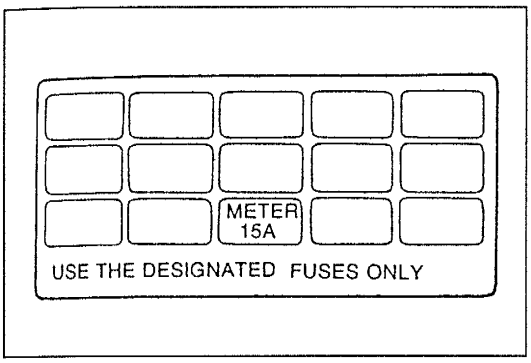

Step 1
Check the METER 15A fuse in the fuse block.

Fuse	Action
OK	Go to Step 2
Burnt	Replace fuse after checking and repairing wiring harness

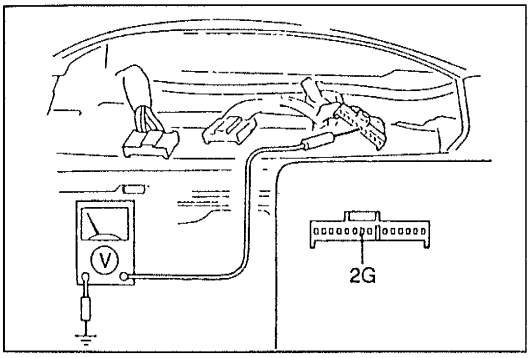

Step 2
1. Remove the instrument cluster. (Refer to section C1.)
2. Turn the ignition switch to ON.
3. Measure the voltage at terminal 2G (B/Y) of instrument cluster connector.

B+: Battery positive voltage

Voltage	Action
B+	Go to Step 3
Other	Repair wiring harness (METER 15A fuse—Instrument cluster)

Step 3
Refer to the flowchart numbers shown.

Symptom	Flowchart No.	Page
Generator warning light	2	C2–18
ABS warning light	3	C2–19
Brake system warning light	4	C2–20
Oil pressure warning light	5	C2–21

Flowchart No. 2	Symptom	Generator warning light does not illuminate with ignition switch at ON (engine stopped)

Possible cause
- Damaged generator
- Damaged instrument cluster
- Open or short circuit in wiring harness
- Poor connection of connector

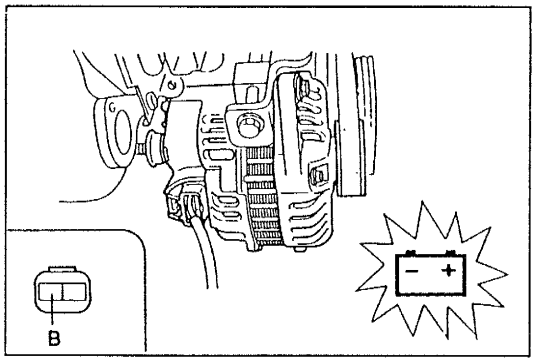

Step 1
1. Disconnect the generator connector and connect ground to terminal B (W/B).
2. Turn the ignition switch to ON and verify that the warning light illuminates.

Light	Action
Illuminates	Inspect generator (Refer to 1996 626/MX-6Workshop Manual, section G)
Does not illuminate	Go to Step 2

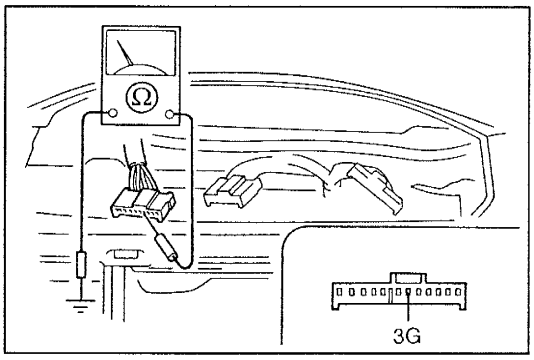

Step 2
1. Turn the ignition switch to LOCK and connect the generator connector.
2. Remove the instrument cluster. (Refer to section C1.)
3. Disconnect instrument cluster connector.
4. Check for continuity between terminal 3G (W/B) of instrument cluster connector and ground.

Continuity	Action
Yes	Repair wiring harness (Instrument cluster—Generator)
No	Go to Step 3

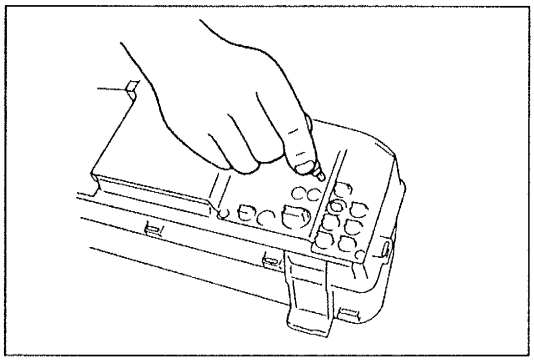

Step 3
Remove and check the bulb of the warning light.

Bulb	Action
OK	Replace instrument cluster (Refer to section C1)
Burnt	Replace bulb

Flowchart No. 3	Symptom	ABS warning light does not illuminate with ignition switch at ON (engine stopped)

Possible cause
- Burnt ABS warning light bulb
- Damaged instrument cluster
- Damaged ABS control module
- Open or short circuit in wiring harness
- Poor connection of connector

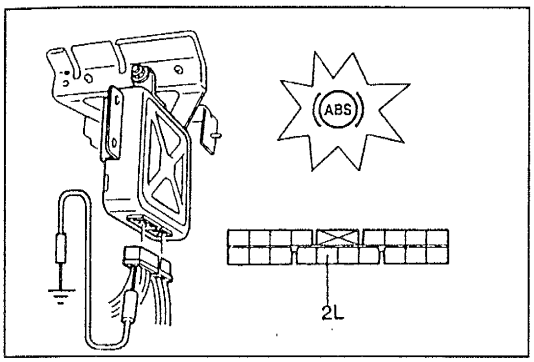

Step 1
1. Disconnect the ABS control module connector and turn the ignition switch to ON.
2. Ground terminal 2L (L/Y) of the ABS control module connector and verify that the warning light illuminates.

Light	Action
Illuminates	Inspect ABS control module (Refer to the 1996 626/MX-6 Workshop Manual, section P)
Does not illuminate	Turn ignition switch to LOCK, and go to Step 2

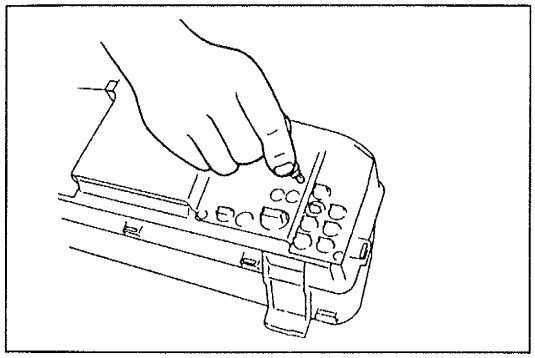

Step 2
1. Remove the instrument cluster. (Refer to section C1.)
2. Remove and check the ABS warning light bulb.

Bulb	Action
OK	Go to Step 3
Burnt	Replace bulb

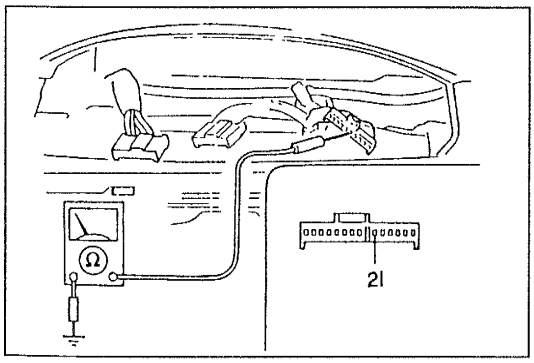

Step 3
Check for continuity between terminal 2I (L/Y) of instrument cluster connector and ground.

Continuity	Action
Yes	Replace instrument cluster (Refer to section C1)
No	Repair wiring harness (Instrument cluster—ABS control module)

Flowchart No. 4	Symptom	Brake system warning light does not illuminate with parking brake lever set

Possible cause
- Damaged parking brake switch
- Burnt brake system warning light bulb
- Damaged instrument cluster
- Open or short circuit in wiring harness
- Poor connection of connector

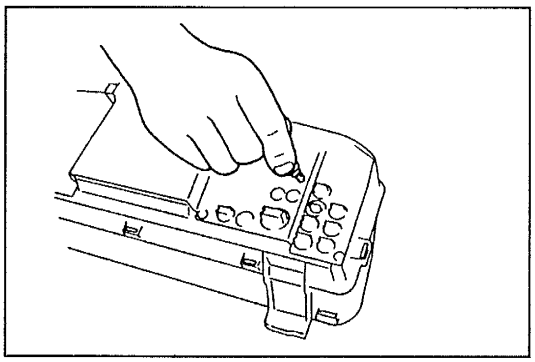

Step 1
1. Remove the instrument cluster. (Refer to section C1.)
2. Remove and check the brake system warning light bulb.

Bulb	Action
OK	Install the bulb and go to Step 2
Burnt	Replace bulb

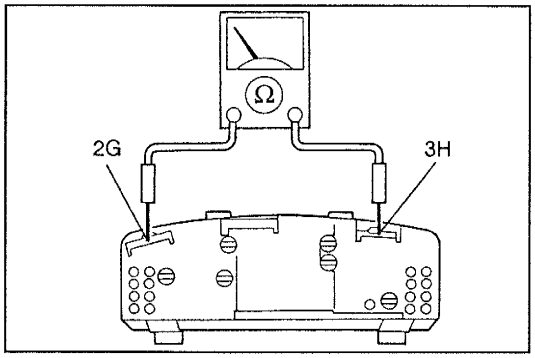

Step 2
1. Disconnect instrument cluster connector.
2. Check for continuity between terminals 2G and 3H of the instrument cluster connector.

Continuity	Action
Yes	Go to Step 3
No	Replace print plate (Refer to section C1)

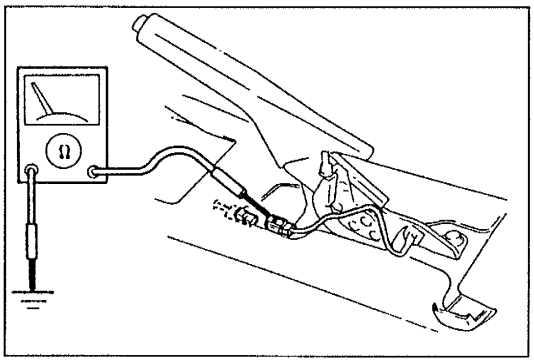

Step 3
1. Disconnect the parking brake switch connector.
2. Check for continuity between the switch terminal and ground.

Parking brake	Continuity
Set	Yes
Released	No

3. If correct, repair the wiring harness (instrument cluster—parking brake switch).
4. If not as specified, adjust or replace the parking brake switch. (Refer to the 1996 626/MX-6 Workshop Manual, section P.)

Flowchart No. 5	Symptom	Oil pressure warning light does not illuminate with ignition switch at ON (engine stopped)

Possible cause
- Burnt oil pressure warning light bulb
- Damage oil pressure switch
- Open or short circuit in wiring harness
- Poor connection of connector

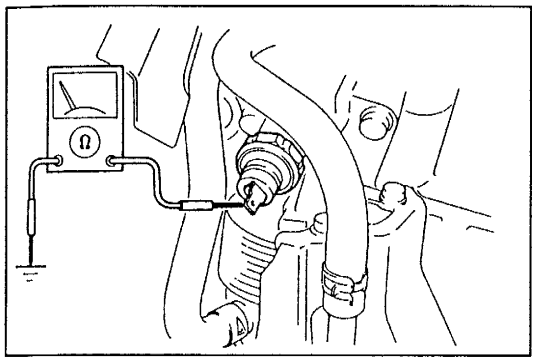

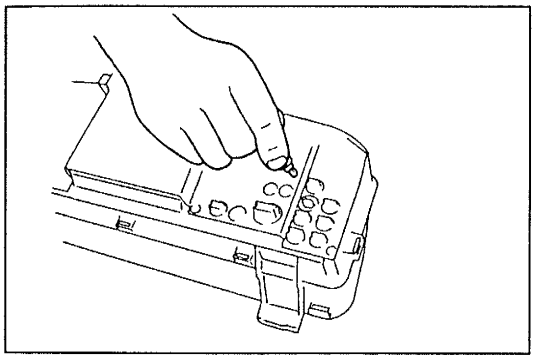

Step 1
1. Disconnect the oil pressure switch connector.
2. Start the engine and check for continuity between the switch terminal and ground

Engine condition	Continuity
Running	No
Stopped	Yes

3. If correct, go to Step 2.
4. If not as specified, replace the oil pressure switch. (Refer to the 1996 626/MX-6 Workshop Manual, section D.)

Step 2
1. Turn the ignition switch to LOCK.
2. Remove the instrument cluster. (Refer to section C1.)
3. Remove and check the oil pressure warning light bulb.

Bulb	Action
OK	Repair wiring harness (Instrument cluster—Oil pressure switch)
Burnt	Replace bulb

Flowchart No. 6	Symptom	Washer fluid-level warning light remains illuminated (engine running)

Possible cause
- Shortage of washer fluid
- Damaged washer fluid-level sensor
- Short circuit of wiring harness

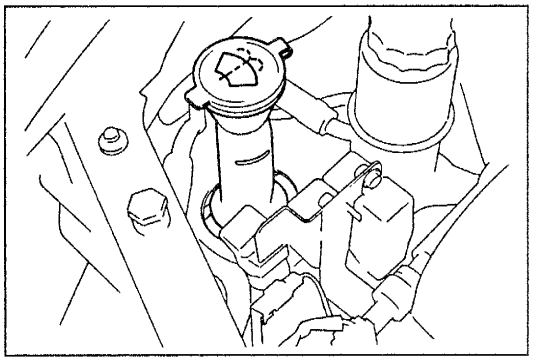

Step 1
Check for the washer fluid level.

Washer fluid level	Action
Between L and F	Go to Step 2
Below L	Supply washer fluid

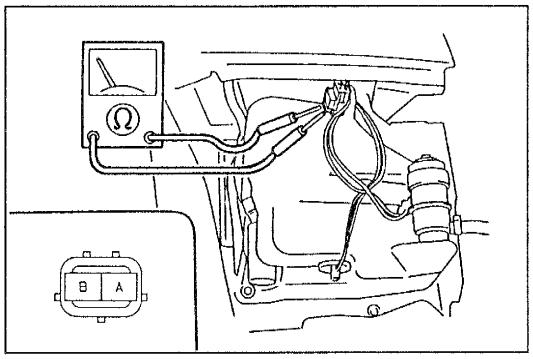

Step 2
1. Disconnect the washer fluid-level sensor connector.
2. Check for continuity between terminals A and B of the washer fluid-level sensor.

Washer fluid level	Continuity
Below MIN	Yes
Above MIN	No

3. If not as specified, replace the washer fluid-level sensor.
4. If correct, repair the wiring harness (instrument cluster—washer fluid-level sensor).

Flowchart No. 7	Symptom	Washer fluid-level warning light does not illuminate with washer fluid level low (engine running)

Possible cause
- Damaged washer fluid-level sensor
- Open circuit in wiring harness
- Poor connection of connector

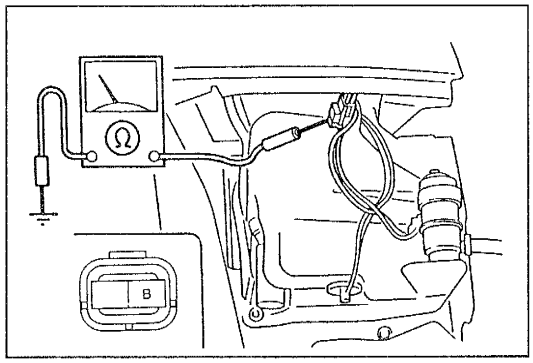

Step 1
1. Disconnect the washer fluid-level sensor connector.
2. Check for continuity between terminal B (B/Y) of the washer fluid-level sensor connector and ground.

Continuity	Action
Yes	Go to Step 2
No	Repair wiring harness (Washer fluid-level sensor—Ground)

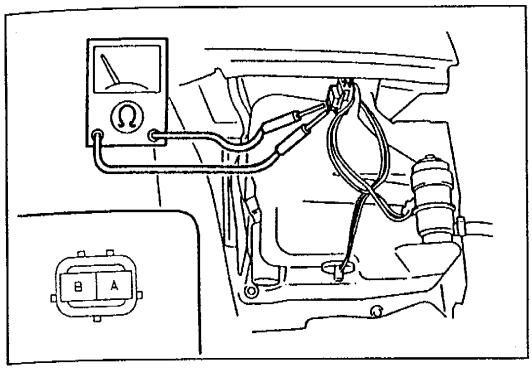

Step 2

1. Check for continuity between terminals A and B of the washer fluid-level sensor.

Washer fluid level	Continuity
Below MIN	Yes
Above MIN	No

2. If not as specified, replace the washer fluid-level sensor.
3. If correct, repair the wiring harness (instrument cluster—washer fluid level sensor).

Flowchart No. 8	Symptom	Fuel-level warning light remains illuminated (engine running)

Possible cause

- Shortage of fuel
- Damaged fuel gauge sender unit
- Open or short circuit in wiring harness

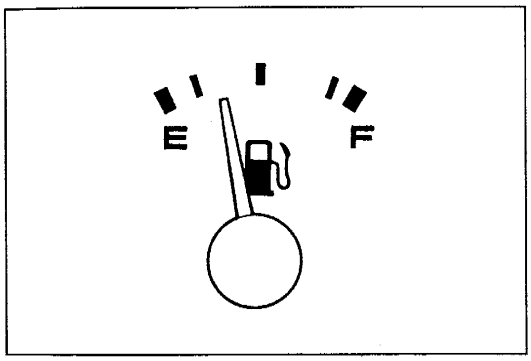

Step 1

1. Turn the ignition switch to ON.
2. Verify that the fuel gauge indicates the correct values.

Gauge display	Action
Moves	Go to Step 2
Does not move	Troubleshoot fuel gauge (Refer to section C1)

Step 2

Check the fuel level.

Fuel level	Action
OK	Replace instrument cluster
Empty	Add fuel

Flowchart No. 9	Symptom	Fuel-level warning light does not illuminate with fuel tank almost empty (engine running)

Possible cause
- Burnt fuel-level warning light bulb
- Damaged instrument cluster

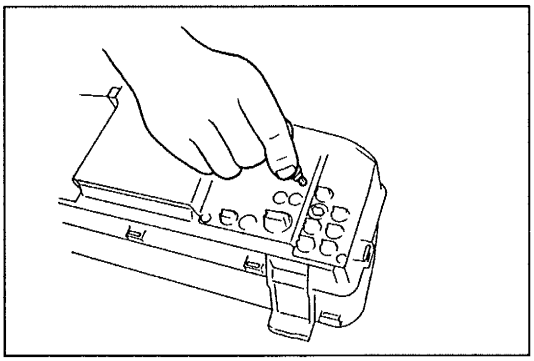

Step 2
1. Remove the instrument cluster.
   (Refer to section C1.)
2. Remove and check the fuel-level warning light bulb.

Bulb	Action
OK	Replace instrument cluster
Burnt	Replace fuel-level warning light bulb.

Flowchart No. 10	Symptom	Oil pressure warning light remains illuminated (engine running)

Possible cause
- Low oil pressure
- Damaged oil pressure switch
- Open or short circuit in wiring harness

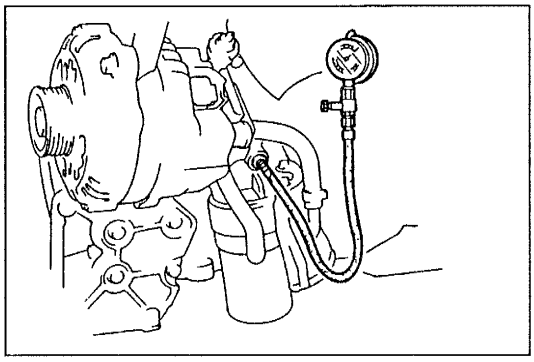

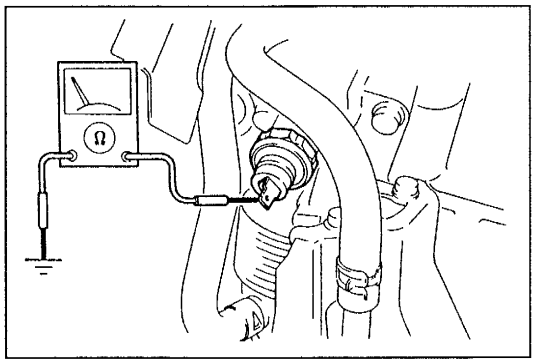

Step 1
1. Measure the engine oil pressure.
   (Refer to the 1996 626/MX-6 Workshop Manual, section D.)

   Oil pressure:
   340—490 kPa {3.4—5.0 kgf/cm², 49—71 psi}
   at 3,000 rpm (KL)
   400—490 kPa {4.0—5.0 kgf/cm², 51—71 psi}
   at 3,000 rpm (FS)

2. If correct, go to Step 2.
3. If not as specified, inspect the lubrication system.
   (Refer to the 1996 626/MX-6 Workshop Manual, section D.)

Step 2
1. Disconnect the oil pressure switch connector.
2. Start the engine and check for continuity between the oil pressure switch terminal and ground.

Engine condition	Continuity
Running	No
Stopped	Yes

3. If correct, repair the wiring harness (instrument cluster—oil pressure switch).
4. If not as specified, replace the oil pressure switch.
   (Refer to the 1996 626/MX-6 Workshop Manual, section D.)

Flowchart No. 11	Symptom	Seat belt warning light and alarm do not operate

Possible cause
- Damaged CPU
- Damaged buckle switch
- Open or short circuit in wiring harness
- Poor connection of connector

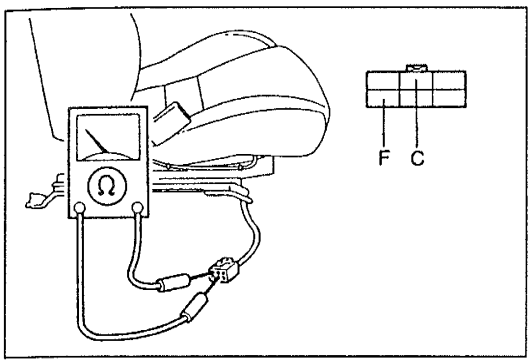

Step 1
1. Disconnect the buckle switch connector.
2. Check for continuity between terminals C and F of the switch.

O–O : Continuity

Terminal / Seat belt	C	F
Fastened		
Unfastened	O	O

3. If correct, go to Step 2.
4. If not as specified, replace the buckle.

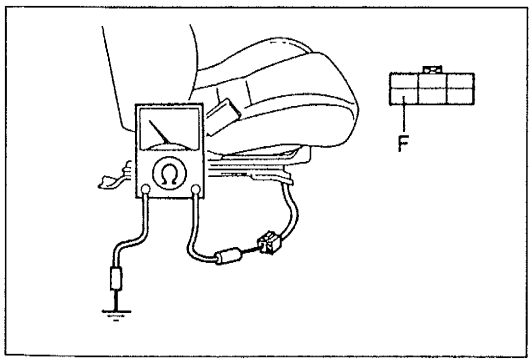

Step 2
Check for continuity between terminal F (B) of the buckle switch connector and ground.

Continuity	Action
Yes	Reconnect buckle switch connector and go to Step 3
No	Repair warning harness (Buckle switch—GND)

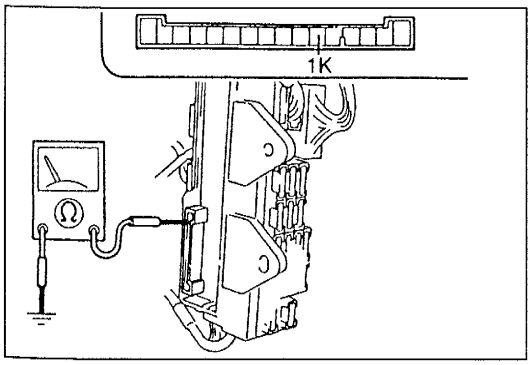

Step 3
1. Remove the CPU from the joint box. (Refer to section Z3.)
2. With the driver's seat belt unfastened, check for continuity between terminal 1K of the CPU connector on the joint box and ground.

Continuity	Action
Yes	Replace CPU (Refer to section Z3)
No	Repair wiring harness (CPU—Buckle switch)

Flowchart No.12	Symptom	Seat belt warning alarm sounds; warning light does not illuminate

Possible cause
- Burnt seat belt warning light bulb
- Open or short circuit in wiring harness

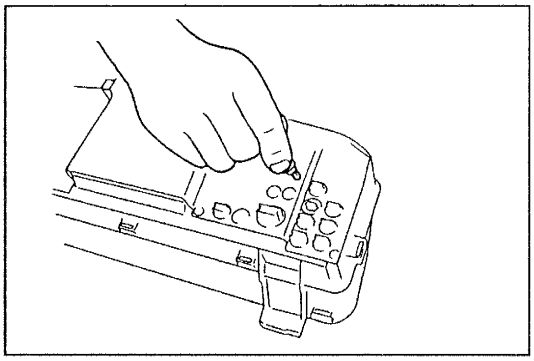

Remedy
1. Remove the instrument cluster.
   (Refer to section C1.)
2. Remove and check the seat belt warning light bulb.

Bulb	Action
OK	Repair wiring harness (Instrument cluster—CPU)
Burnt	Replace seat belt warning light bulb

Flowchart No.13	Symptom	Seat belt warning light illuminates; warning alarm does not sound Seat belt warning alarm sounds for 4 to 8 seconds after ignition switch is turned to ON (belt fastened)

Possible cause
- Damaged CPU

Remedy
- Replace the CPU.
  (Refer to section Z3.)

Flowchart No.14	Symptom	Door ajar warning light does not illuminate with any door open

Possible cause
- Burnt door ajar warning light bulb
- Damaged CPU
- Damaged door switch
- Open or short circuit in wiring harness
- Poor connection of connector

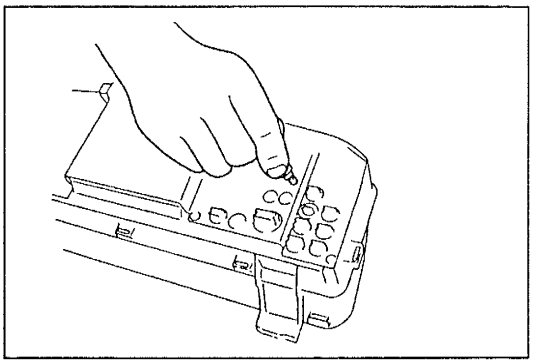

Step 1
1. Remove the instrument cluster.
   (Refer to section C1.)
2. Remove and check the door ajar warning light bulb.

Bulb	Action
OK	Go to Step 2
Burnt	Replace bulb

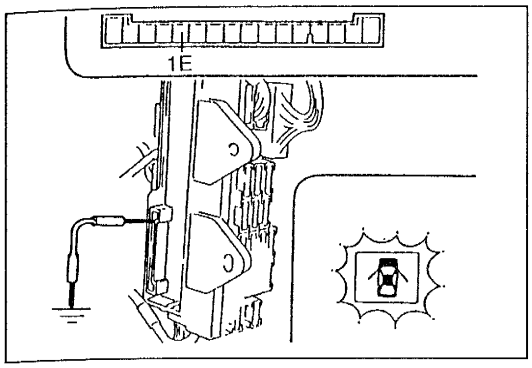

Step 2
1. Remove the CPU from the joint box. (Refer to section Z3.)
2. Ground terminal 1E of the CPU on the joint box and verify that the door ajar warning light illuminates.

Light	Action
Illuminates	Go to Step 3
Does not illuminate	Repair wiring harness (Instrument cluster—CPU)

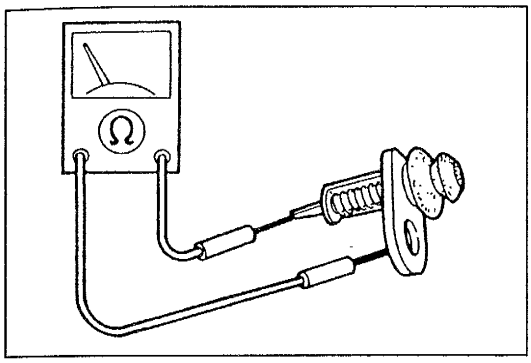

Step 3
1. Remove the door switches.
2. Check for continuity between the terminals of each switch.

Switch	Continuity
Pressed	No
Released	Yes

3. If correct, repair the wiring harness (CPU—door switch).
4. If not as specified, replace the door switch.

Flowchart No.15	Symptom	Door ajar warning light remains on with all doors closed

Possible cause
- Damaged door switch
- Damaged CPU
- Open or short circuit in wiring harness

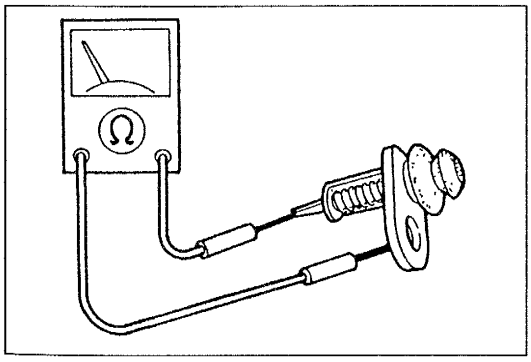

Step 1
1. Remove the door switches.
2. Check for continuity between the terminals of each switch.

Switch	Continuity
Pressed	No
Released	Yes

3. Install door switches and go to Step 2.
4. If not as specified, replace the door switch.

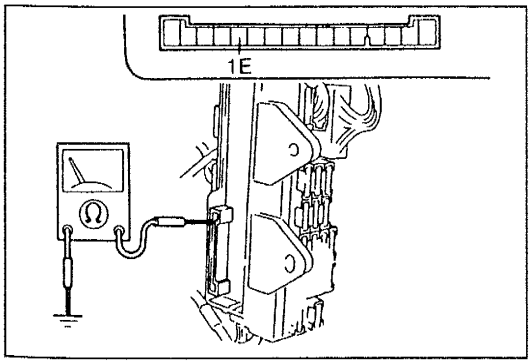

Step 2
1. Close all doors.
2. Remove the CPU from the joint box. (Refer to section Z3.)
3. Check for continuity between terminal 1E of the CPU connector on the joint box and ground.

Continuity	Action
Yes	Repair wiring harness (CPU—Door switch)
No	Replace CPU (Refer to section Z3)

Flowchart No.16	Symptom	Brake system warning light remains illuminated with parking brake released and brake fluid level above MIN

Possible cause
- Damaged parking brake switch
- Short circuit of wiring harness

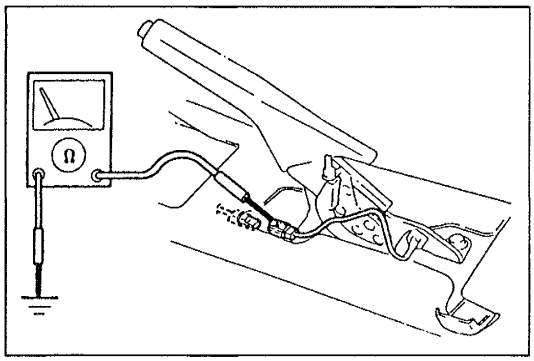

Remedy
1. Disconnect the parking brake switch connector.
2. Check for continuity between the switch terminal and ground.

Parking brake	Continuity
Set	Yes
Release	No

3. If correct, repair the wiring harness (instrument cluster—parking brake switch).
4. If not as specified, replace the parking brake switch. (Refer to the 1996 626/MX-6 Workshop Manual, section P.)

Flowchart No.17	Symptom	Brake system warning light does not illuminate with brake fluid in reservoir below MIN

Possible cause
- Damaged brake fluid level sensor
- Open or short circuit in wiring harness
- Poor connection of connector

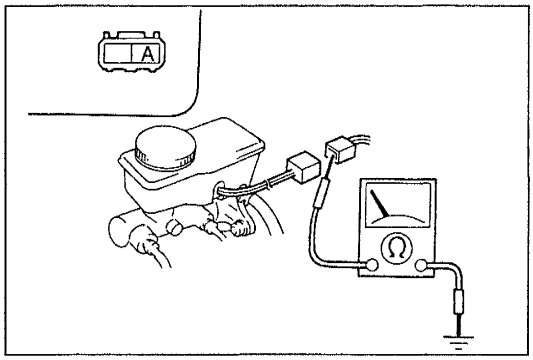

Step 1
1. Disconnect the brake fluid level sensor connector.
2. Check for continuity between terminal A (B) of the brake fluid level sensor connector and ground.

Continuity	Action
Yes	Go to Step 2
No	Repair wiring harness (Brake fluid level sensor—GND)

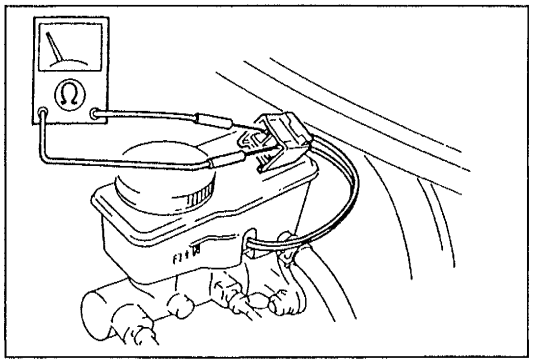

Step 2
1. Check for continuity between the terminals of the brake fluid level sensor.

Fluid level	Continuity
Below MIN	Yes
Above MIN	No

2. If correct, repair the wiring harness (instrument cluster—brake fluid level sensor).
3. If not as specified, replace the brake fluid level sensor. (Refer to the 1996 626/MX-6 Workshop Manual, section P.)

Flowchart No.18	Symptom	Ignition key reminder alarm does not sound

Possible cause
- Burnt ROOM 15A fuse
- Damaged key reminder switch
- Damaged door switch
- Damaged CPU
- Open or short circuit in wiring harness
- Poor connection of connector

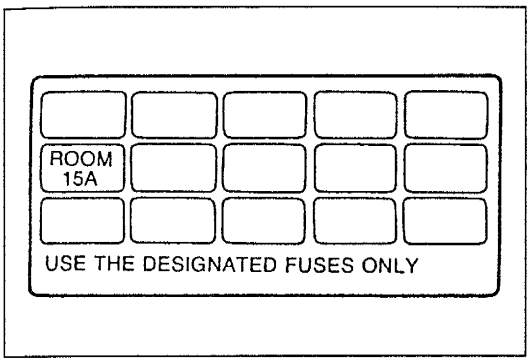

Step 1
Check the ROOM 15A fuse in the fuse block.

Fuse	Action
OK	Go to Step 2
Burnt	Replace fuse after checking and repairing wiring harness

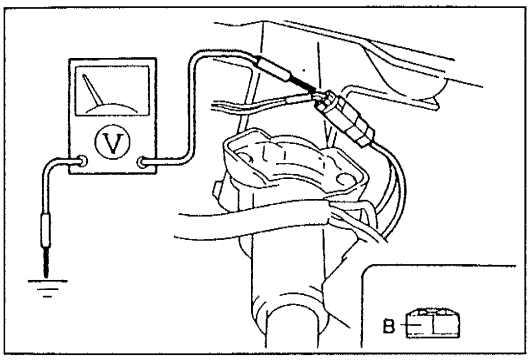

Step 2
1. Remove the column cover.
2. Measure the voltage at terminal B (L/R) of the key reminder switch connector.

B+: Battery positive voltage

Voltage	Action
B+	Go to Step 3
Other	Repair wiring harness (ROOM 15A fuse—Key reminder switch)

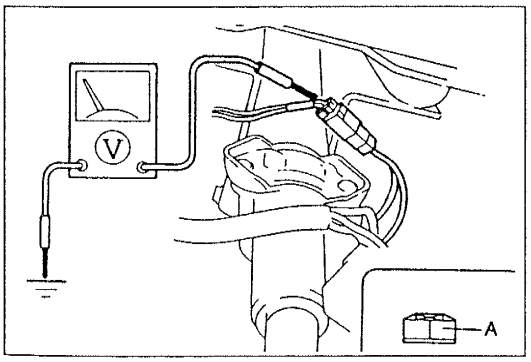

Step 3
1. Measure the voltage at terminal A (P) of the key reminder switch.

B+: Battery positive voltage

Ignition key	Voltage
Inserted	B+
Removed	Other

2. If correct, go to Step 4.
3. If not as specified, replace the key reminder switch.

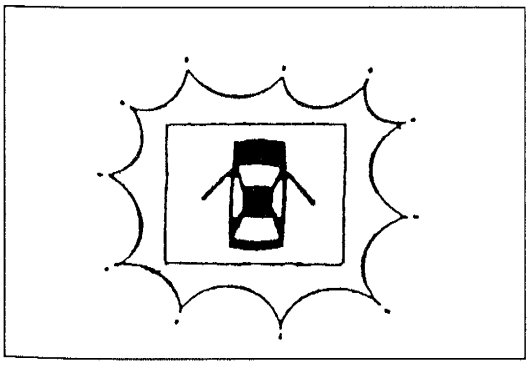

Step 4
Verify that the door ajar warning light illuminates when any door is opened.

Light	Action
Illuminates	Go to Step 7
Does not illuminate	Go to Step 5

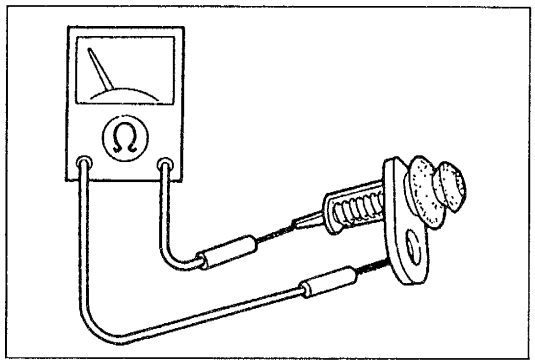

Step 5
1. Remove the door switches.
2. Check for continuity between the terminals of each switch.

Switch	Continuity
Pressed	No
Released	Yes

3. If correct, go to Step 6.
4. If not as specified, replace the door switch.

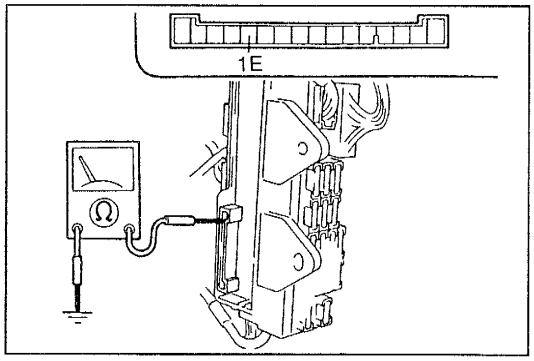

Step 6
1. Open each door.
2. Check for continuity between terminal 1E of the CPU connector on the joint box and ground.

Continuity	Action
Yes	Replace CPU (Refer to section Z3)
No	Repair wiring harness (Door switch—CPU)

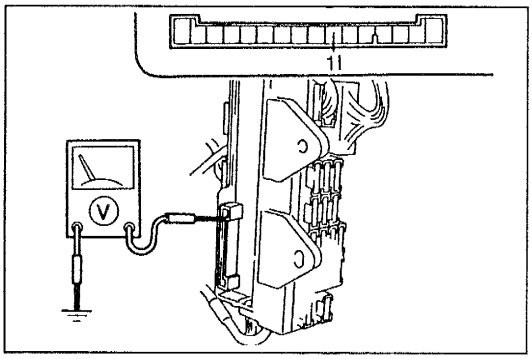

Step 7
1. Remove the CPU from the joint box. (Refer to section Z3.)
2. Insert the ignition key into the ignition switch.
3. Measure the voltage at terminal 1I of the CPU connector on the joint box.

B+: Battery positive voltage

Switch	Action
B+	Replace CPU (Refer to section Z3)
Other	Repair wiring harness (Key reminder switch—CPU)

Flowchart No.19	Symptom	Lights-on reminder alarm does not sound

Possible cause
- Damaged CPU
- Damaged door switch
- Open or short circuit in wiring harness
- Poor connection of connector

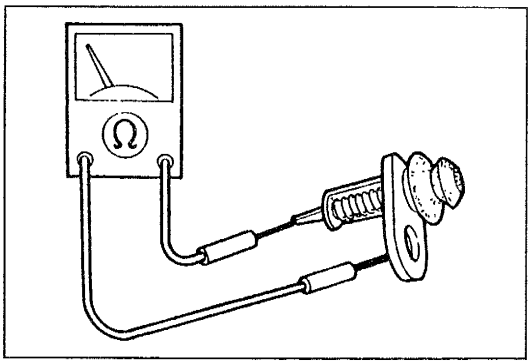

Step 1
1. Remove the door switches.
2. Check for continuity between the terminals of each switch.

Switch	Continuity
Pressed	No
Released	Yes

3. Install door switch and go to Step 2.
4. If not as specified, replace the door switch.

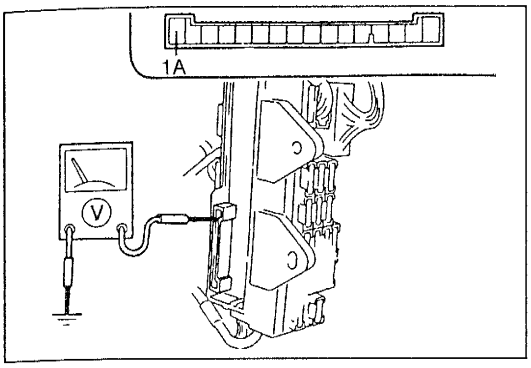

Step 2

1. Remove the CPU from the joint box. (Refer to section Z3.)
2. Turn the ignition switch to LOCK.
3. Measure the voltage at terminal 1A of the CPU connector on the joint box.

B+: Battery positive voltage

Voltage	Action
B+	Repair wiring harness (ROOM 15A fuse—CPU)
Other	Go to step 3

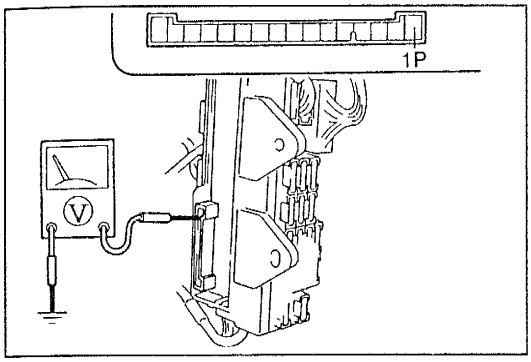

Step 3

1. Turn the headlight switch on.
2. Measure the voltage at terminal 1P of the CPU connector on the joint box.

B+: Battery positive voltage

Voltage	Action
B+	Go to Step 4
Other	Repair wiring harness (TAIL 15A fuse—CPU)

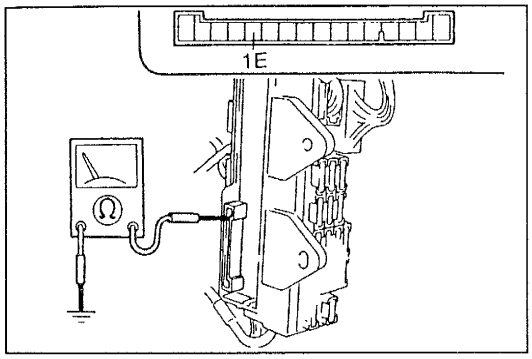

Step 4

1. Open each door.
2. Check for continuity between terminal 1E of the CPU connector on the joint box and ground.

Continuity	Action
Yes	Replace CPU (Refer to section Z3)
No	Repair wiring harness (Door switch—CPU)

WARNING LIGHT BULBS

Replacement

1. Remove the instrument cluster.
   (Refer to section C1.)
2. Replace the faulty bulbs. Use only the bulbs specified on page C2–3.

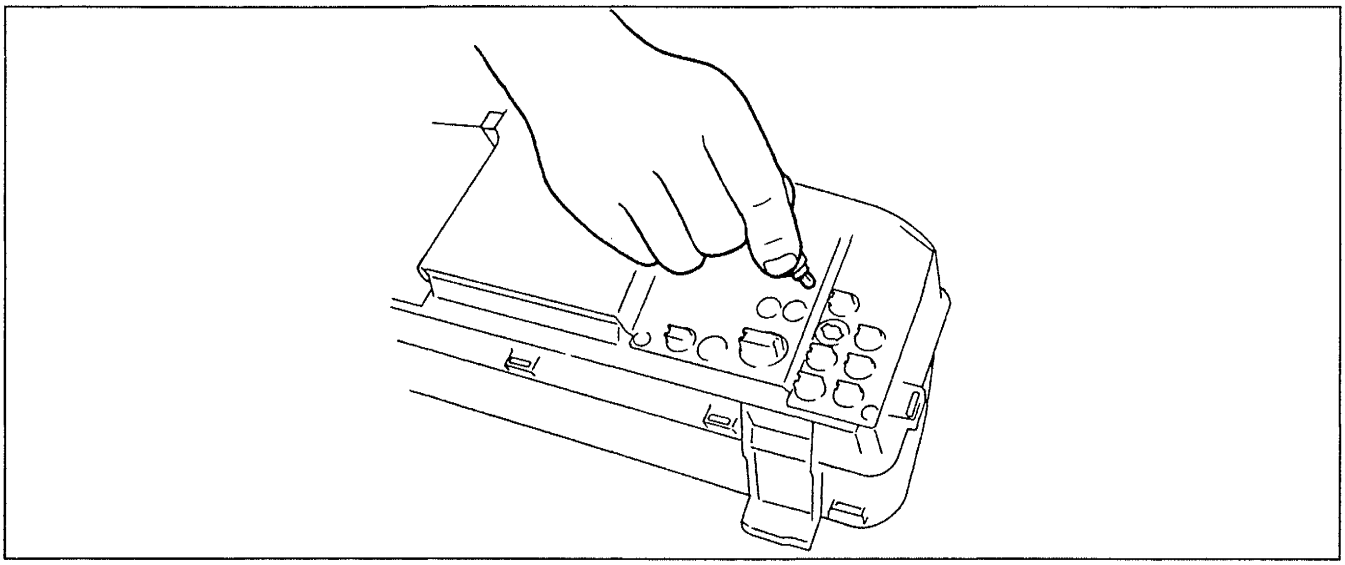

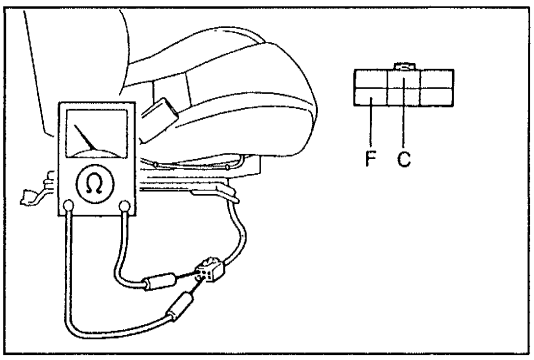

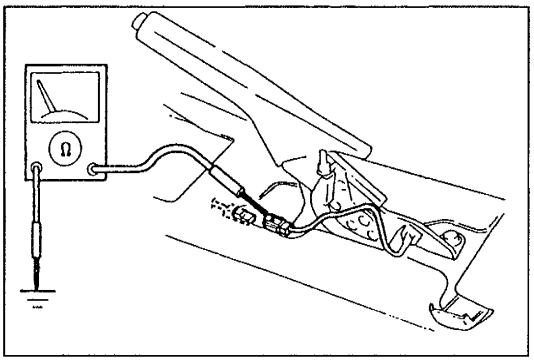

BUCKLE SWITCH

Inspection

1. Disconnect the buckle switch connector.
2. Check for continuity between terminals C and F of the switch.

O–O : Continuity

Terminal / Seat belt	C	F
Fastened		
Unfastened	O————	————O

3. If not as specified, replace the buckle.

PARKING BRAKE SWITCH

Inspection

1. Disconnect the parking brake switch connector.
2. Check for continuity between the switch terminal and ground.

Brake lever	Continuity
Pulled one notch	Yes
Released	No

3. If not as specified, replace the parking brake switch.
   (Refer to the 1996 626/MX-6 Workshop Manual, section P.)

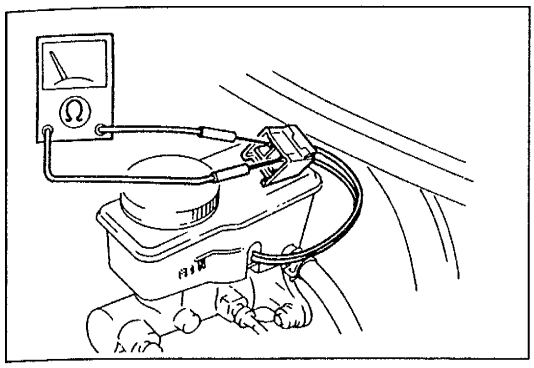

BRAKE FLUID LEVEL SENSOR

Inspection

1. Disconnect the brake fluid level sensor connector.
2. Check for continuity between the sensor terminals.

Fluid level	Continuity
Below MIN	Yes
Above MIN	No

3. If not as specified, replace the brake fluid level sensor. (Refer to the 1996 626/MX-6 Workshop Manual, section P.)

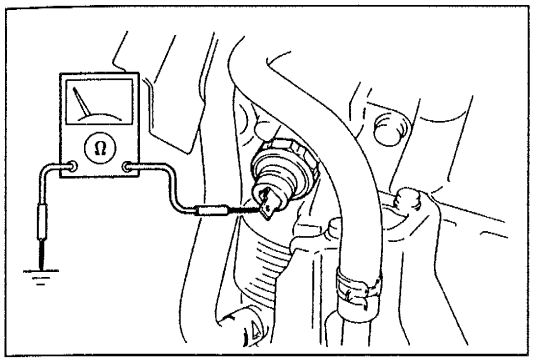

OIL PRESSURE SWITCH

Inspection

1. Disconnect the oil pressure switch connector.
2. Check for continuity between the oil pressure switch terminal and ground.

Engine condition	Continuity
Stopped	Yes
Running	No

3. If not as specified, replace the oil pressure switch. (Refer to the 1996 626/MX-6 Workshop Manual, section D.)

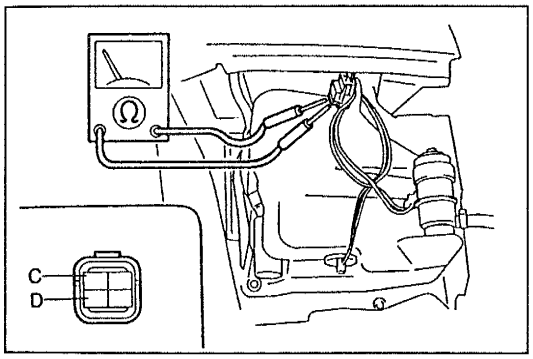

WASHER FLUID-LEVEL SENSOR

Inspection

1. Disconnect the washer fluid-level sensor connector.
2. Check for continuity between terminals C and D of the sensor as shown.

Fluid level	Continuity
Below MIN	Yes
Above MIN	No

3. If not as specified, replace the washer fluid-level sensor.

Before beginning any service procedure, refer to section S of this manual for air bag system service warnings.

WINDSHIELD WIPER AND WASHER

WINDSHIELD WIPER AND WASHER

STRUCTURAL VIEW

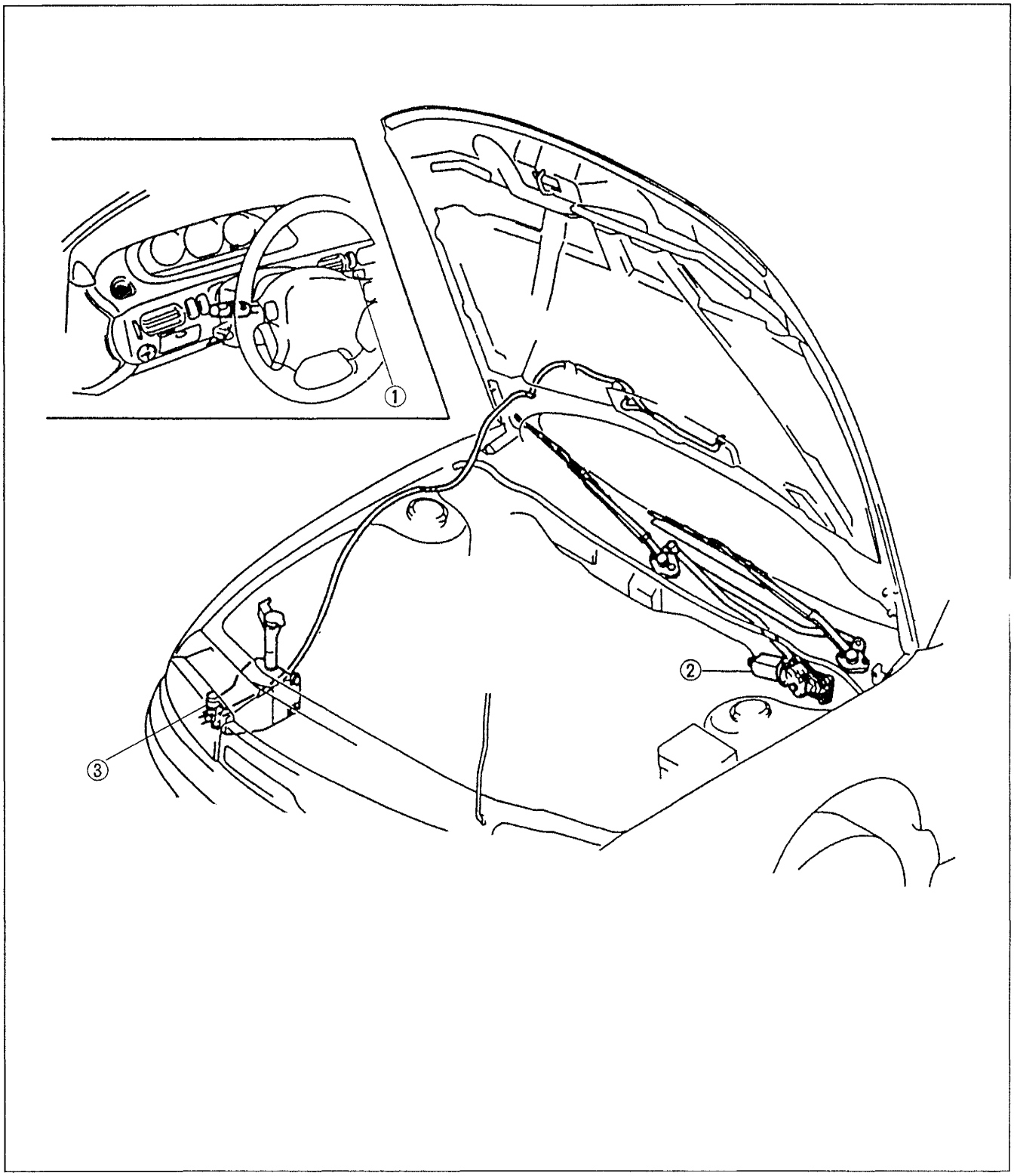

1. Windshield wiper and washer switch
   Inspection ..... page D–12
   Removal / Installation ..... section Z4
2. Windshield wiper motor
   Inspection ..... page D–12
   Removal / Installation ..... page D–13
3. Windshield washer motor
   Inspection ..... page D–12

SYSTEM DIAGRAM

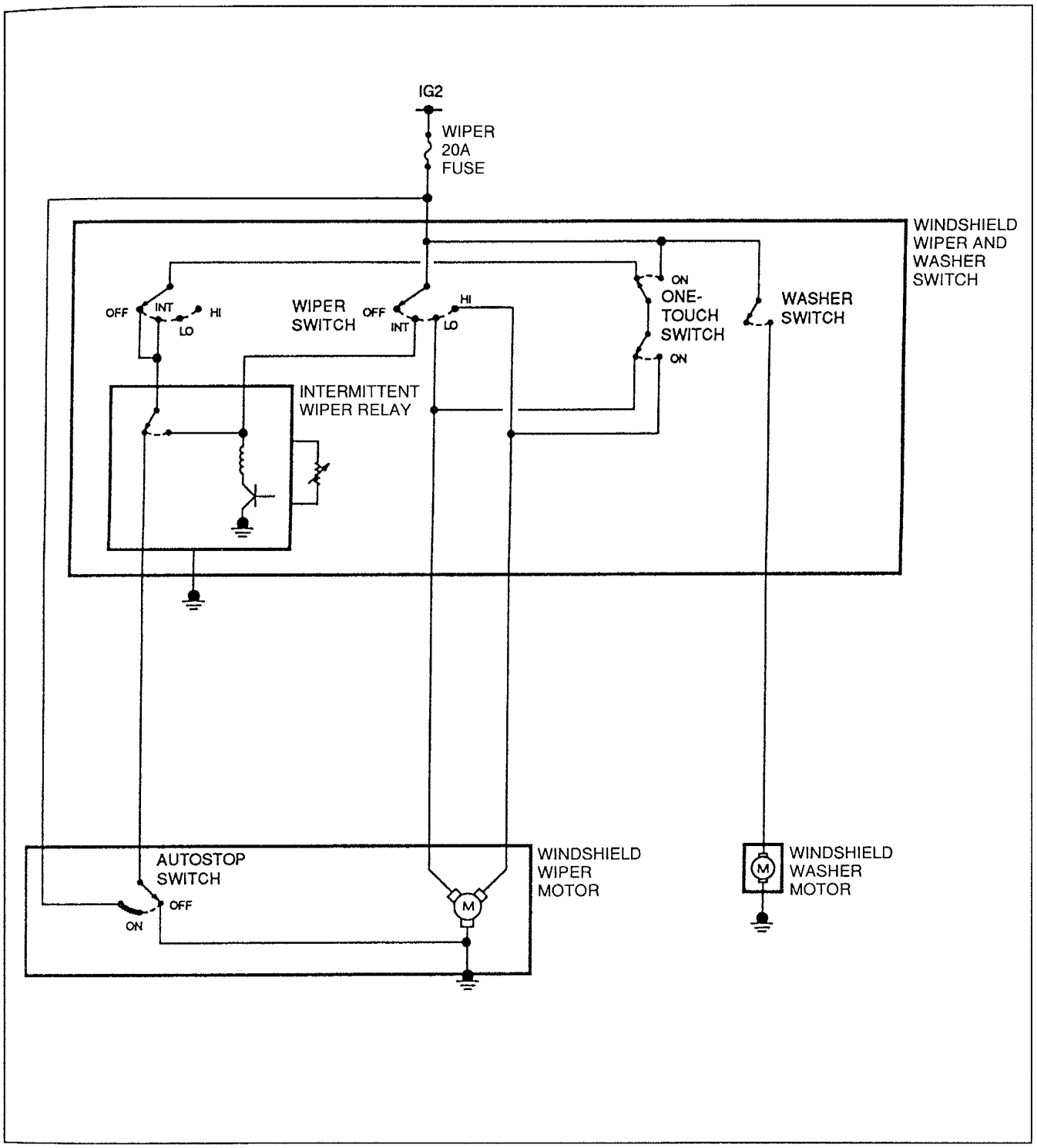

Description

The windshield wiper and washer system consists of the windshield wiper and washer switch, windshield wiper motor, and windshield washer motor.

System Operation

1. Low speed and high speed

- When the windshield wiper switch is moved to LO, current flows through the windshield wiper switch, to the windshield wiper motor, and then to ground. The wipers operate at low speed.
- When the windshield wiper switch is moved to HI, current flows through the windshield wiper switch, to the windshield wiper motor, and then to ground. The wipers operate at high speed.

2. Autostop

While the windshield wiper motor is operating, the autostop switch is on. If the wiper switch is moved to OFF, current continues to flow through the autostop switch, to the intermittent wiper relay, to the one-touch switch, to the windshield wiper motor, and then to ground. Thus, the wipers keep moving until they reach the park position. When the wipers reach the park position, the autostop switch turns off and the wipers stop.

3. One-touch wiper

- When the windshield wiper and washer switch is pushed, the one-touch switch turns on and current flows through the one-touch switch, to the windshield wiper motor, and then to ground. The wipers operate at high speed for one cycle.
- When the windshield wiper and washer switch is pushed and held, the wipers cycle at high speed. When the switch is released, the autostop function is activated and the wipers stop at the park position.

4. Intermittent wiper

- When the wiper switch is moved to INT, the intermittent wiper relay is activated, and current flows through the wiper switch, to the intermittent wiper relay, to the one-touch switch, to the windshield wiper motor, and then to ground. The wipers operate at low speed. When the intermittent wiper relay internal circuit turns off the relay, the autostop function is activated, and the wipers stop at the park position.
- After the wipers stop, discharge from the capacitor inside the relay turns the intermittent wiper relay on again, and current flows to operate the wipers again.

5. Washer

- When the windshield wiper and washer switch is pulled, the washer switch is turned on. Current flows through the washer switch, to the windshield washer motor, and then to ground. The windshield washer motor is activated.
- Current also flows to the intermittent wiper relay, turning it on, and continues through the one-touch switch, to the windshield wiper motor, and then to ground. The wipers operate at low speed.
- When the washer switch is ON for more than 1.5 sec., power is stored in the condenser inside of the intermittent wiper relay and so the windshield wiper motor continues to operate for 2.6 sec. after the switch is turned OFF. Then the windshield wiper motor returns to the park position due to the autostop function.

TROUBLESHOOTING
Circuit Diagram

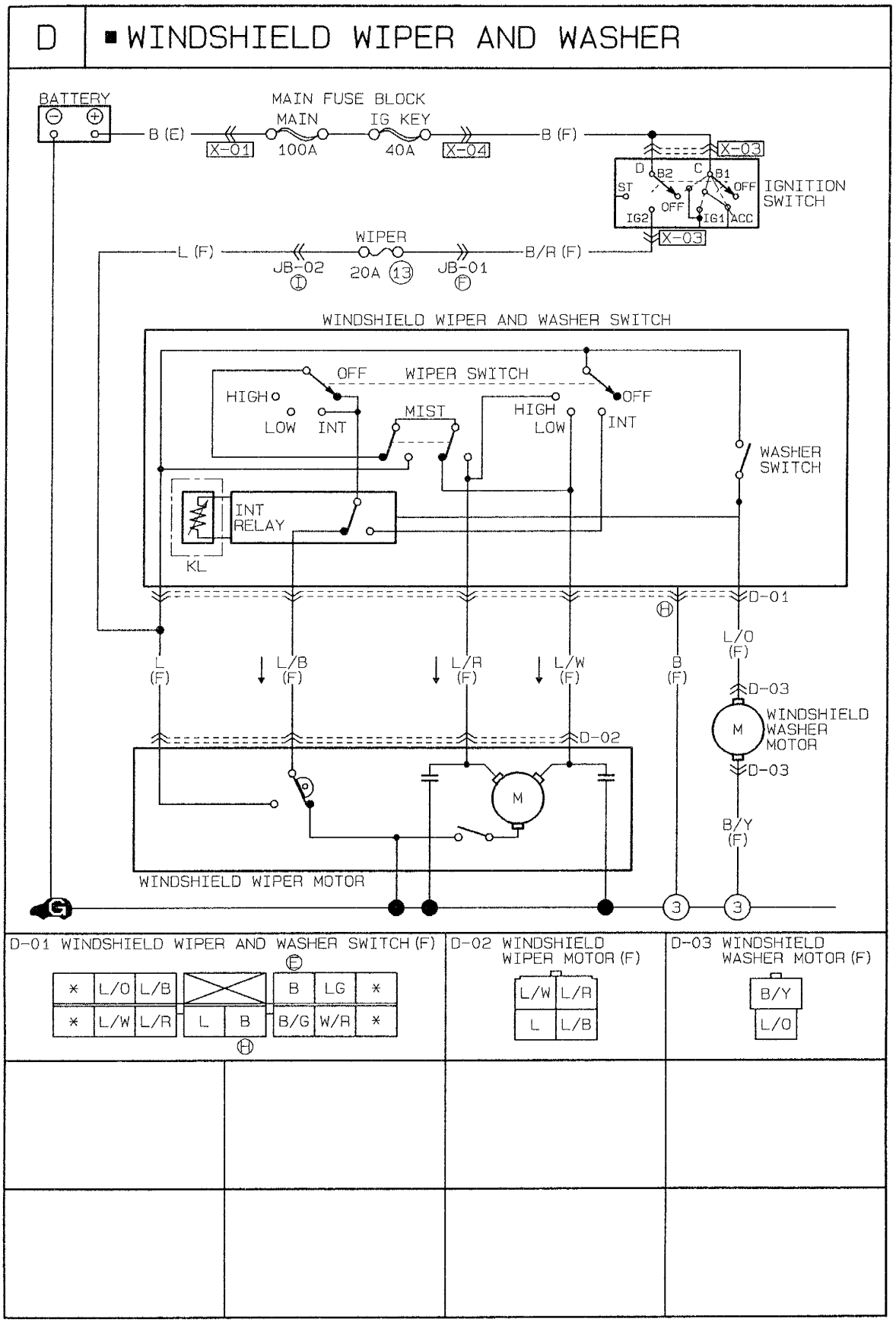

D

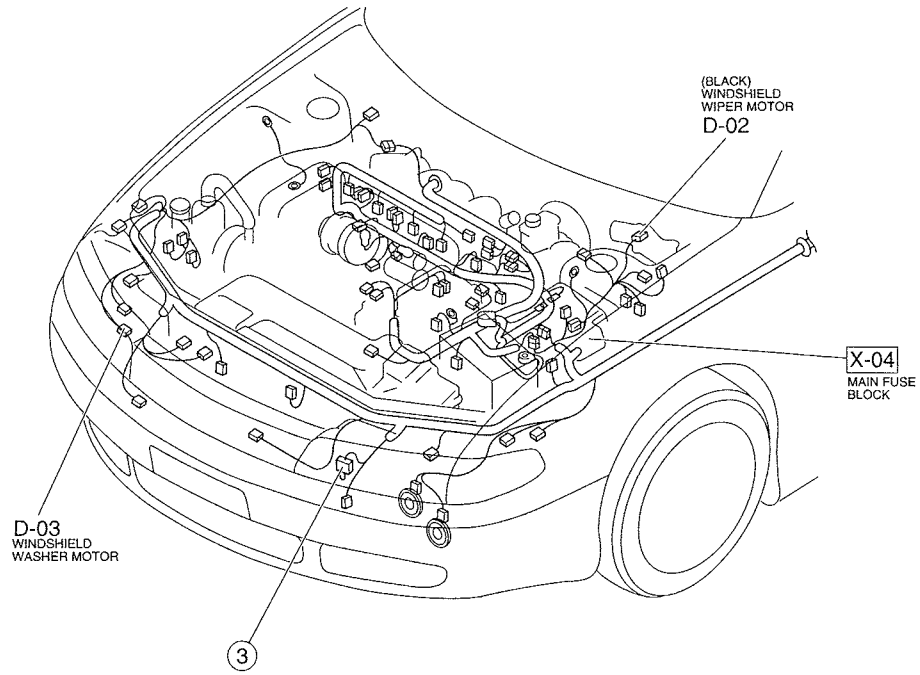
(BLACK)
WINDSHIELD
WIPER MOTOR
D-02
X-04
MAIN FUSE
BLOCK
D-03
WINDSHIELD
WASHER MOTOR
3

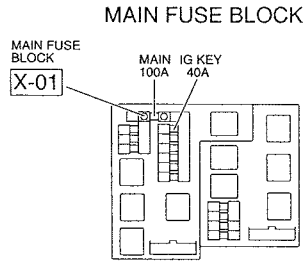
MAIN FUSE BLOCK
MAIN FUSE
BLOCK
X-01
MAIN
100A
IG KEY
40A

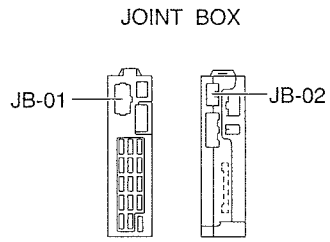
JOINT BOX
JB-01
JB-02

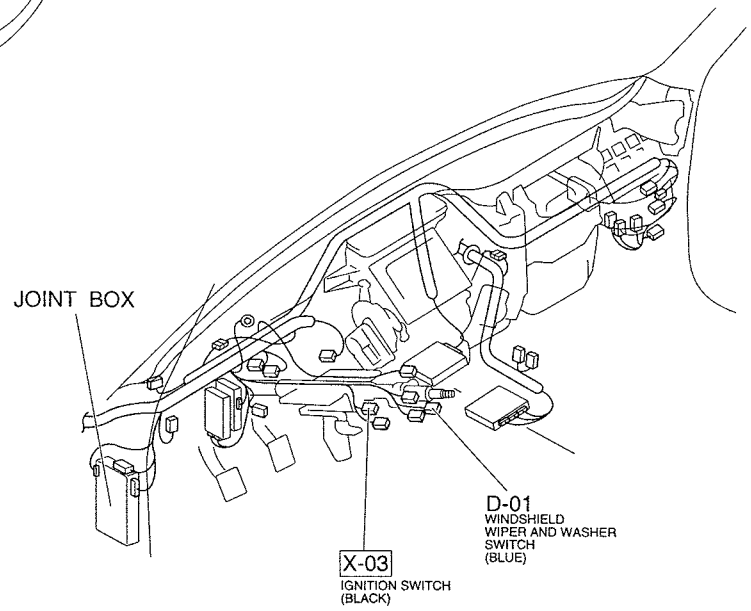
JOINT BOX
D-01
WINDSHIELD
WIPER AND WASHER
SWITCH
(BLUE)
X-03
IGNITION SWITCH
(BLACK)

Checklist

	Procedure / Proper operation	Symptom	Flowchart No.
1	Operate windshield wiper and washer switch and verify that wipers operate at low and high speeds.	Wipers do not operate	1
		Only low or high speed wiper operation is possible	2
		Wipers continue operation after windshield wiper and washer switch is turned to OFF	3
2	Set windshield wiper and washer switch to INT and verify that wipers work intermittently. Verify that intermittent operation can be adjusted.	Intermittent wiper operation is not possible (low/high operation is possible)	4
		Interval adjustment of intermittent wiper operation is not possible	5
		Wipers continue intermittent operation	6
3	Push windshield wiper and washer switch and verify that wipers operate at high speed.	One-touch wiper operation is not possible	7
4	Move windshield wiper and washer switch to OFF during wiper operation and verify that wipers stop at park position.	Autostop operation does not work (wipers immediately stop when windshield wiper and washer switch is turned to OFF)	8
5	Pull wiper lever and verify that washer fluid is sprayed.	Washer does not operate (wipers operate)	9
		Washer operates with windshield washer switch turned OFF	10

Flowchart No.1	Symptom	Wipers do not operate

Possible cause

- Burnt WIPER 20A fuse
- Damaged windshield wiper motor
- Damaged windshield wiper and washer switch
- Open or short circuit in wiring harness
- Poor connection of connector

Note

- The wiper motor circuit has a built-in circuit breaker to prevent damage to the unit. If the wipers do not operate, turn the windshield wiper switch off. After approximately 5 minutes, turn the windshield wiper switch on to verify wiper operation. If the wipers operate, the windshield wiper motor is functioning correctly (circuit breaker opened momentarily).

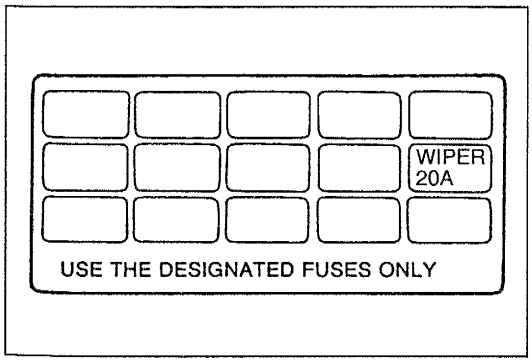

Step 1

Check the WIPER 20A fuse in the fuse block.

Fuse	Action
OK	Go to Step 2
Burnt	Replace fuse after checking and repairing wiring harness

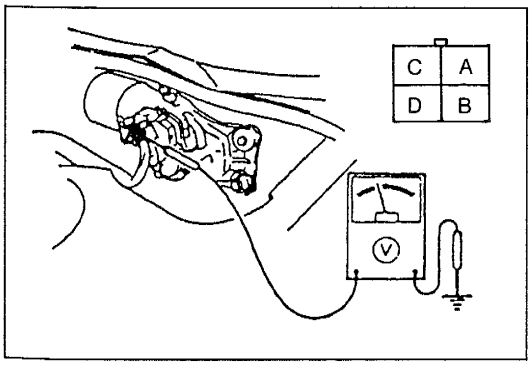

Step 2

1. Turn the ignition switch to ON.
2. Measure the voltage at terminals of the windshield wiper motor connector with the wiper switch in the following positions.

B+: Battery positive voltage

Switch position	Terminal	Voltage
LO	C	B+
HI	A	B+

3. If correct, inspect the windshield wiper motor. (Refer to page D–12.)
4. If not as specified, go to Step 3.

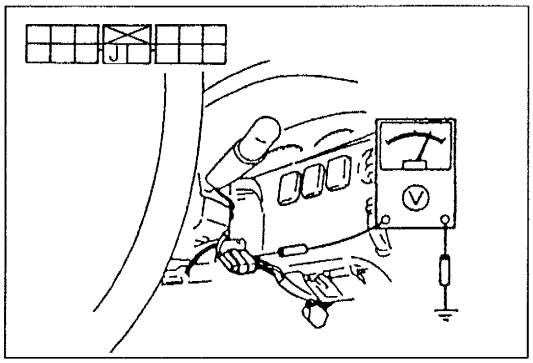

Step 3

1. Remove the column cover.
   (Refer to the 1996 626/MX-6 Workshop Manual, section S.)
2. Measure the voltage at terminal J (L) of the windshield wiper and washer switch connector.

B+: Battery positive voltage

Voltage	Action
B+	Go to Step 4
Other	Repair wiring harness (WIPER 20A fuse—Windshield wiper and washer switch)

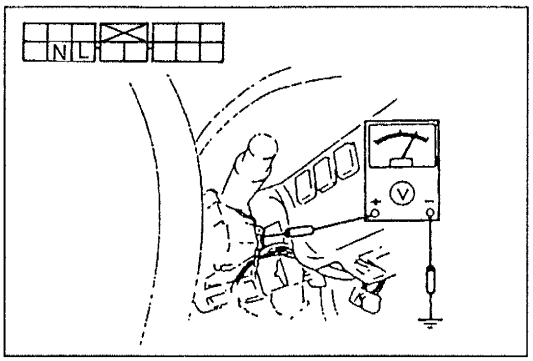

Step 4

1. Measure the voltage at the terminals of the windshield wiper and washer switch connector with the wiper switch in the following positions.

B+: Battery positive voltage

Switch position	Terminal	Voltage
LO	N	B+
HI	L	B+

2. If correct, go to Step 5.
3. If not as specified, inspect the windshield wiper and washer switch.
   (Refer to page D–12.)

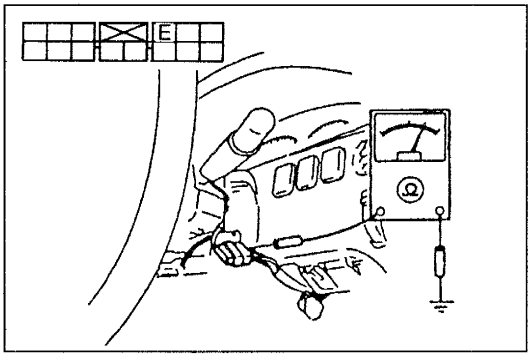

Step 5

1. Turn the ignition switch to LOCK.
2. Disconnect the windshield wiper and washer switch connector.
3. Check for continuity between terminal E (B) of the windshield wiper and washer switch connector and ground.

Continuity	Action
Yes	Repair wiring harness (Windshield wiper and washer switch—Windshield wiper motor)
No	Repair wiring harness (Windshield wiper and washer switch—GND)

Flowchart No.2	Symptom	Only low or high speed wiper operation is possible

Possible cause

- Damaged windshield wiper motor
- Damaged windshield wiper and washer switch
- Open or short circuit in wiring harness
- Poor connection of connector

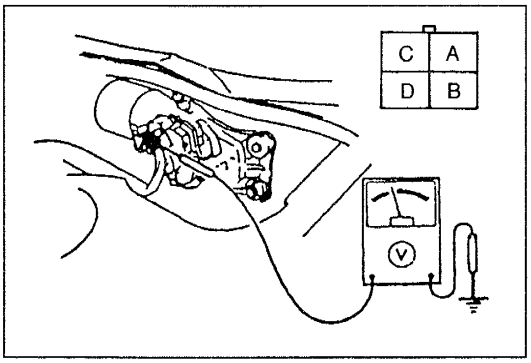

Step 1

1. Turn the ignition switch to ON.
2. Measure the voltage at the terminals of the windshield wiper motor connector with the wiper switch in the following positions.

B+: Battery positive voltage

Switch position	Terminal	Voltage
LO	C	B+
HI	A	B+

3. If correct, inspect the windshield wiper motor.
   (Refer to page D–12.)
4. If not as specified, go to Step 2.

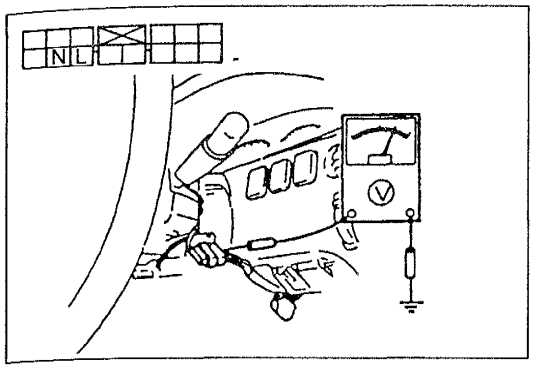

Step 2

1. Remove the column cover.
   (Refer to the 1996 626/MX-6 Workshop Manual, section S.)
2. Measure the voltage at the terminals of the windshield wiper and washer switch connector with the wiper switch in the following positions.

B+: Battery positive voltage

Switch position	Terminal	Voltage
LO	N	B+
HI	L	B+

3. If correct, repair the wiring harness
   (windshield wiper and washer switch—windshield wiper motor).
4. If not as specified, inspect the windshield wiper and washer switch.
   (Refer to page D–12.)

Flowchart No.3	Symptom	Wipers continue operation after windshield wiper and washer switch is turned to OFF

Possible cause
- Damaged windshield wiper and washer switch

Remedy
Inspect the windshield wiper and washer switch.
(Refer to page D–12.)

Flowchart No.4	Symptom	Intermittent wiper operation is not possible (low/high operation is possible)

Possible cause
- Damaged windshield wiper and washer switch

Remedy
Inspect the windshield wiper and washer switch.
(Refer to page D–12.)

Flowchart No.5	Symptom	Interval adjustment of intermittent wiper operation is not possible

Possible cause
- Damaged intermittent wiper relay (in combination switch)

Remedy
Replace the combination switch.
(Refer to section Z4.)

Flowchart No.6	Symptom	Wipers continue intermittent operation

Possible cause
- Damaged windshield wiper and washer switch
- Damaged intermittent wiper relay (in combination switch)

Remedy
Inspect the windshield wiper and washer switch.
(Refer to page D–12.)

Flowchart No.7	Symptom	One-touch wiper operation is not possible

Possible cause
- Damaged windshield wiper and washer switch

Remedy
Inspect the windshield wiper and washer switch.
(Refer to page D–12.)

Flowchart No.8	Symptom	Autostop operation does not work (wipers immediately stop when windshield wiper and washer switch is turned to OFF)

Possible cause
- Damaged windshield wiper motor
- Damaged windshield wiper and washer switch
- Open or short circuit in wiring harness
- Poor connection of connector

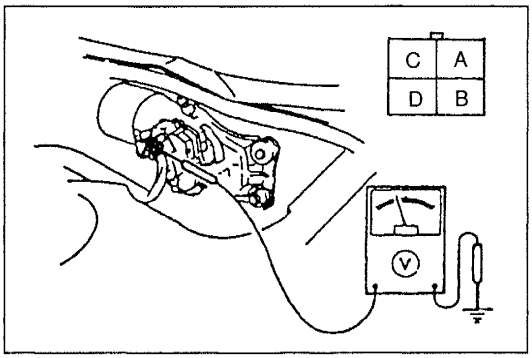

Step 1
1. Turn the ignition switch to ON.
2. Measure the voltage at terminal D (L) of the windshield wiper motor connector.

B+: Battery positive voltage

Voltage	Action
B+	Go to Step 2
Other	Repair wiring harness (WIPER 20A fuse—Windshield wiper motor)

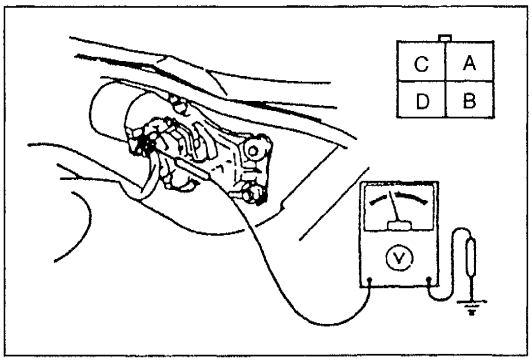

Step 2
Measure the voltage at terminal B (L/B) of the windshield wiper motor connector with the wiper switch at the low position.

B+: Battery positive voltage

Voltage	Action
B+	Turn windshield wiper and washer switch to OFF and go to Step 3
Other	Inspect windshield wiper motor (Refer to page D–12)

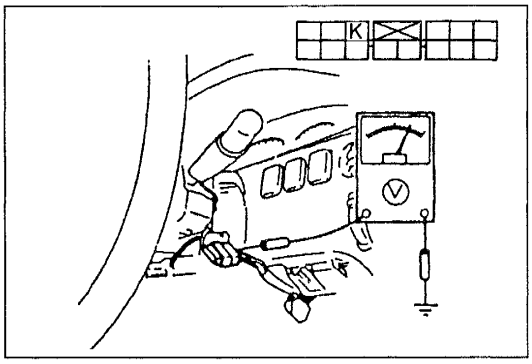

Step 3
1. Remove the column cover.
(Refer to the 1996 626/MX-6 Workshop Manual, section S.)
2. Measure the voltage at terminal K (L/B) of the windshield wiper and washer switch connector with the wiper switch at the low position.

B+: Battery positive voltage

Voltage	Action
B+	Inspect windshield wiper and washer switch (Refer to page D–12)
Other	Repair wiring harness (Windshield wiper motor—Windshield wiper and washer switch)

Flowchart No.9	Symptom	Washer does not operate (wipers operate)

Possible cause
- Damaged windshield wiper and washer switch
- Damaged windshield washer motor
- Open or short circuit in wiring harness
- Poor connection of connector

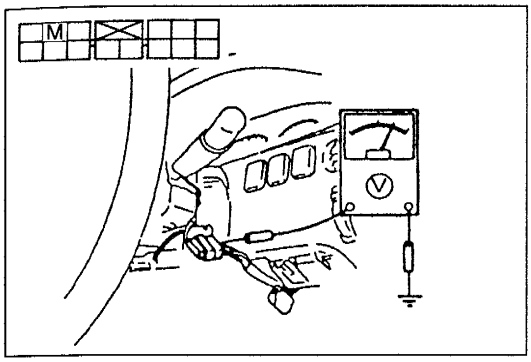

Step 1
1. Remove the column cover.
   (Refer to the 1996 626/MX-6 Workshop Manual, section S.)
2. Turn the ignition switch to ON.
3. Measure the voltage at terminal M (L/O) of the windshield wiper and washer switch connector while operating the washer.

B+: Battery positive voltage

Voltage	Action
B+	Go to Step 2
Other	Inspect windshield wiper and washer switch (Refer to page D–12)

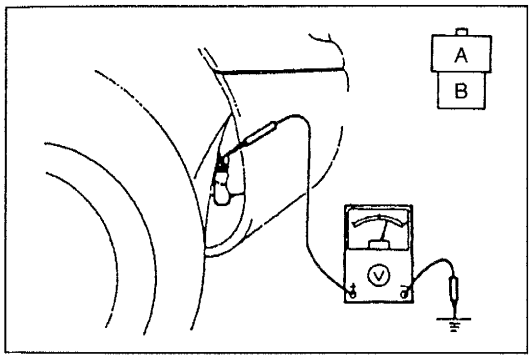

Step 2
1. Remove the mud guard.
   (Refer to the 1996 626/MX-6 Workshop Manual, section S.)
2. Measure the voltage at terminal B (L/O) of the windshield washer motor connector while operating the washer.

B+: Battery positive voltage

Voltage	Action
B+	Go to Step 3
Other	Repair wiring harness (Windshield wiper and washer switch—Windshield washer motor)

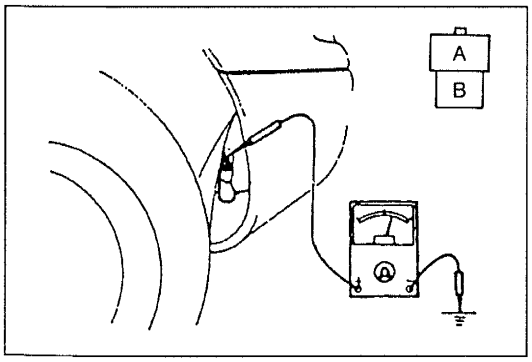

Step 3
1. Turn the ignition switch to OFF.
2. Disconnect the windshield washer motor connector.
3. Check for continuity between A (B/Y) of the windshield washer motor connector and ground.

Continuity	Action
Yes	Inspect windshield washer motor (Refer to page D–12)
No	Repair wiring harness (Windshield washer motor—GND)

Flowchart No.10	Symptom	Washer operates with windshield washer switch turned OFF

Possible cause
- Damaged windshield wiper and washer switch

Remedy
Inspect the windshield wiper and washer switch.
(Refer to page D–12.)

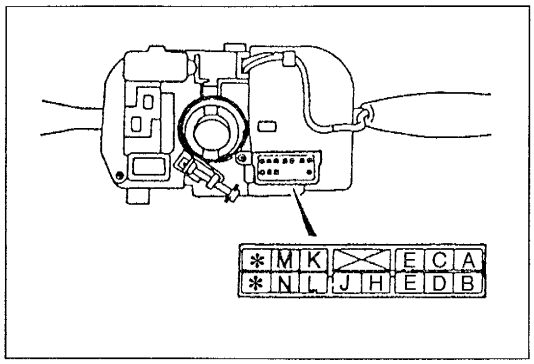

WINDSHIELD WIPER AND WASHER SWITCH

Inspection

1. Remove the column cover.
   (Refer to the 1996 626/MX-6 Workshop Manual, section S.)
2. Disconnect the windshield wiper and washer switch connector.
3. Check for continuity between the terminals of the windshield wiper and washer switch.

○–○ : Continuity

Switch position \ Terminal			J	K	L	M	N
Windshield wiper switch	OFF	One-touch OFF		○			○
		One-touch ON	○		○		
	INT			○			○
	LO		○				○
	HI		○		○		
Windshield washer switch ON			○			○	

4. If not as specified, replace the combination switch.
   (Refer to section Z4.)

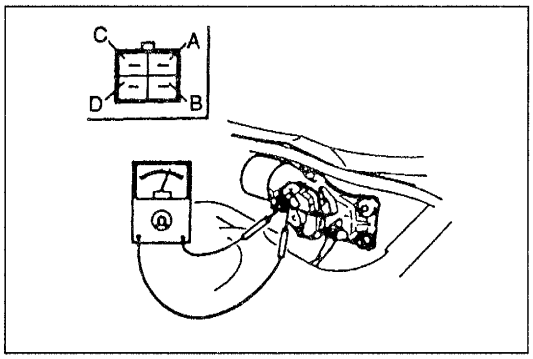

WINDSHIELD WIPER MOTOR

Inspection

1. Disconnect the windshield wiper motor connector.
2. Check for continuity between the motor terminals as indicated below.

○–○ : Continuity

Wiper position \ Terminal	A	B	C	D
Parked	○	○	○	
Not parked	○		○	
		○		○

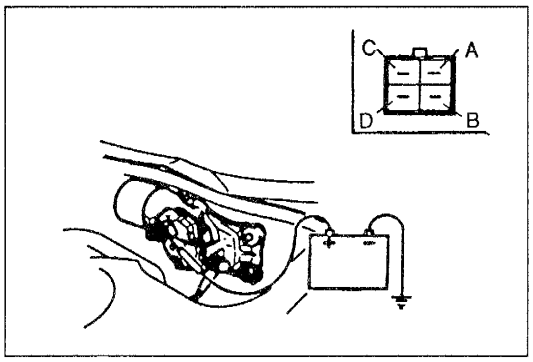

3. Connect battery positive voltage to the terminals of the windshield wiper motor connector and ground to a bare metal part of the vehicle. Verify that the windshield wiper motor operates as indicated below.

Terminal	Operation
C	Low
A	High

4. If not as specified, replace the windshield wiper motor.
   (Refer to page D–13.)

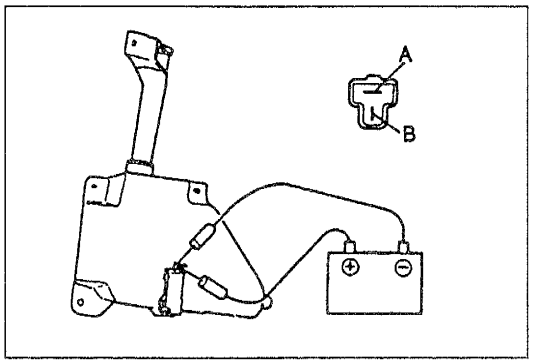

WINDSHIELD WASHER MOTOR

Inspection

1. Remove the mud guard.
   (Refer to the 1996 626/MX-6 Workshop Manual, section S.)
2. Disconnect the windshield washer motor connector.
3. Connect battery positive voltage to terminal B and ground to terminal A of the motor.
4. Verify that the windshield washer motor operates.
5. If the motor does not operate, replace it.

COMPONENTS

Removal / Installation

1. Remove in the order shown in the figure.
2. Install in the reverse order of removal.

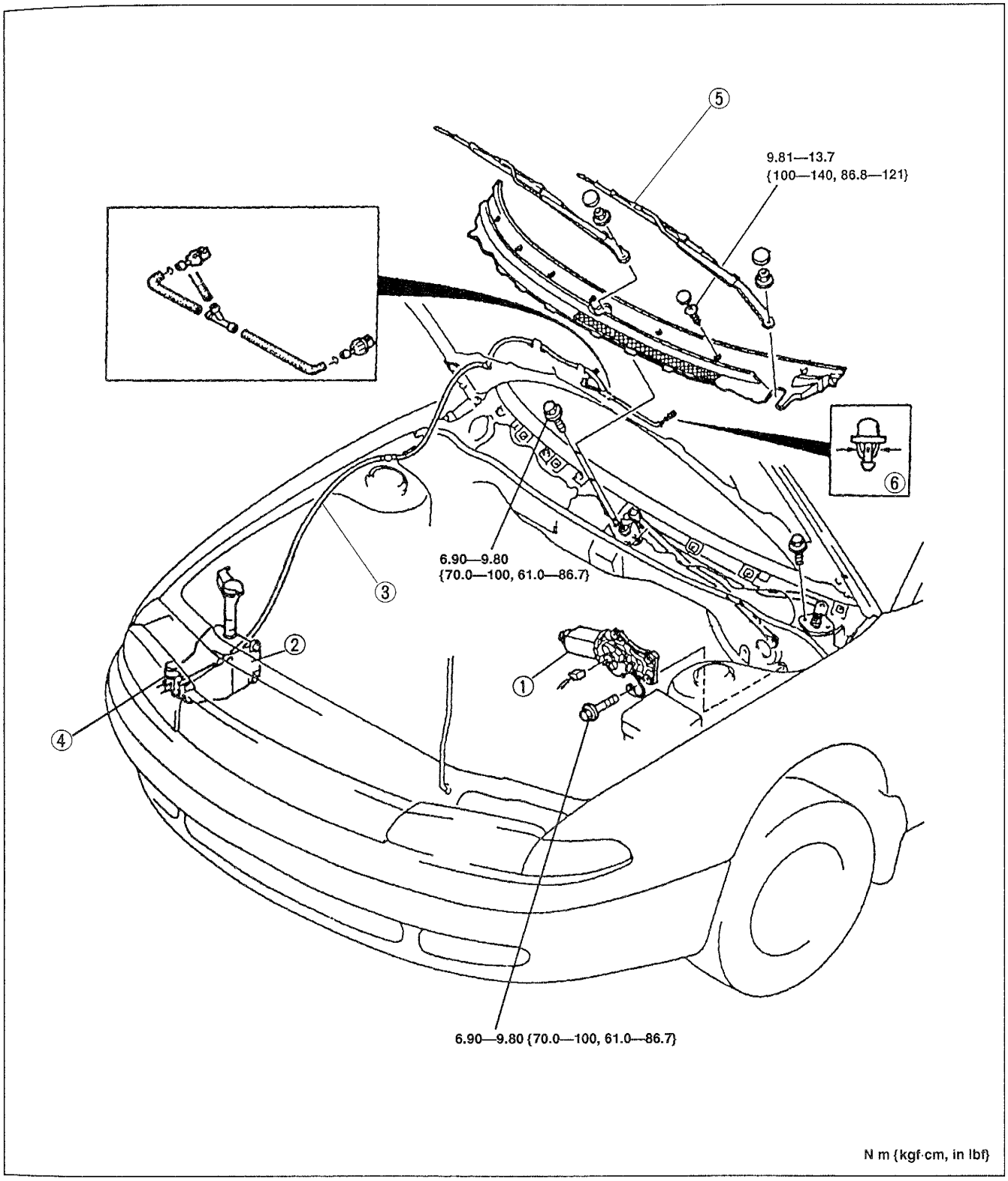

1. Windshield wiper motor
   Inspection ..... page D–12
2. Windshield washer tank
3. Windshield washer pipe
4. Windshield washer motor
   Inspection ..... page D–12
5. Windshield wiper arm and wiper blade
6. Windshield washer nozzle

Before beginning any service procedure, refer to section S of this manual for air bag system service warnings.

EXTERIOR LIGHTING SYSTEM

EXTERIOR LIGHTING SYSTEM

STRUCTURAL VIEW
Front View

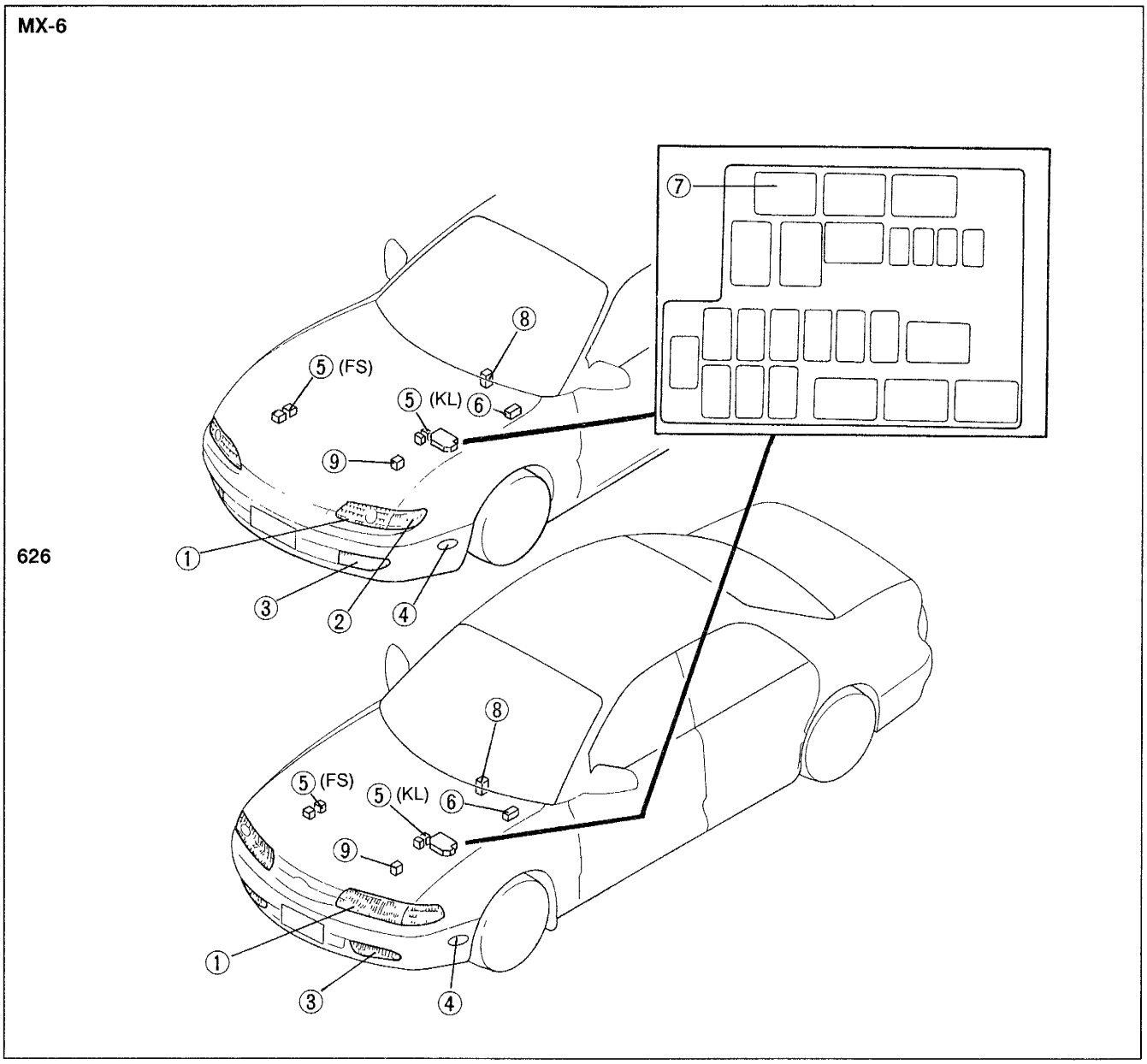

1. Headlight
   Troubleshooting
   (626) **60W (9005), 51W (9006)**... page E– 7
   (MX-6) **65/45W (9004)**..... page E–11
   Removal / Installation
   (626) ..... page E–47
   (MX-6)..... page E–48
   Aiming..... page E–45
2. Front combination light
   Removal / Installation
   (MX-6)..... page E–48
3. Front fog light **35W**
   Troubleshooting..... page E–26
   Removal / Installation ..... page E–49
4. Front side marker light **3.8W (194)**
   Troubleshooting..... page E–35
   Removal / Installation ..... page E–53
5. Headlight relay
   Inspection..... section Z2
6. TNS relay
   Inspection..... section Z2
7. DRL relay [Canada]
   Inspection..... section Z2
8. DRL control module [Canada]
   Troubleshooting..... page E–24
9. DRL resistor [Canada]
   Removal / Installation ..... page E–53
   Inspection ..... page E–53

Rear View

MX-6

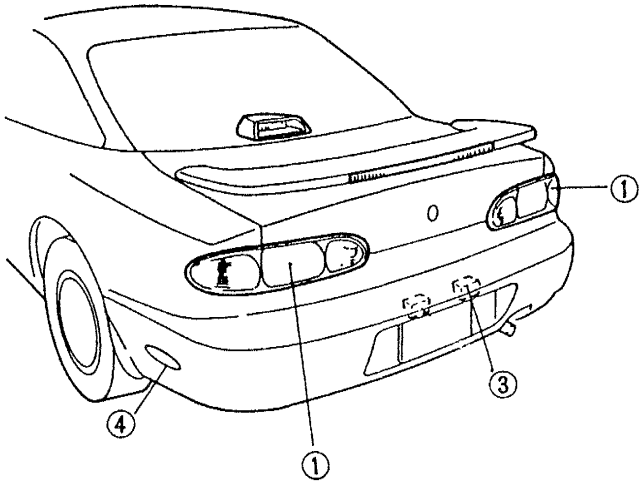

626

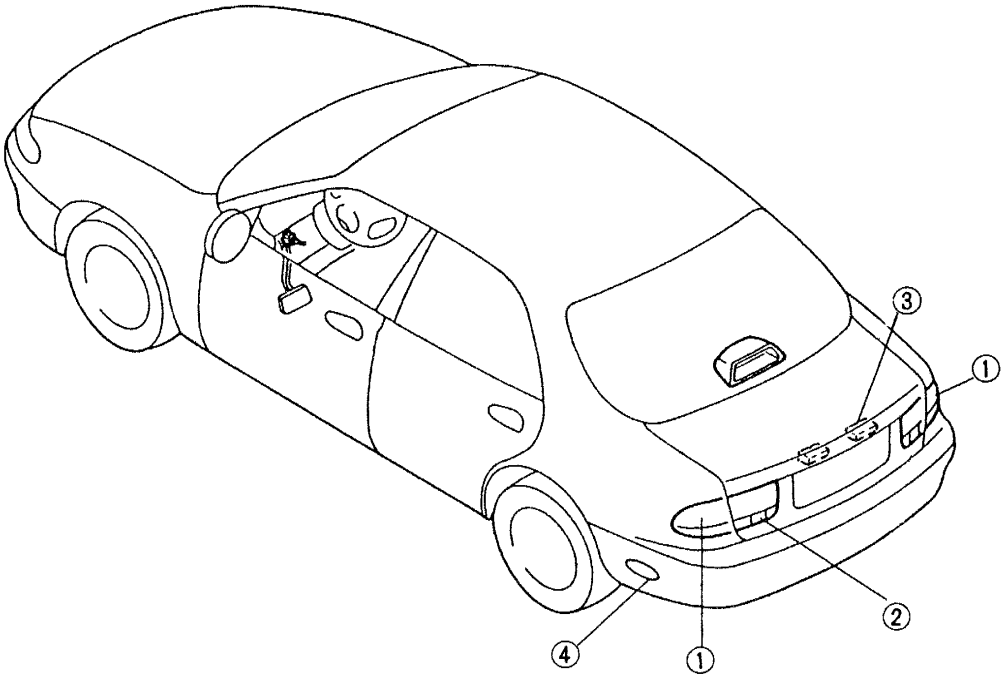

1. Rear combination light
   - Removal / Installation ..... page E–50
   - Disassembly ..... page E–51
   - Assembly ..... page E–51
   - Taillight **27/8W (1157)**
     - Troubleshooting ..... page E–37
2. Inboard combination light
   - Removal / Installation ..... page E–52
   - Taillight **27/8W (1157)**
     - Troubleshooting ..... page E–35
3. Licence plate light (MX-6) **4.9 W (168)** (626) **5W**
   - Removal / Installation
     - (626) ..... page E–52
     - (MX-6) ..... page E–53
   - Troubleshooting ..... page E–35
4. Rear side marker light **3.8W (194)**
   - Removal / Installation ..... page E–53
   - Troubleshooting ..... page E–35

SPECIFICATIONS

626

Item	Bulb	Wattage (W)	Trade number
Headlight	High beam	60 × 2	9005
	Low beam	51 × 2	9006
Front turn and hazard warning light/parking light		27/8 × 2	1157 NA
Front side marker light		3.8 × 2	194
Front fog light		35 × 2	—
Rear combination light	Brake light/taillight	27/8 × 2	1157
	Rear turn light	27 × 2	1156 NA
Inboard combination light	Brake light/taillight	27/8 × 2	1157
	Back-up light	27 × 2	1156
Rear side marker light		3.8 × 2	194
Licence plate light		5 × 2	—
High-mount brake light		18.4 × 1	921

MX-6

Item	Bulb	Wattage (W)	Trade number
Headlight	High/low beam	65/45 × 2	9004
Front turn and hazard warning light/parking light		27/8 × 2	1157 NA
Front side marker light		3.8 × 2	194
Front fog light		35 × 2	—
Rear combination light	Brake light/taillight	27/8 × 4	1157
	Rear turn light	27 × 2	1156
	Back-up light	27 × 2	1156
Rear side marker light		3.8 × 2	194
Licence plate light		4.9 × 2	168
High-mount brake light	Without rear spoiler	18.4 × 1	921
	With rear spoiler	8.1 × 1	—

SYSTEM DIAGRAM
Headlights

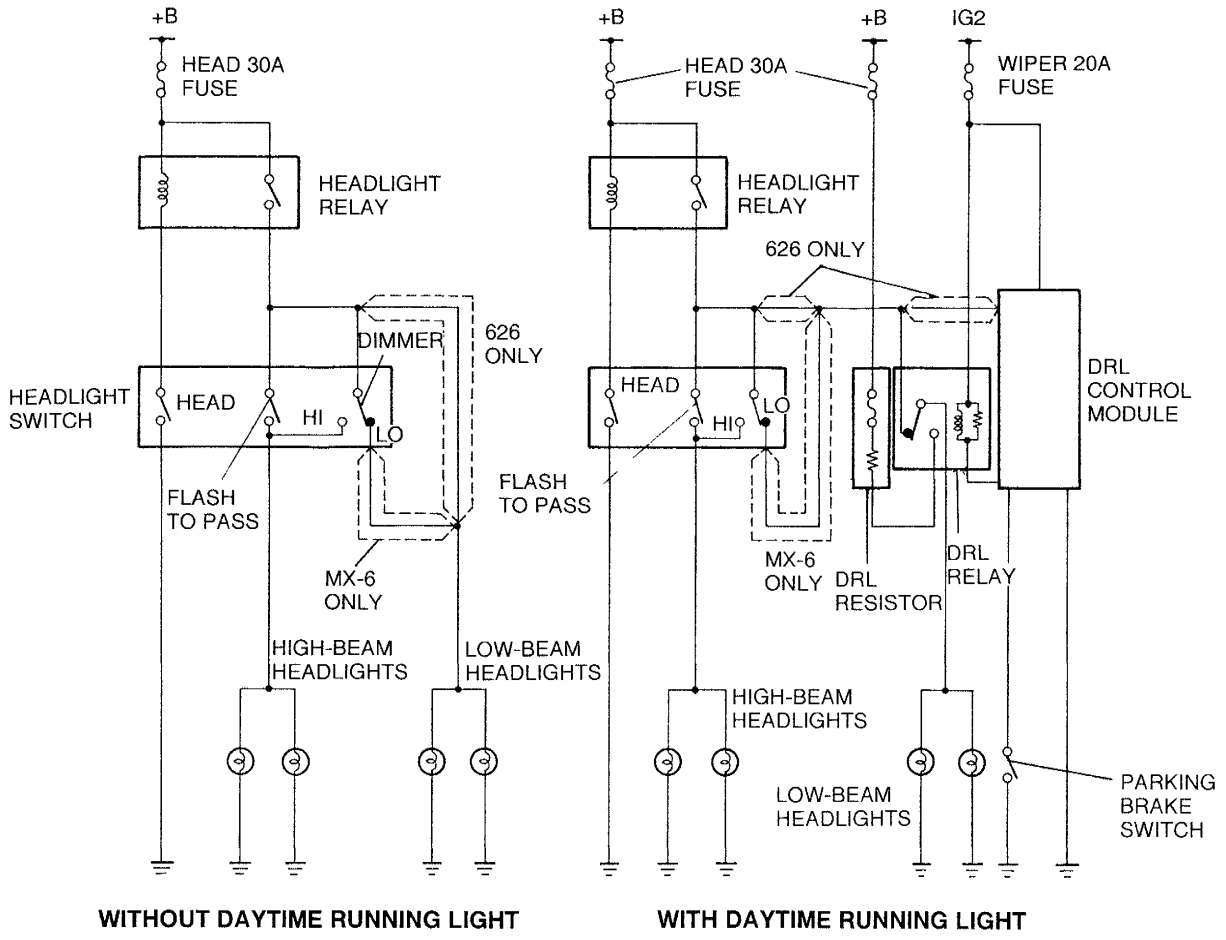

Operation
Headlights
When the headlight switch is in the second position, the headlight relay is energized and applies voltage to the dimmer switch. The dimmer switch directs the applied voltage to the high- or low-beam headlight filament.

Daytime running lights (Canada)
When the ignition is turned to ON and the parking brake is released, the daytime running lights feature is activated. The daytime running light control module turns on the low-beam headlights by energizing the DRL relay. The daytime running light control module turns off the lights when the parking brake is applied or the ignition is turned to LOCK or ACC.

Front fog lights
When the low-beam headlights are on, voltage is applied to the front fog light switch. When the fog light switch is turned on, voltage is applied to the front fog lights to illuminate the lights.

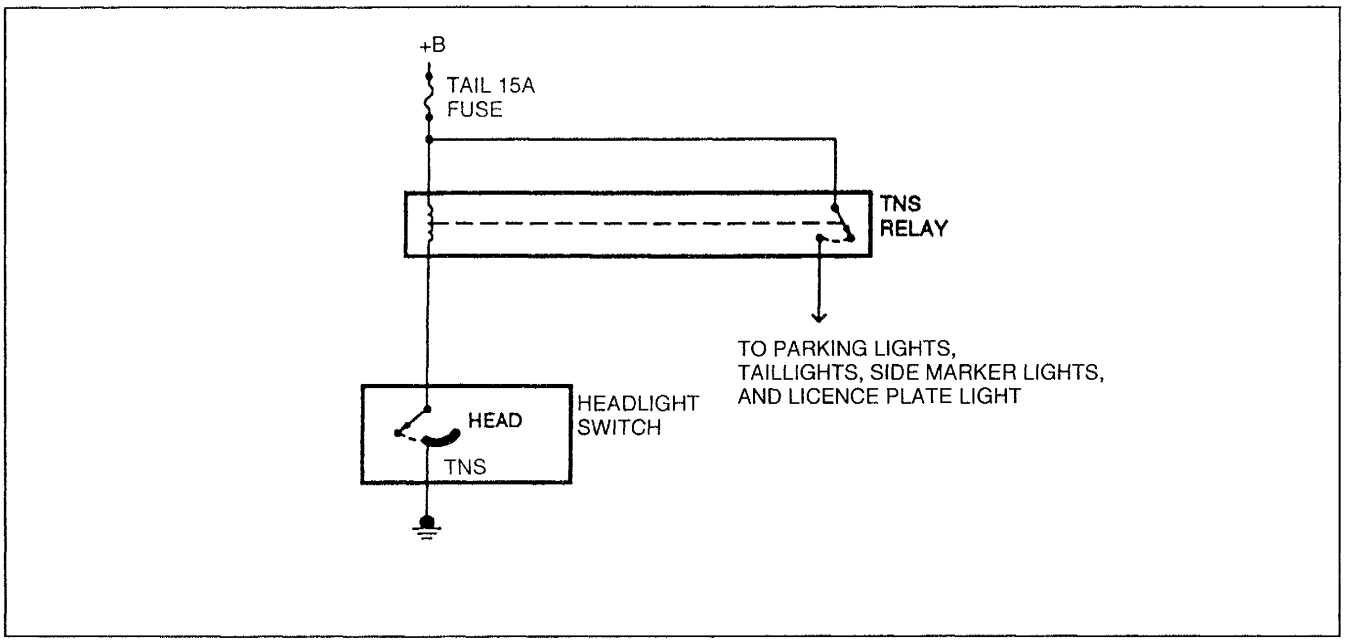

Operation

When the headlight switch is in the first or second position, the TNS relay coil is grounded through the light switch. The TNS relay now energizes, allowing voltage from the TAIL 15A fuse to be applied to the parking lights, licence plate light, side marker lights, and taillights.

TROUBLESHOOTING
Headlights (626)
Circuit diagram
Federal and California

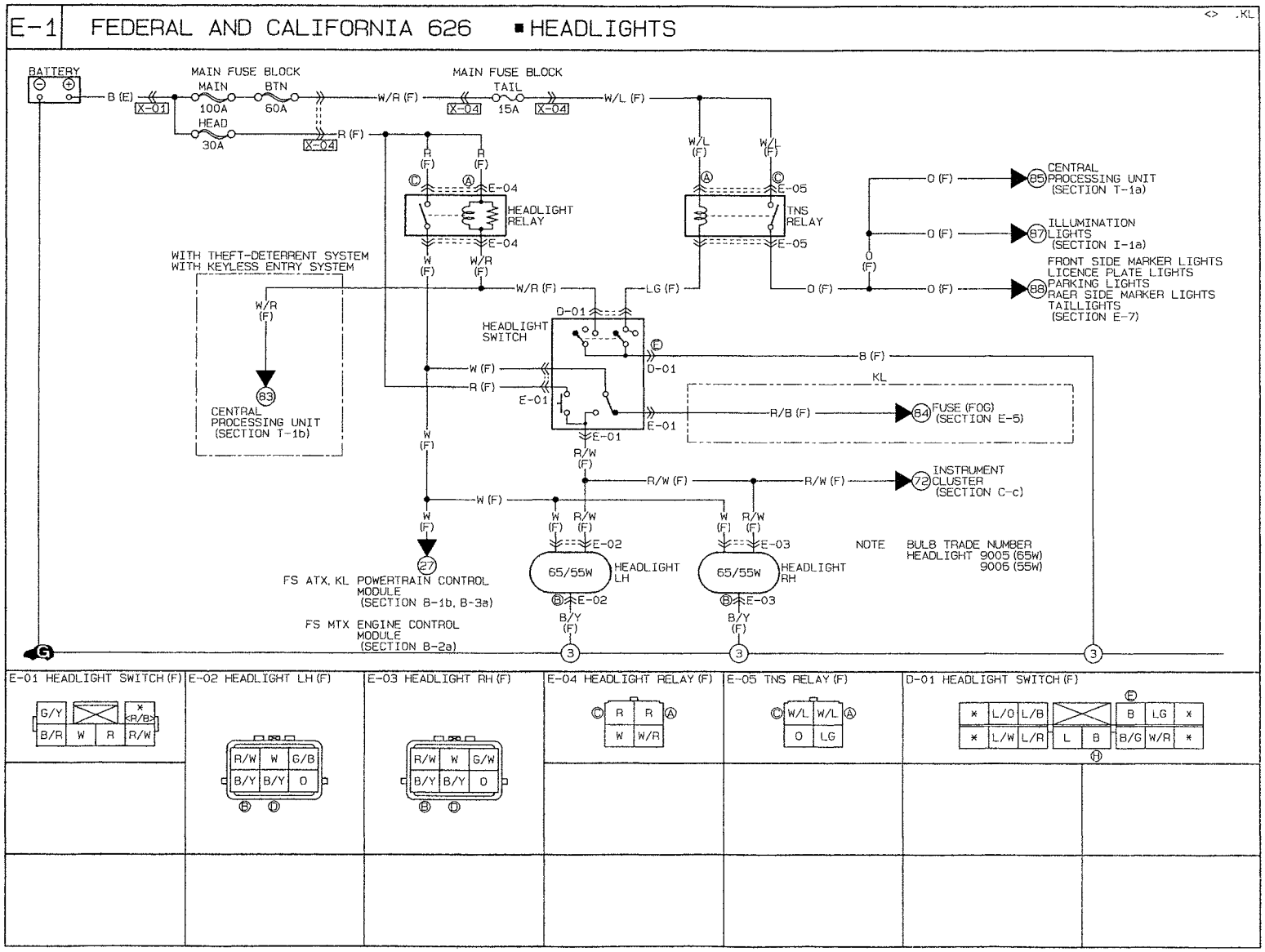

E-3 CANADA 626 ■ HEADLIGHTS

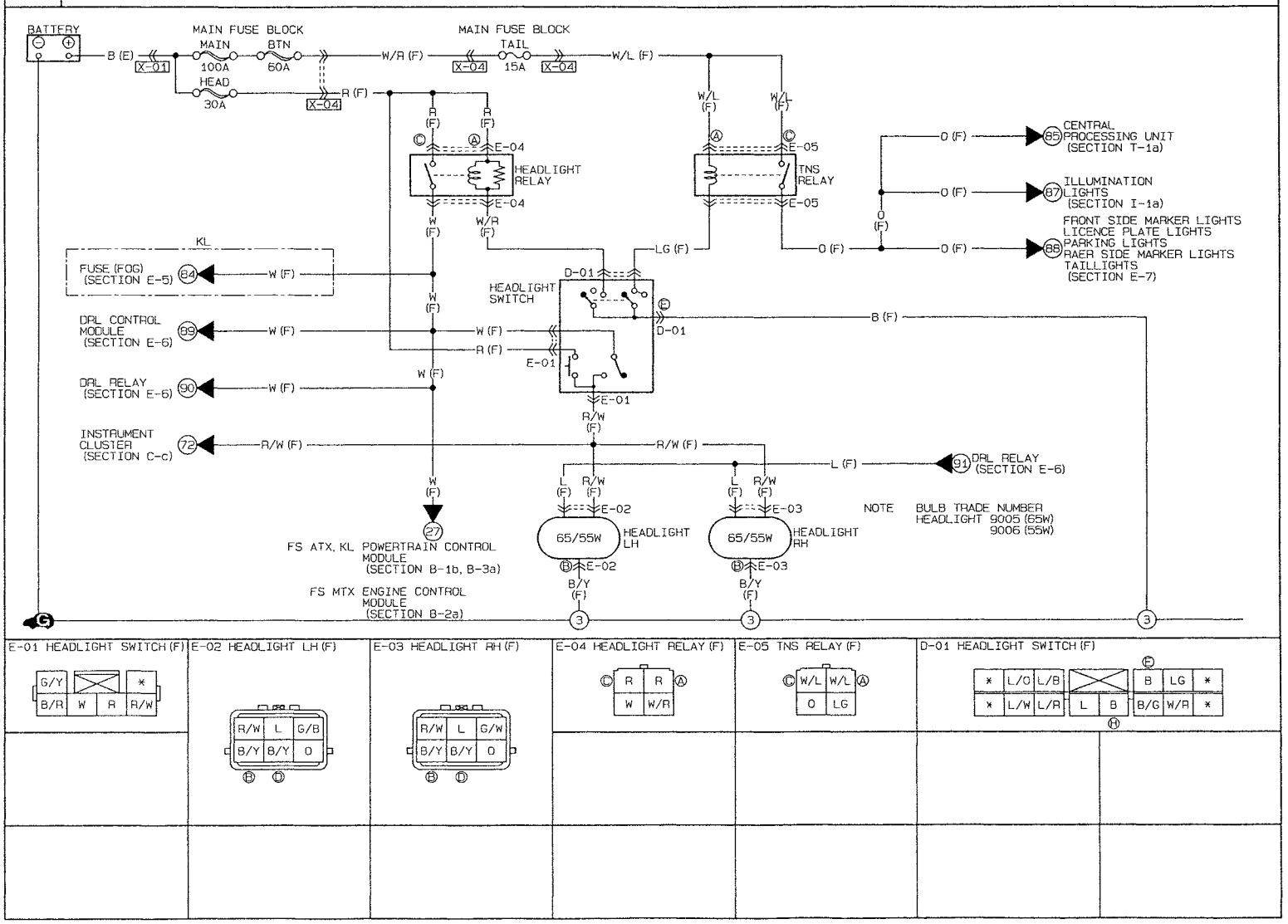

E-01 HEADLIGHT SWITCH (F)	E-02 HEADLIGHT LH (F)	E-03 HEADLIGHT RH (F)	E-04 HEADLIGHT RELAY (F)	E-05 TNS RELAY (F)	D-01 HEADLIGHT SWITCH (F)
G/Y, B/R, W, R, R/W, *	R/W, B/Y, L, B/Y, G/B, O	R/W, B/Y, L, B/Y, G/W, O	R, W, R, W/R	W/L, O, W/L, LG	*, L/O, L/B, *, L/W, L/R; L, B; B, B/G, LG, W/R, *

Connector locations
Federal and California

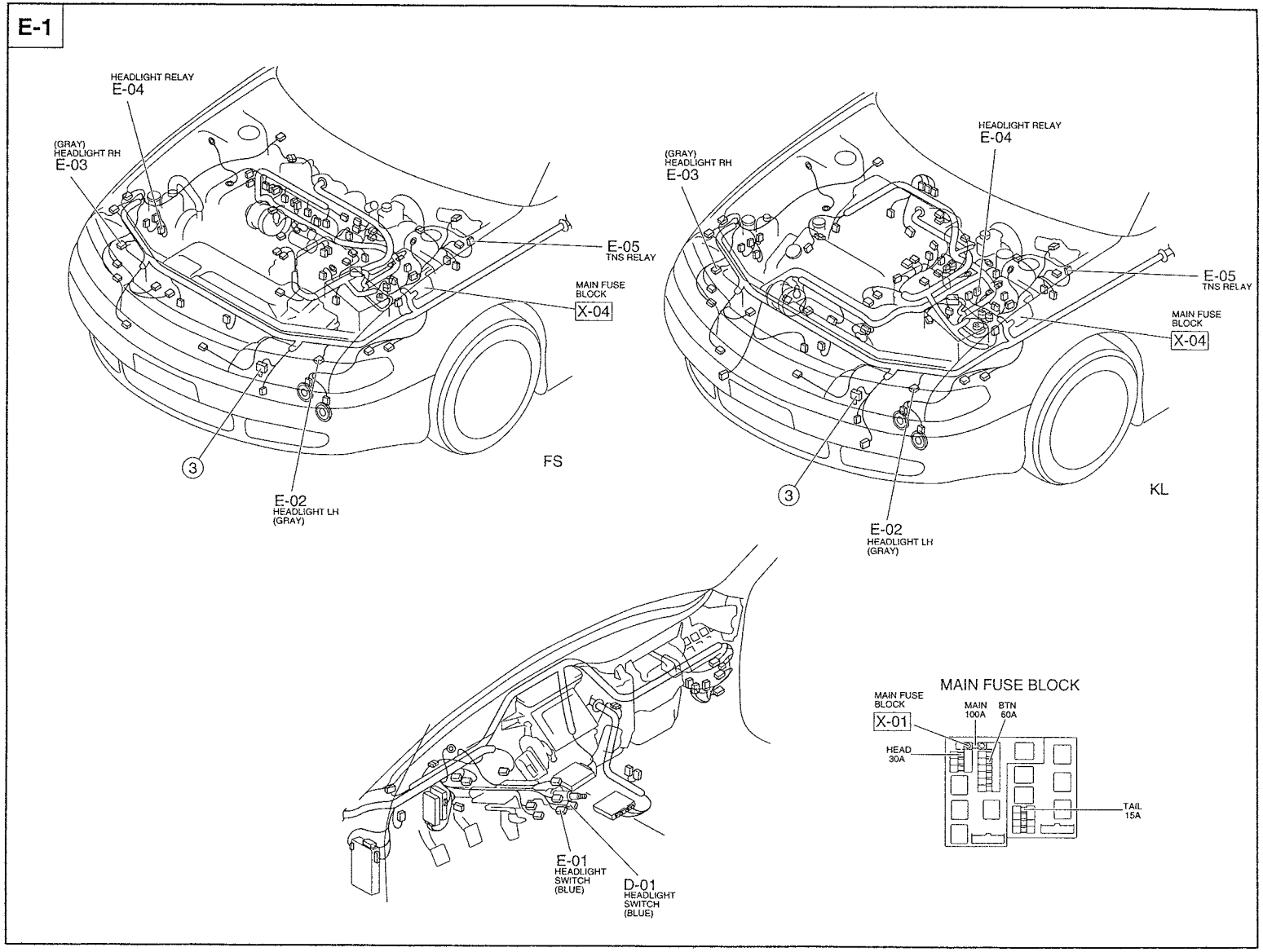

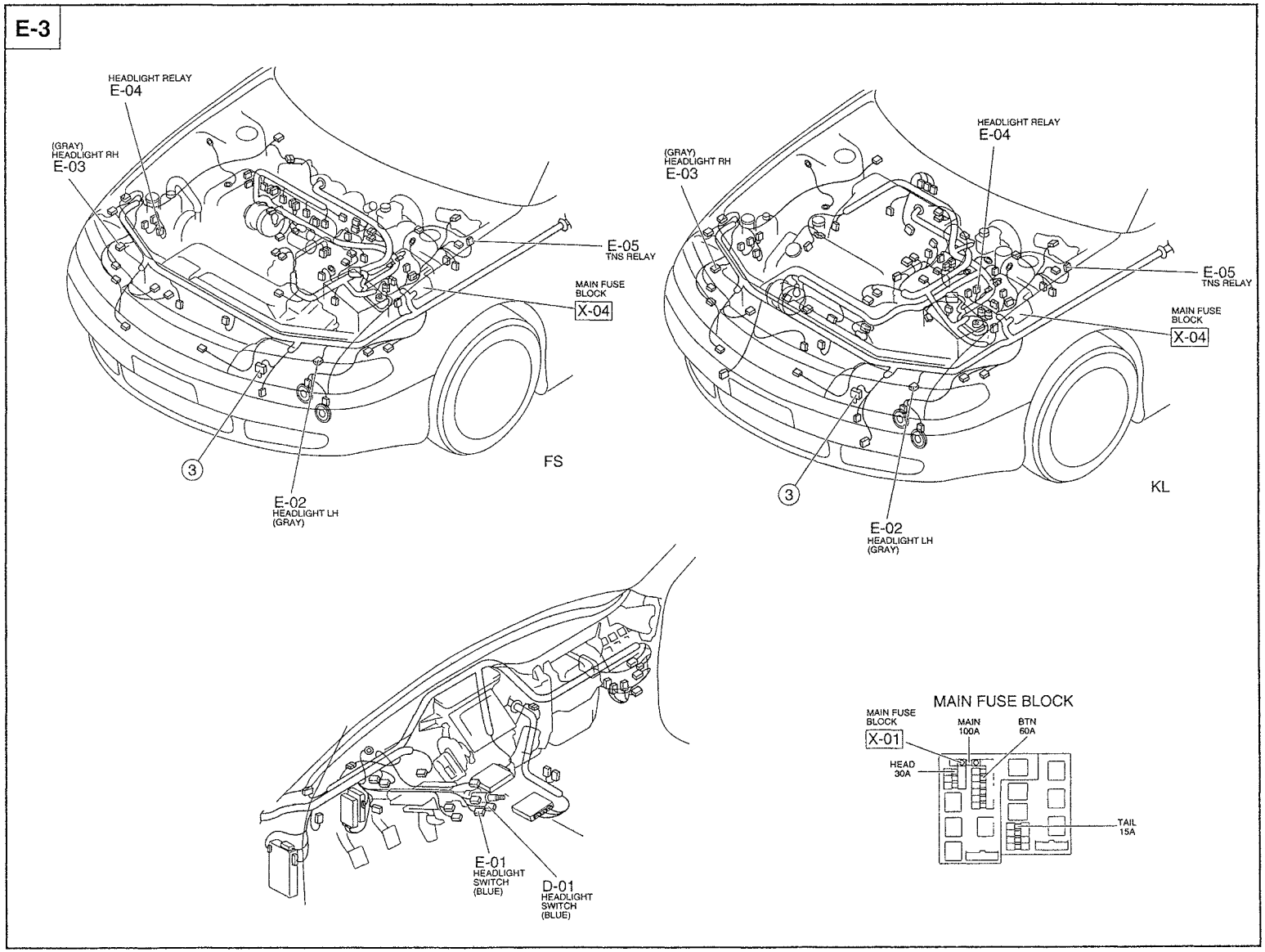
E-3
HEADLIGHT RELAY
E-04
(GRAY)
HEADLIGHT RH
E-03
E-05
TNS RELAY
MAIN FUSE
BLOCK
X-04
3
E-02
HEADLIGHT LH
(GRAY)
FS
HEADLIGHT RELAY
E-04
(GRAY)
HEADLIGHT RH
E-03
E-05
TNS RELAY
MAIN FUSE
BLOCK
X-04
3
E-02
HEADLIGHT LH
(GRAY)
KL
E-01
HEADLIGHT
SWITCH
(BLUE)
D-01
HEADLIGHT
SWITCH
(BLUE)
MAIN FUSE BLOCK
MAIN FUSE
BLOCK
X-01
MAIN
100A
BTN
60A
HEAD
30A
TAIL
15A

Headlights (MX-6)
Circuit diagram
Federal and California

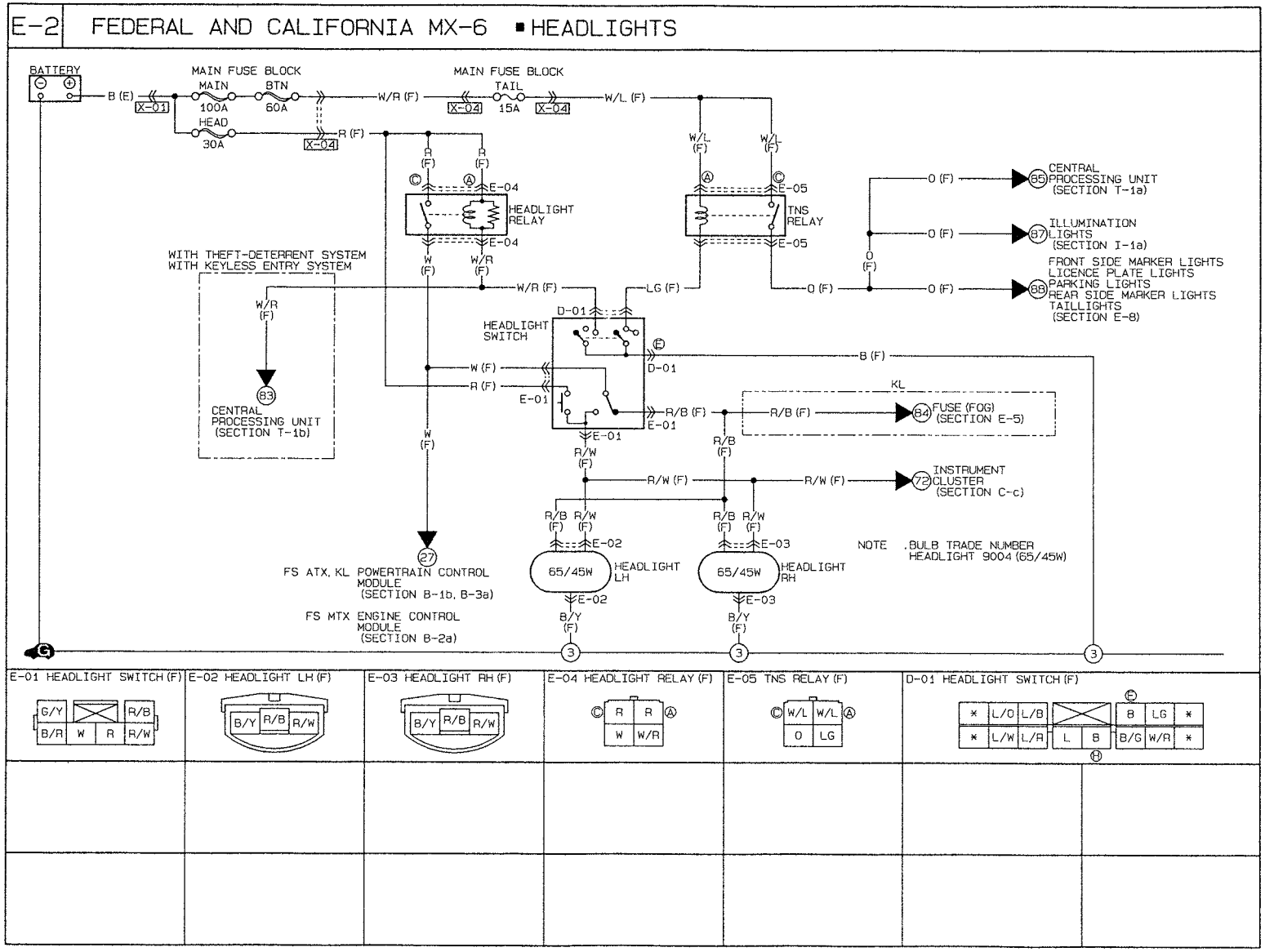

E-4 CANADA MX-6 ■ HEADLIGHTS

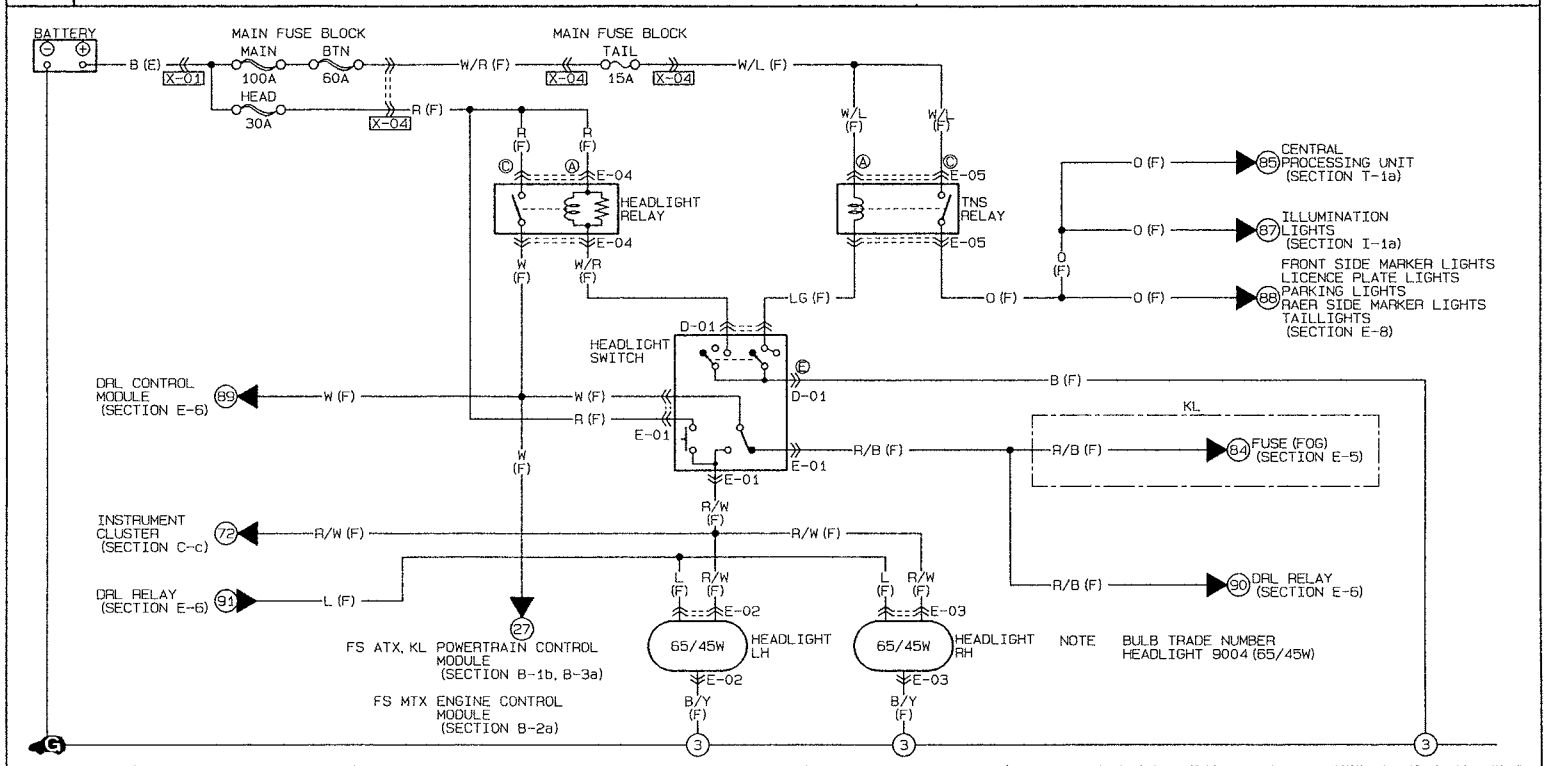

E-01 HEADLIGHT SWITCH (F)	E-02 HEADLIGHT LH (F)	E-03 HEADLIGHT RH (F)	E-04 HEADLIGHT RELAY (F)	E-05 TNS RELAY (F)	D-01 HEADLIGHT SWITCH (F)
G/Y, R/B, B/R, W, R, R/W	B/Y, L, R/W	B/Y, L, R/W	R, R, W, W/R	W/L, W/L, O, LG	* L/O L/B, * L/W L/R, L B, B LG *, B/G W/R *

Connector locations
Federal and California

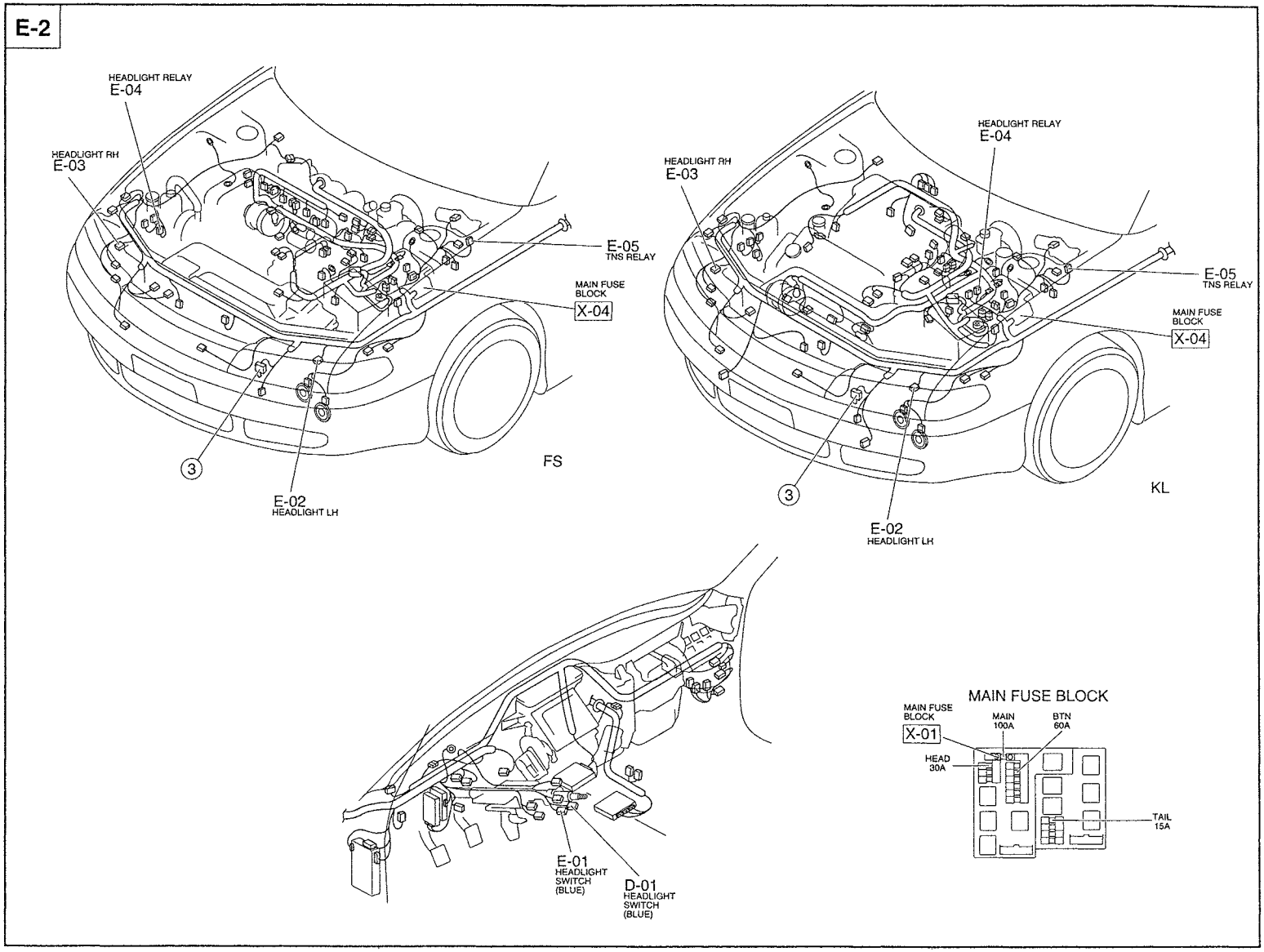

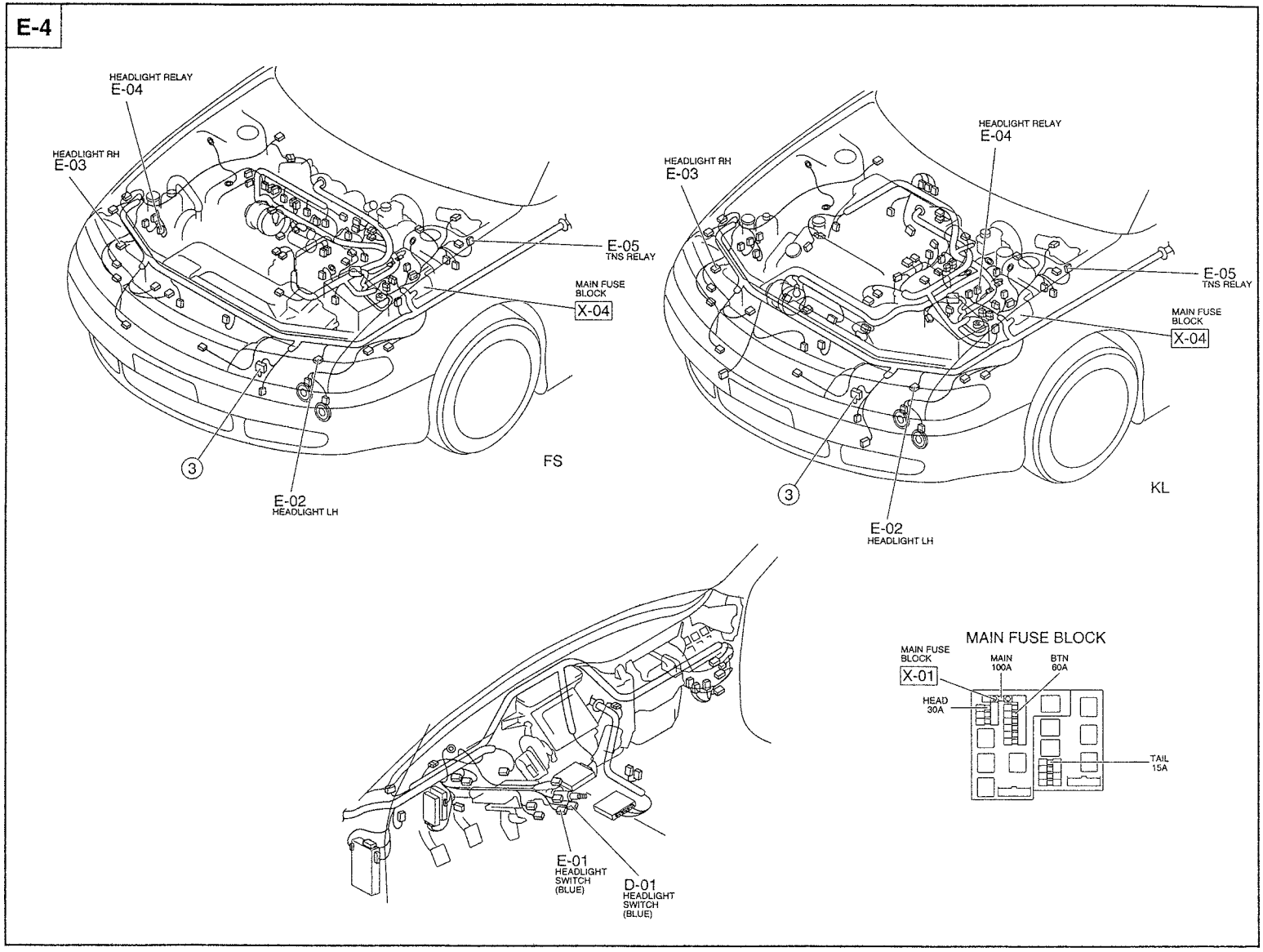
E-4
HEADLIGHT RELAY
E-04
HEADLIGHT RH
E-03
E-05
TNS RELAY
MAIN FUSE
BLOCK
X-04
3
E-02
HEADLIGHT LH
FS
HEADLIGHT RELAY
E-04
HEADLIGHT RH
E-03
E-05
TNS RELAY
MAIN FUSE
BLOCK
X-04
3
E-02
HEADLIGHT LH
KL
MAIN FUSE BLOCK
MAIN FUSE
BLOCK
X-01
MAIN
100A
BTN
60A
HEAD
30A
TAIL
15A
E-01
HEADLIGHT
SWITCH
(BLUE)
D-01
HEADLIGHT
SWITCH
(BLUE)

Checklist

Procedure/Proper operation	Symptom	Flowchart No.
1. Turn headlight switch on. 2. Verify that headlights and TNS (taillights, parking lights, front side marker lights, rear side marker lights, and licence plate light) illuminate. 3. Set dimmer switch to low-beam position and verify that low-beam bulbs illuminate. 4. Set dimmer switch to high-beam position and verify that high-beam and low-beam bulbs illuminate (626). Set dimmer switch to high-beam position and verify that high-beam bulbs illuminate (MX-6). 5. Verify that flash-to-pass function operates normally (high-beam bulbs) with light switch at any position.	TNS and headlights do not illuminate	1
	Headlights do not illuminate	2
	Low-beam headlights do not illuminate (626)	3
	High-beam headlights do not illuminate (626)	4
	Low-beam headlights do not illuminate (MX-6)	5
	High-beam headlights do not illuminate (MX-6)	6

Flowchart No.1	Symptom	TNS and headlights do not illuminate

Possible cause
- Open or short circuit in wiring harness
- Poor connection of connector

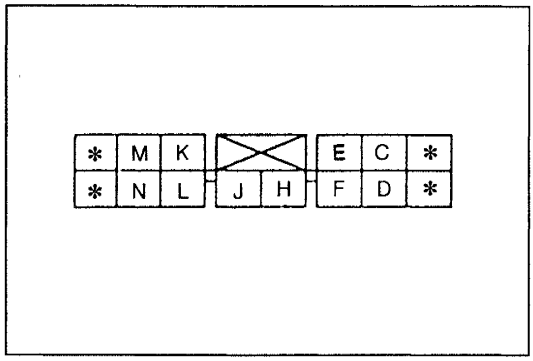

Step 1
Check for continuity between terminal E (B) of the combination switch connector and ground.

Continuity	Action
Yes	Go to Step 2
No	Repair wiring harness (Combination switch—GND)

Step 2
Refer to the appropriate flowchart.

Symptom	Refer to page
Headlights do not illuminate	E–17
TNS do not illuminate	E–40

Flowchart No.2	Symptom	Headlights do not illuminate

Possible cause
- Burnt HEAD 30A fuse
- Damaged headlight relay
- Damaged combination switch
- Open or short circuit in wiring harness
- Poor connection of connector

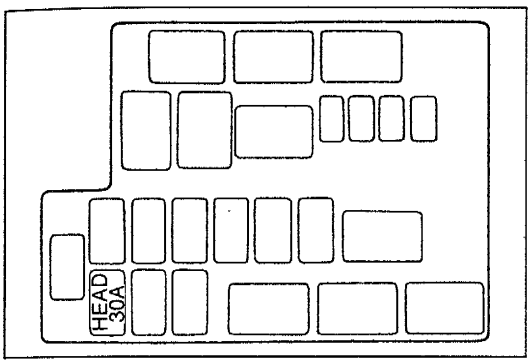

Step 1
Check HEAD 30A fuse in the main fuse block.

Fuse	Action
OK	Go to Step 2
Burnt	Replace fuse after checking and repairing wiring harness

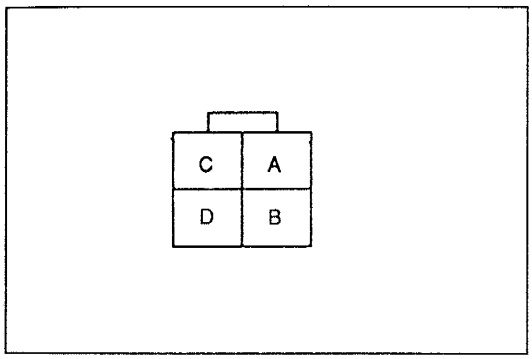

Step 2
1. Remove the headlight relay.
2. Measure the voltage at terminals A (R) and C (R) of the headlight relay connector.

B+: Battery positive voltage

Voltage	Action
B+	Go to Step 3
Other	Repair wiring harness (HEAD 30A fuse—Headlight relay)

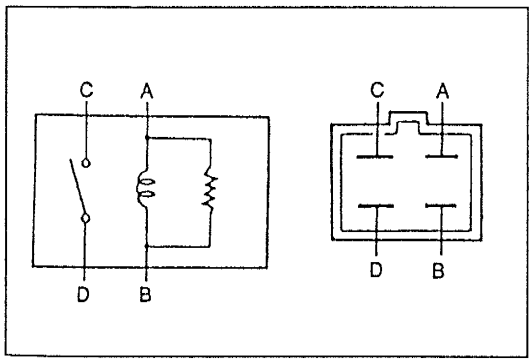

Step 3
1. Apply battery positive voltage and check for continuity between the terminals of the headlight relay.

O–O : Continuity B+: Battery positive voltage

Step \ Terminal	A	B	C	D
1	O	O		
2	B+	GND	O	O

2. If correct, install the headlight relay and go to Step 4.
3. If not as specified, replace the headlight relay.

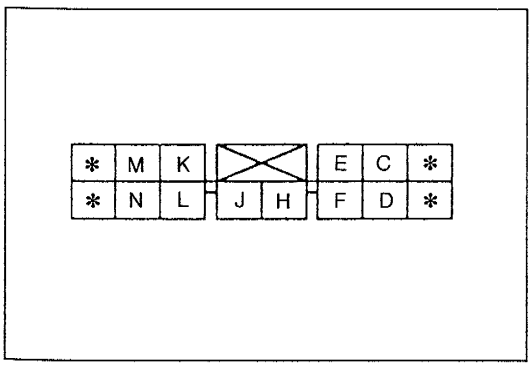

Step 4
1. Remove the column cover.
   (Refer to the 1996 626/MX-6 Workshop Manual, section S.)
2. Measure the voltage at terminal D (W/R) of the combination switch connector.

B+: Battery positive voltage

Voltage	Action
B+	Go to Step 5
Other	Repair wiring harness (Headlight relay—Combination switch)

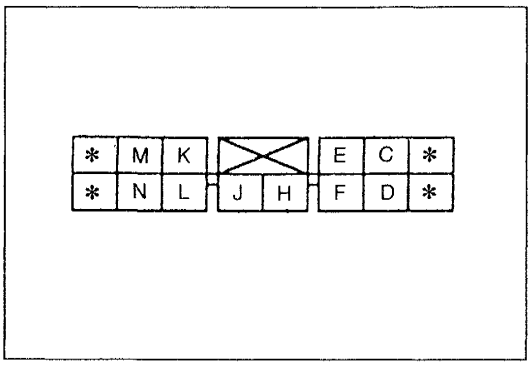

Step 5

1. Disconnect the combination switch connector.
2. Turn the headlight switch on (second position).
3. Check for continuity between terminals D (W/R) and E (B) of the combination switch.

Continuity	Action
Yes	Go to Step 6
No	Replace combination switch

Step 6

Refer to the appropriate flowchart.

Symptom	Refer to page
Low-beam headlights do not illuminate (626)	E–19
High-beam headlights do not illuminate (626)	E–20
Low-beam headlights do not illuminate (MX-6)	E–21
High-beam headlights do not illuminate (MX-6)	E–23

Flowchart No.3	Symptom	Low-beam headlights do not illuminate (626)

Possible cause
- Burnt headlight bulbs
- Damaged DRL relay
- Open or short circuit in wiring harness
- Poor connection of connector

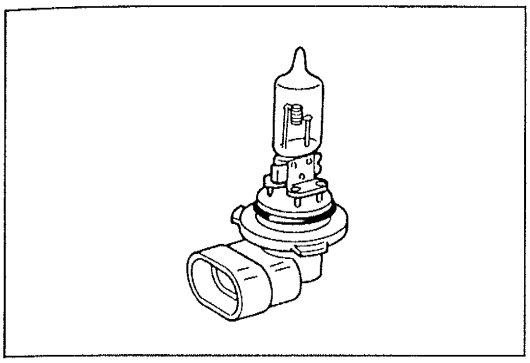

Step 1
Remove and check the low-beam headlight bulbs. (Refer to page E–47.)

Bulb	Action
OK	Go to Step 4 [USA]
	Go to Step 2 [Canada]
Burnt	Replace bulb

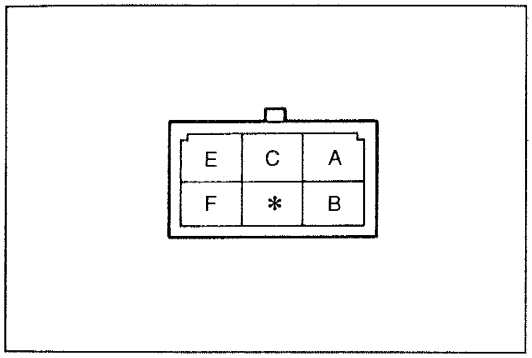

Step 2
1. Remove the front side trim.
   (Refer to the 1996 626/MX-6 Workshop Manual, section S.)
2. Disconnect the DRL relay connector.
3. Turn the headlight switch on (second position).
4. Measure the voltage at terminal F (W [626] or R/B [MX-6]) of the DRL relay connector.

B+: Battery positive voltage

Voltage	Action
B+	Go to Step 3
Other	Repair wiring harness (Headlight relay—DRL relay)

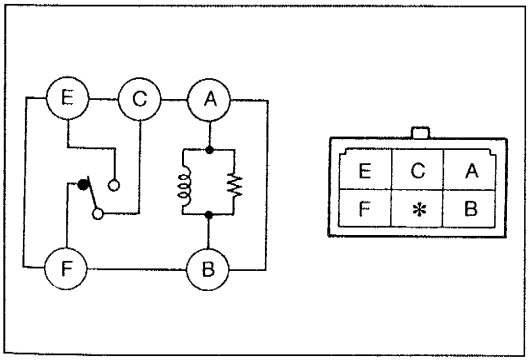

Step 3
Check for continuity between terminal C (L) and F (W [626] or R/B [MX-6]) of the DRL relay connector.

Continuity	Action
Yes	Go to Step 4
No	Replace DRL relay

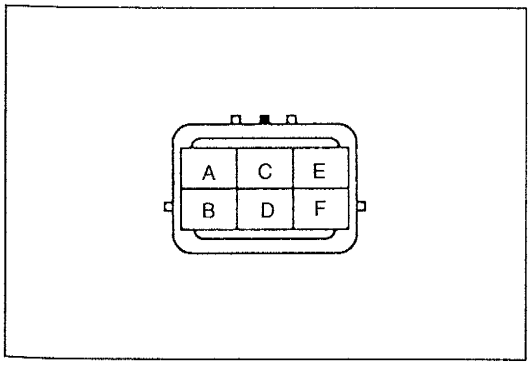

Step 4
1. Disconnect the headlight connector.
2. Turn the headlight switch on (second position).
3. Measure the voltage at terminal C (W) of the headlight connector.

B+: Battery positive voltage

Voltage	Action
B+	Repair wiring harness (Headlight—GND)
Other	Repair wiring harness (Headlight relay—Headlight [USA]) (DRL relay—Headlight [Canada])

Flowchart No.4	Symptom	High-beam headlights do not illuminate (626)

Possible cause
- Damaged combination switch
- Burnt headlight bulbs
- Open or short circuit in wiring harness
- Poor connection of connector

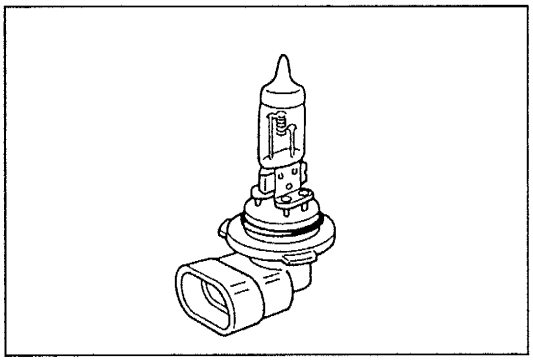

Step 1
Remove and check the high-beam headlight bulbs. (Refer to page E–47.)

Bulb	Action
OK	Go to Step 2
Burnt	Replace bulb

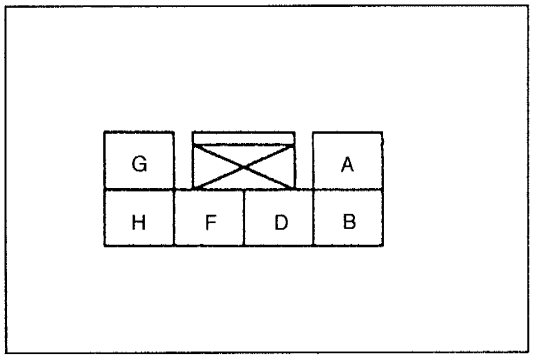

Step 2
1. Remove the column cover. (Refer to the 1996 626/MX-6 Workshop Manual, section S.)
2. Turn the headlight switch on (second position, high-beam).
3. Measure the voltage at terminal F (W) of the combination switch connector.

B+: Battery positive voltage

Voltage	Action
B+	Go to Step 3
Other	Repair wiring harness (Headlight relay—Combination switch)

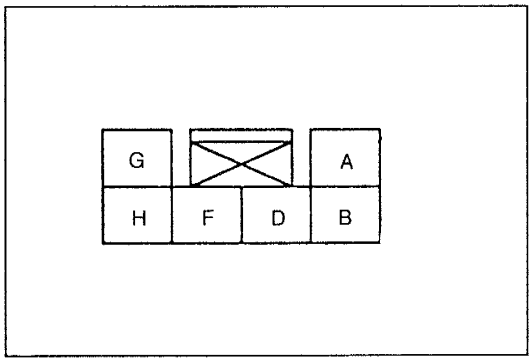

Step 3
1. Disconnect the combination switch connector.
2. Check for continuity between terminals F (W) and B (R/W) of the combination switch.

Continuity	Action
Yes	Reconnect connector and go to Step 4
No	Replace combination switch (Refer to section Z4)

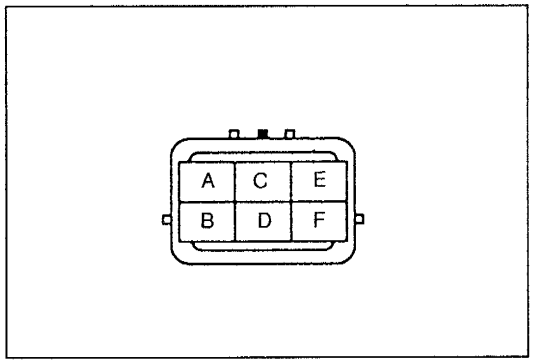

Step 4
Measure the voltage at terminal A (R/W) of the headlight connector.

B+: Battery positive voltage

Voltage	Action
B+	Repair wiring harness (Headlight—GND)
Other	Repair wiring harness (Combination switch—Headlight)

Flowchart No.5	Symptom	Low-beam headlights do not illuminate (MX-6)

Possible cause
- Damaged combination switch
- Damaged DRL relay
- Burnt headlight bulbs
- Open or short circuit in wiring harness
- Poor connection of connector

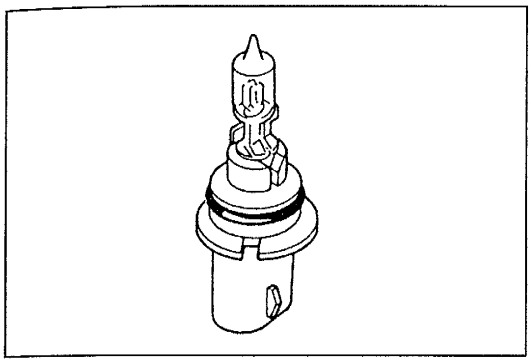

Step 1
Remove and check the headlight bulbs.
(Refer to page E–48.)

Bulb	Action
OK	Go to Step 2
Burnt	Replace bulb

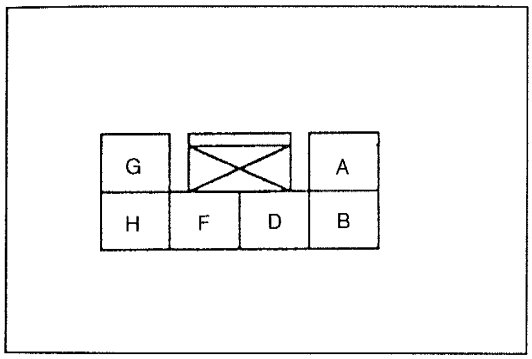

Step 2
1. Remove the column cover.
   (Refer to the 1996 626/MX-6 Workshop Manual, section S.)
2. Turn the headlight switch on (second position, low-beam).
3. Measure the voltage at terminal F (W) of the combination switch connector.

B+: Battery positive voltage

Voltage	Action
B+	Go to Step 3
Other	Repair wiring harness (Headlight relay—Combination switch)

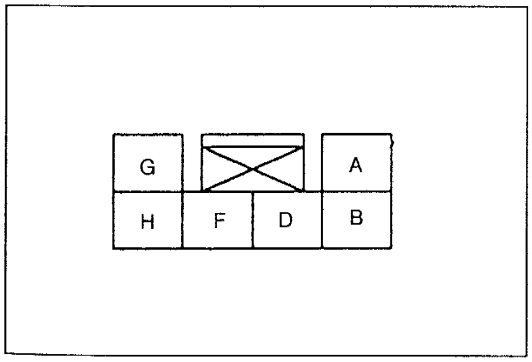

Step 3
1. Disconnect the combination switch connector.
2. Check for continuity between terminals F (W) and A (R/B) of the combination switch.

Continuity	Action
Yes	Reconnect connector and go to Step 6 [USA] or Step 4 [Canada]
No	Replace combination switch (Refer to section Z4)

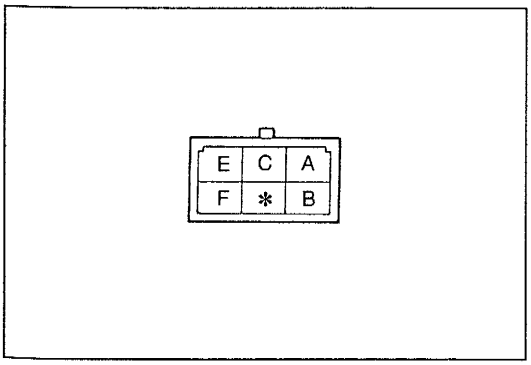

Step 4
1. Remove the front side trim.
   (Refer to the 1996 626/MX-6 Workshop Manual, section S.)
2. Disconnect the DRL relay connector.
3. Turn the headlight switch on (second position, low-beam).
4. Measure the voltage at terminal F (W [626] or R/B [MX-6]) of the DRL relay connector.

B+: Battery positive voltage

Voltage	Action
B+	Go to Step 5
Other	Repair wiring harness (Combination switch—DRL relay)

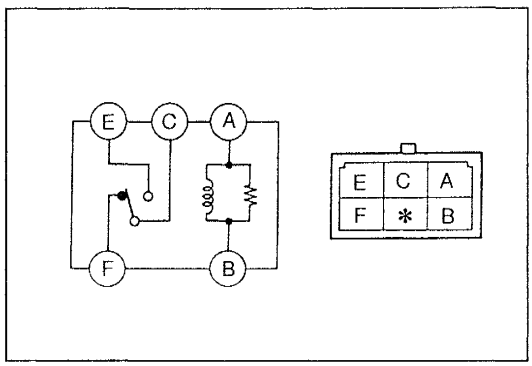

Step 5

Check for continuity between terminal C (L) and F (W) of the DRL relay connector.

B+: Battery positive voltage

Continuity	Action
Yes	Go to Step 6
No	Replace DRL relay

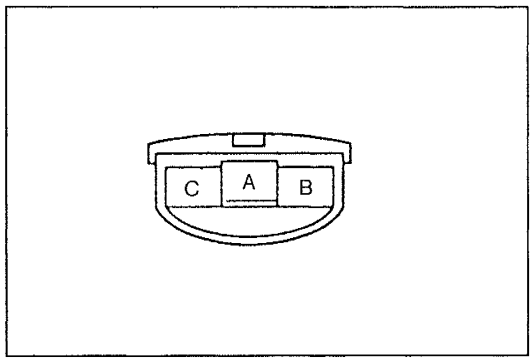

Step 6

1. Disconnect the headlight connector.
2. Turn the headlight switch on (second position, low-beam).
3. Measure the voltage at terminal A (R/B [USA] or L [Canada]) of the headlight connector.

B+: Battery positive voltage

Voltage	Action
B+	Repair wiring harness (Headlight—GND)
Other	Repair wiring harness (Combination switch—Headlight [USA]) (DRL relay—Headlight [Canada])

Flowchart No.6	Symptom	High-beam headlights do not illuminate (MX-6)

Possible cause
- Damaged combination switch
- Burnt headlight bulbs
- Open or short circuit in wiring harness
- Poor connection of connector

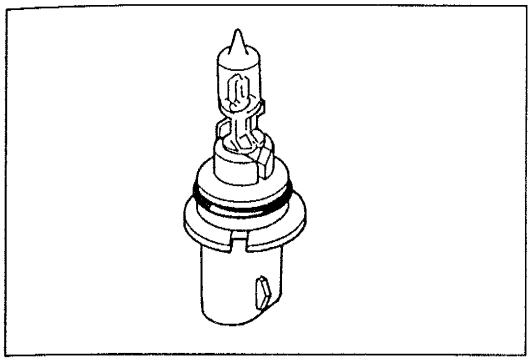

Step 1
Remove and check the headlight bulbs.
(Refer to page E–48).

Bulb	Action
OK	Go to Step 2
Burnt	Replace bulb

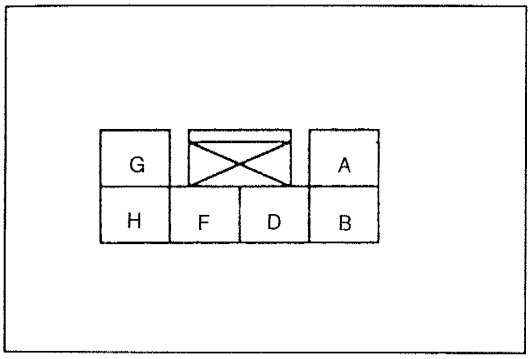

Step 2
1. Remove the column cover.
   (Refer to the 1996 626/MX-6 Workshop Manual, section S.)
2. Turn the headlight switch on (second position, high-beam).
3. Measure the voltage at terminal F (W) of the combination switch connector.

B+: Battery positive voltage

Voltage	Action
B+	Go to Step 3
Other	Repair wiring harness (Headlight relay—Combination switch)

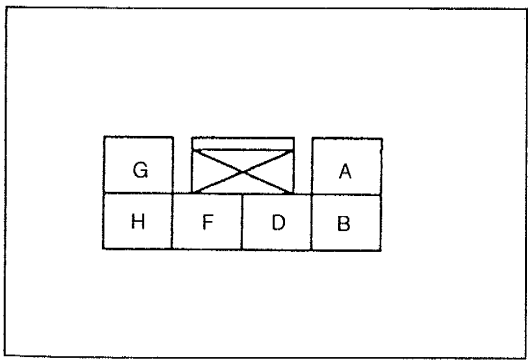

Step 3
1. Disconnect the combination switch connector.
2. Check for continuity between terminals F and B of the combination switch.

Continuity	Action
Yes	Reconnect connector and go to Step 4
No	Replace combination switch (Refer to section Z4)

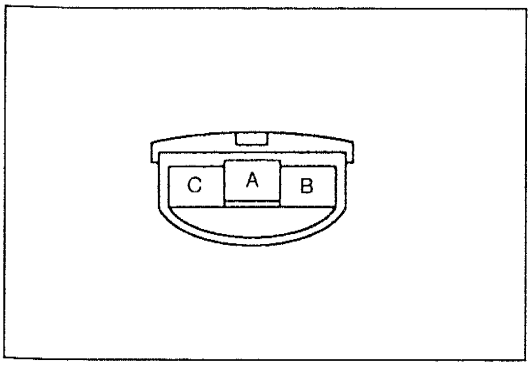

Step 4
Measure the voltage at terminal B (R/W) of the headlight connector.

B+: Battery positive voltage

Voltage	Action
B+	Repair wiring harness (Headlight—GND)
Other	Repair wiring harness (Combination switch—Headlight)

Daytime Running Lights (Canada)
Circuit diagram

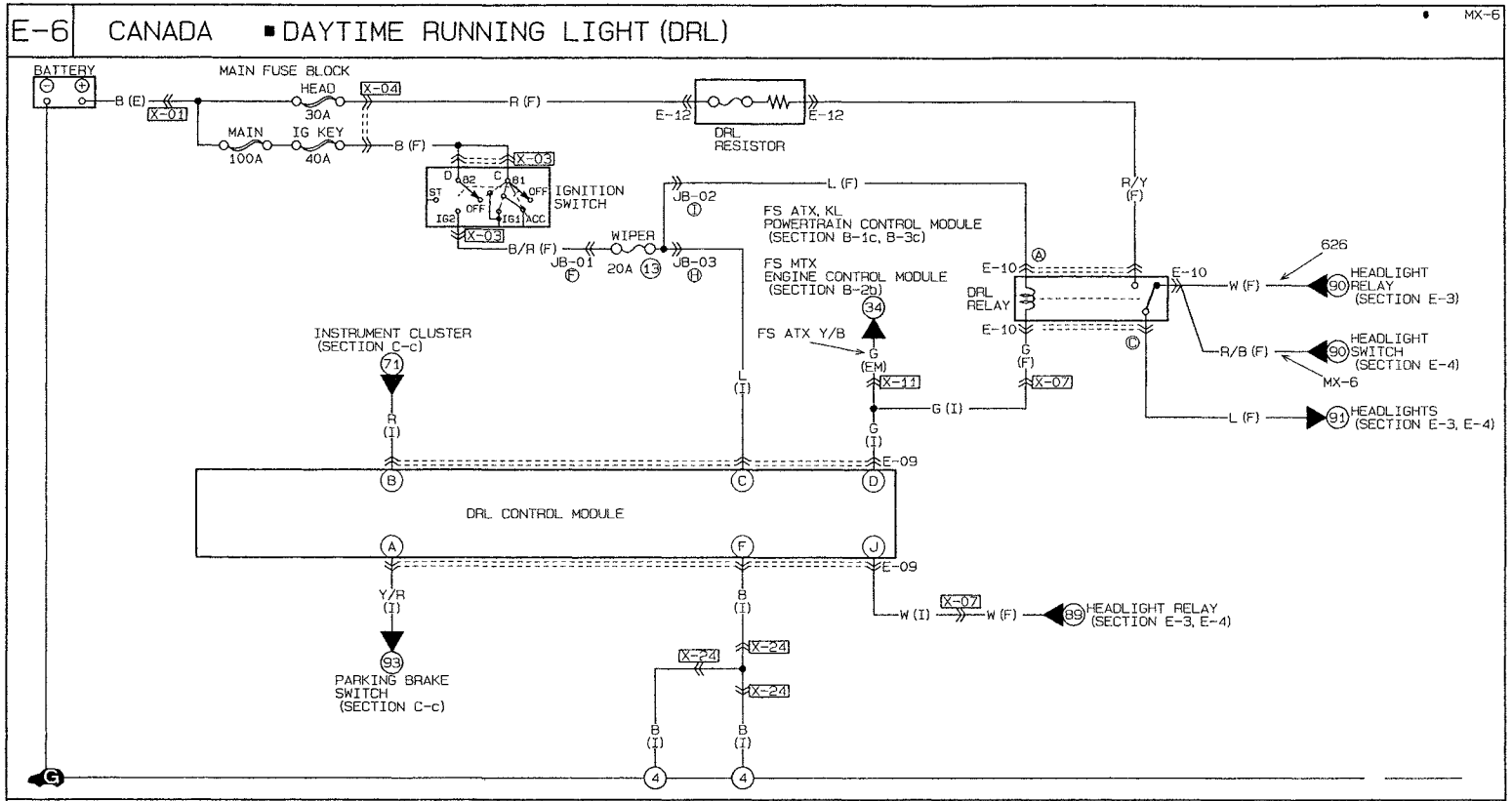

E-09 DRL CONTROL MODULE (I)	E-10 DRL RELAY (F)	E-12 DRL RESISTOR (F)				
I: * / W; J: * / H: B; C: L / D: G; A: Y/R / B: R	C: R/Y / ■R/B / W; A: L / * / G	R / R/Y				

Connector locations

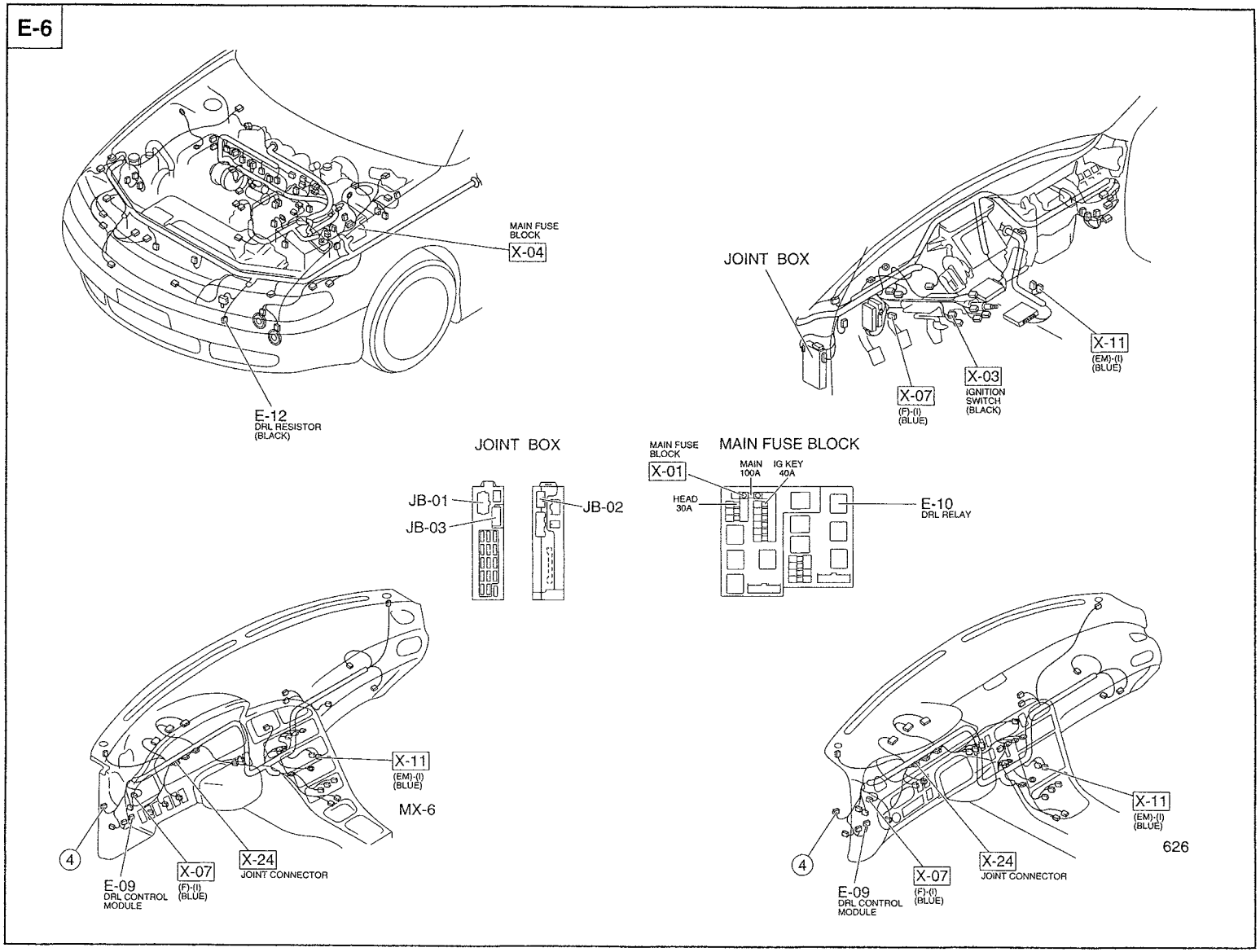

Front Fog Lights
Circuit diagram

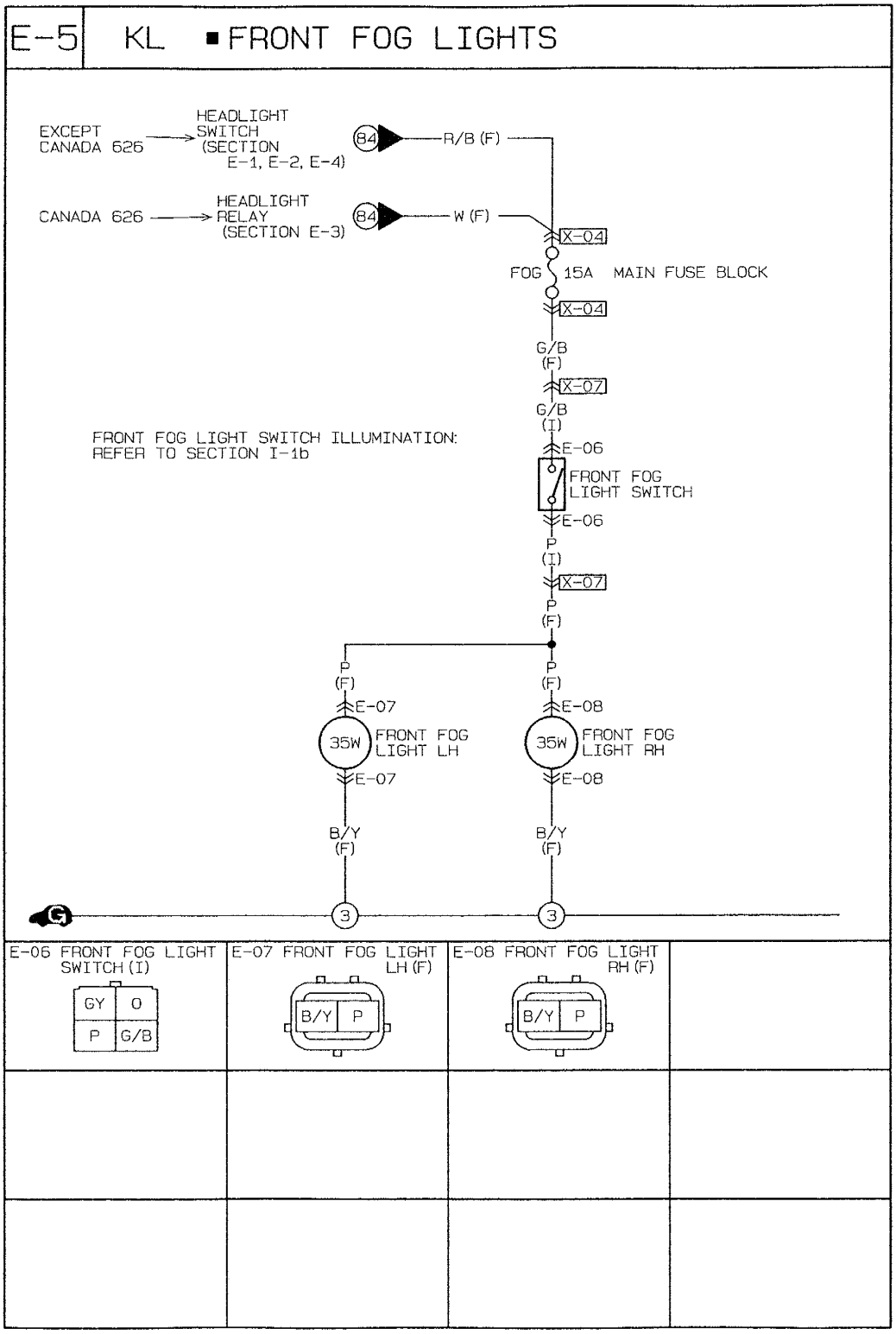

Connector locations

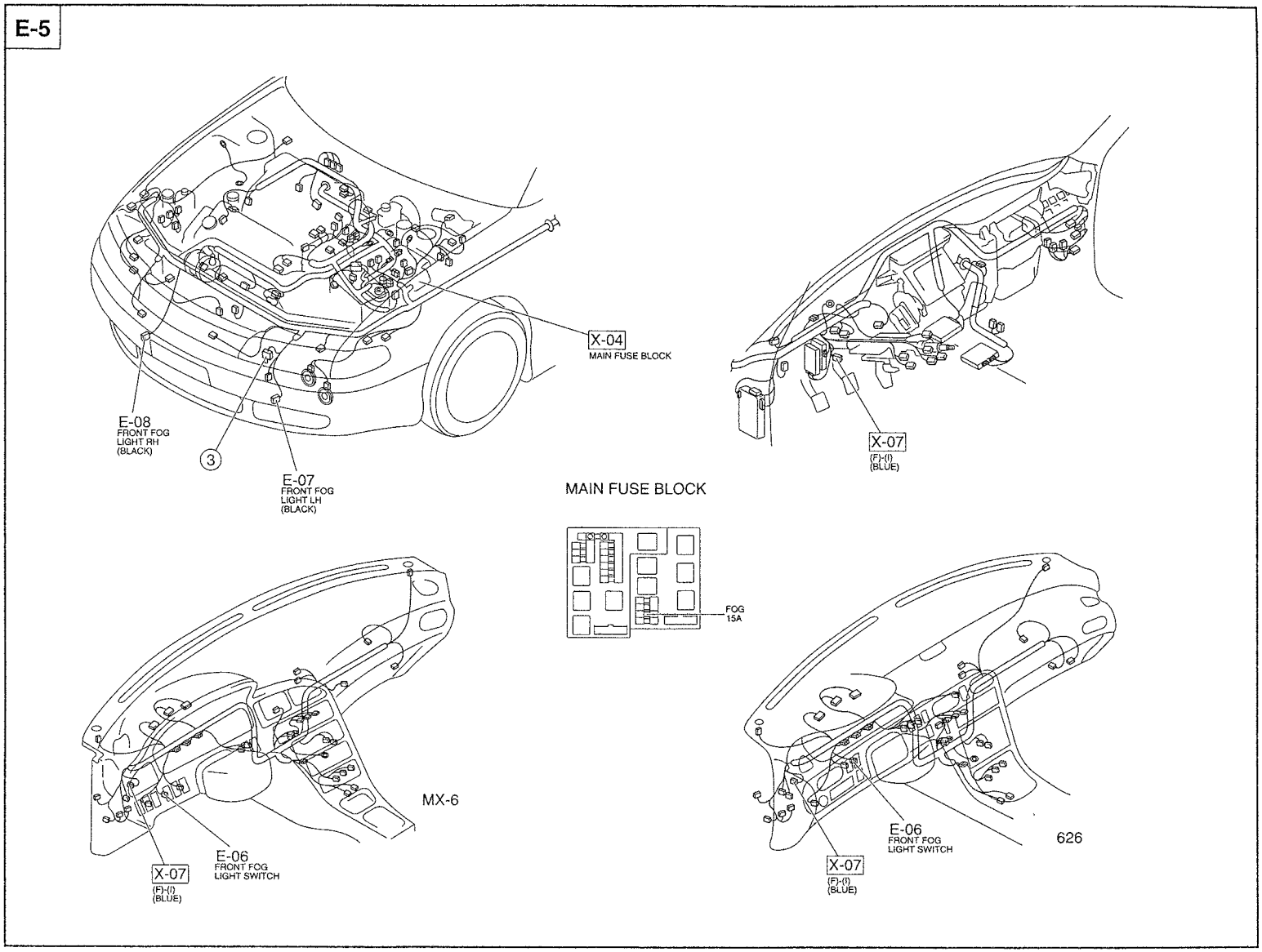

Checklist

Procedure/Proper operation	Symptom	Flowchart No.
Daytime running lights (Canada) 1. Turn switch on. 2. Verify that low-beam headlights, taillight, and licence plate light illuminate.	Daytime running lights do not illuminate (Canada)	1
	Daytime running lights do not turn off when parking brake lever is set (Canada)	2
	Daytime running lights do not turn off when ignition switch is turned to LOCK or ACC (Canada)	3
Front fog lights 1. Turn switch to second position and front fog light switch on. 2. Verify that both front fog lights illuminate. 3. Turn dimmer switch to high and verify that front fog lights turn off.	Front fog lights do not illuminate	4
	Front fog lights do not turn off	5

Flowchart No.1	Symptom	Daytime running lights do not illuminate (Canada)

Possible cause
- Burnt WIPER 20A fuse
- Damaged DRL resistor
- Damaged DRL relay
- Damaged DRL control module
- Open or short circuit in wiring harness
- Poor connection of connector

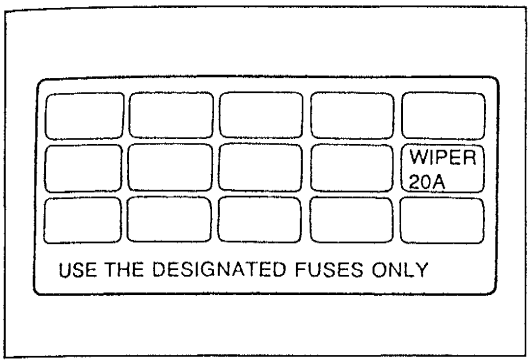

Step 1
Check WIPER 20A fuse in the fuse block and the DRL resistor 10A fuse.

Fuse	Action
OK	Go to Step 2
Burnt	Replace fuse after checking and repairing wiring harness

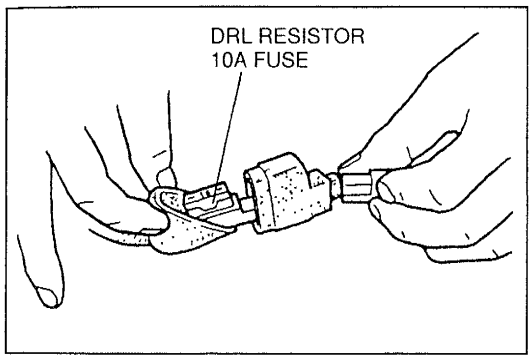

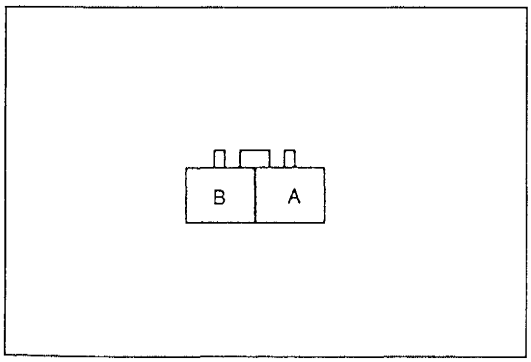

Step 2
Measure the resistance between the terminals of the DRL resistor.

Resistance	Action
0.3Ω	Go to Step 3
Other	Replace DRL resistor

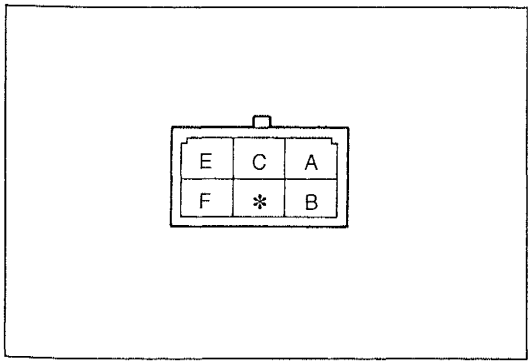

Step 3
1. Remove the front side trim.
   (Refer to the 1996 626/MX-6 Workshop Manual, section S.)
2. Disconnect the DRL relay connector.
3. Measure the voltage at terminal E (R/Y) of the DRL relay connector.

B+: Battery positive voltage

Voltage	Action
B+	Go to Step 4
Other	Repair wiring harness (HEAD 30A fuse—DRL relay)

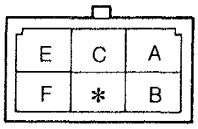

Step 4
1. Turn the ignition switch to ON.
2. Measure the voltage at terminal A (L) of the DRL relay connector.

B+: Battery positive voltage

Voltage	Action
B+	Go to Step 5
Other	Repair wiring harness (WIPER 20A fuse—DRL relay)

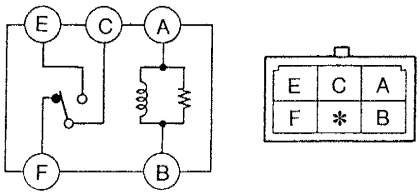

Step 5
1. Turn the ignition switch to LOCK.
2. Remove the DRL relay.
3. Apply battery positive voltage and check for continuity between the relay terminals.

O—O : Continuity B+: Battery positive voltage

Step \ Terminal	A	B	E	C	F
1	O—O			O—O	
2	GND	B+	O—O		

4. If correct, install the DRL relay and go to Step 6.
5. If not as specified, replace the DRL relay.

Step 6
1. Turn the ignition switch to ON.
2. Measure the voltage at terminal C (L) of the DRL control module connector.

B+: Battery positive voltage

Voltage	Action
B+	Go to Step 7
Other	Repair wiring harness (WIPER 20A fuse—DRL control module)

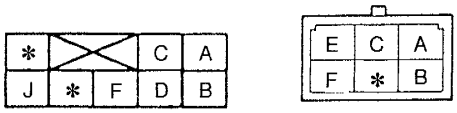

DRL CONTROL MODULE CONNECTOR DRL RELAY CONNECTOR

Step 7
1. Turn the ignition switch to LOCK.
2. Disconnect the DRL control module connector.
3. Check for continuity between terminal D (G) of the DRL control module connector and terminal B (G) of the DRL relay connector.

Continuity	Action
Yes	Go to Step 8
No	Repair wiring harness (DRL control module—DRL relay)

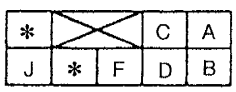

Step 8
Check for continuity between terminal F (B) of the DRL control module connector and ground.

Continuity	Action
Yes	Go to Step 9
No	Repair wiring harness (DRL control module—GND)

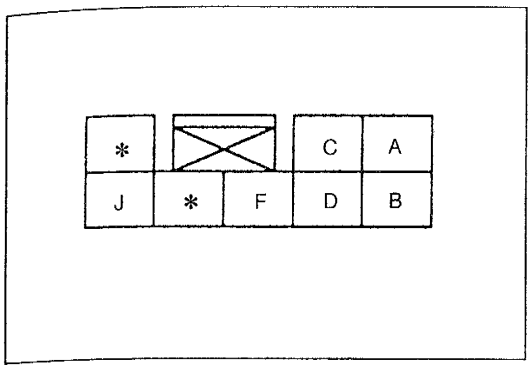

Step 9

1. Release the parking brake.
2. Check for continuity between terminal A (Y/R) of the DRL control module connector and ground.

Continuity	Action
Yes	Repair wiring harness (DRL control module—Parking brake switch)
No	Go to Step 10 (626)
	Replace DRL control module (MX-6)

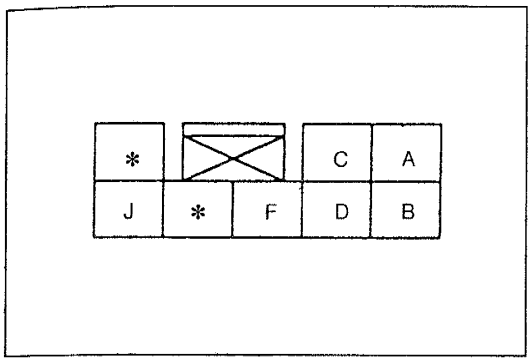

Step 10

1. Turn the ignition switch to ON.
2. Turn the headlight switch on (second position).
3. Measure the voltage at terminal J (W) of the DRL control module connector.

B+: Battery positive voltage

Voltage	Action
B+	Replace DRL control module
Other	Repair wiring harness (Combination switch—DRL resistor)

Flowchart No.2	Symptom	Daytime running lights do not turn off when parking brake lever is set (Canada)

Possible cause
- Damaged DRL control module
- Damaged parking brake switch
- Open or short circuit in wiring harness
- Poor connection of connector

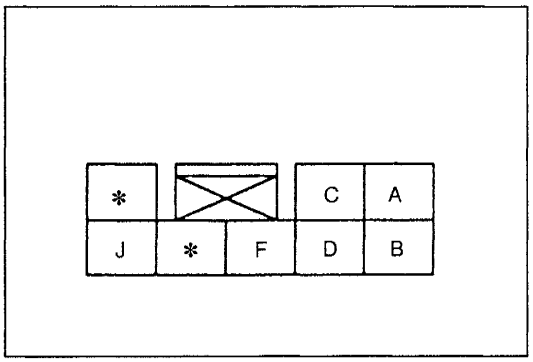

Step 1
1. Set the parking brake lever.
2. Check for continuity between terminal A (Y/R) of the DRL control module connector and ground.

Continuity	Action
Yes	Replace DRL control module
No	Go to Step 2

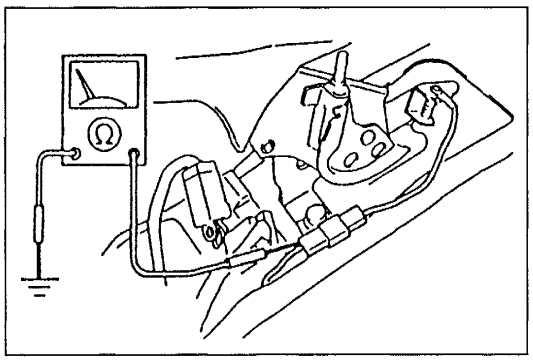

Step 2
1. Remove the rear console.
   (Refer to the 1996 626/MX-6 Workshop Manual, section S.)
2. Disconnect the parking brake switch connector.
3. Check for continuity between the terminal of the parking brake switch and ground.

Continuity	Action
Yes	Repair wiring harness (Parking brake switch—DRL control module)
No	Check parking brake switch and ground

Flowchart No.3	Symptom	Daytime running lights do not turn off when ignition switch is turned to LOCK or ACC (Canada)

Possible cause
- Damaged DRL relay
- Open or short circuit in wiring harness

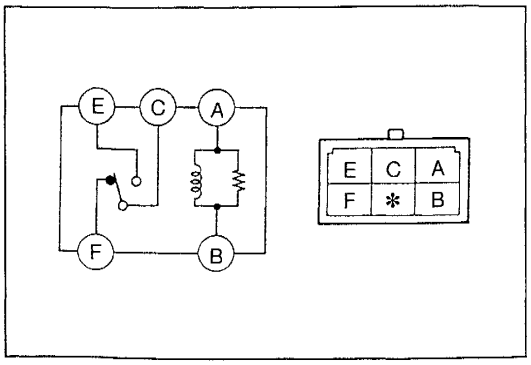

Remedy
1. Remove the DRL relay.
   (Refer to section Z2.)
2. Apply battery positive voltage and check for continuity between the relay terminals.

○—○ : Continuity B+: Battery positive voltage

Step \ Terminal	A	B	E	C	F
1	○	○		○	○
2	GND	B+	○	○	

3. If not as specified, replace the DRL relay.
4. If correct, repair wiring harness. (ignition switch—DRL relay)

Flowchart No.4	Symptom	Front fog lights do not illuminate

Possible cause
- Burnt FOG 15A fuse
- Burnt light bulbs
- Damaged front fog light switch
- Open or short circuit in wiring harness
- Poor connection of connector

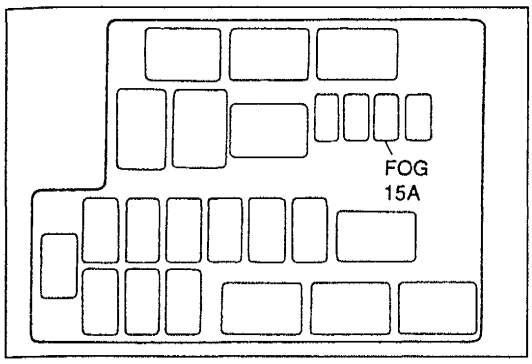

Step 1
Check FOG 15A fuse in the main fuse block.

Fuse	Action
OK	Go to Step 2
Burnt	Replace fuse after checking repairing wiring harness

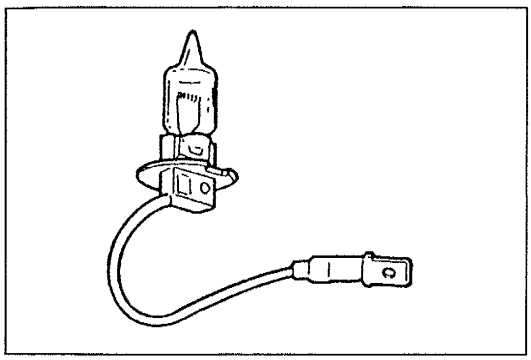

Step 2
Remove and check the front fog light bulbs.
(Refer to page E–49.)

Bulb	Action
OK	Go to Step 3
Burnt	Replace bulb

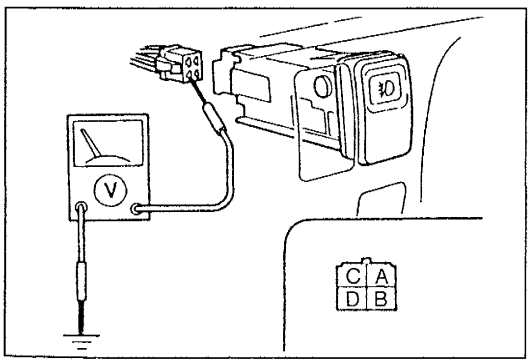

Step 3
1. Remove the switch panel.
   (Refer to the 1996 626/MX-6 Workshop Manual, section S.)
2. Turn the headlight switch on (second position, low beam).
3. Measure the voltage at terminal B (G/B) of the front fog light switch connector .

B+: Battery positive voltage

Voltage	Action
B+	Turn headlight switch off and go to Step 4
Other	Repair wiring harness (FOG 15A fuse—Front fog light switch)

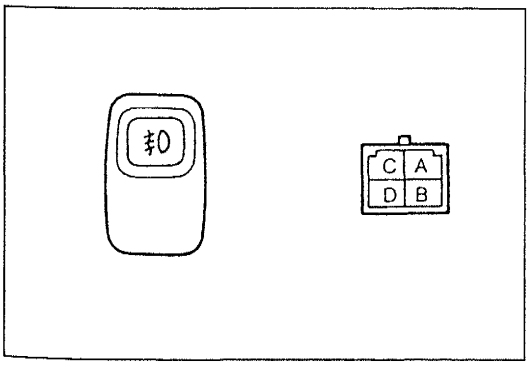

Step 4
1. Remove the front fog light switch.
   (Refer to section Z4.)
2. Check for continuity between the switch terminals.

O–O : Continuity O–⊗–O: Bulb

Terminal / Switch position	A	C	B	D
OFF	O–⊗–O			
ON	O–⊗–O		O–O	

3. If correct, go to Step 5.
4. If not as specified, replace the front fog light switch.

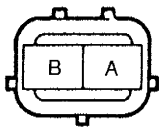

Step 5

1. Disconnect the front fog light connector.
2. Check for continuity between terminal B (B/Y) of the connector and ground.

Continuity	Action
Yes	Repair wiring harness (Front fog light switch—Front fog light)
No	Repair wiring harness (Front fog light—GND)

Flowchart No.5	Symptom	Front fog lights do not turn off

Possible cause

- Damaged front fog light switch

Remedy

- Inspect the front fog light switch.
  (Refer to section Z4.)

Parking Lights, Licence Plate Light, Side Marker Lights, Taillights (626)
Circuit diagram

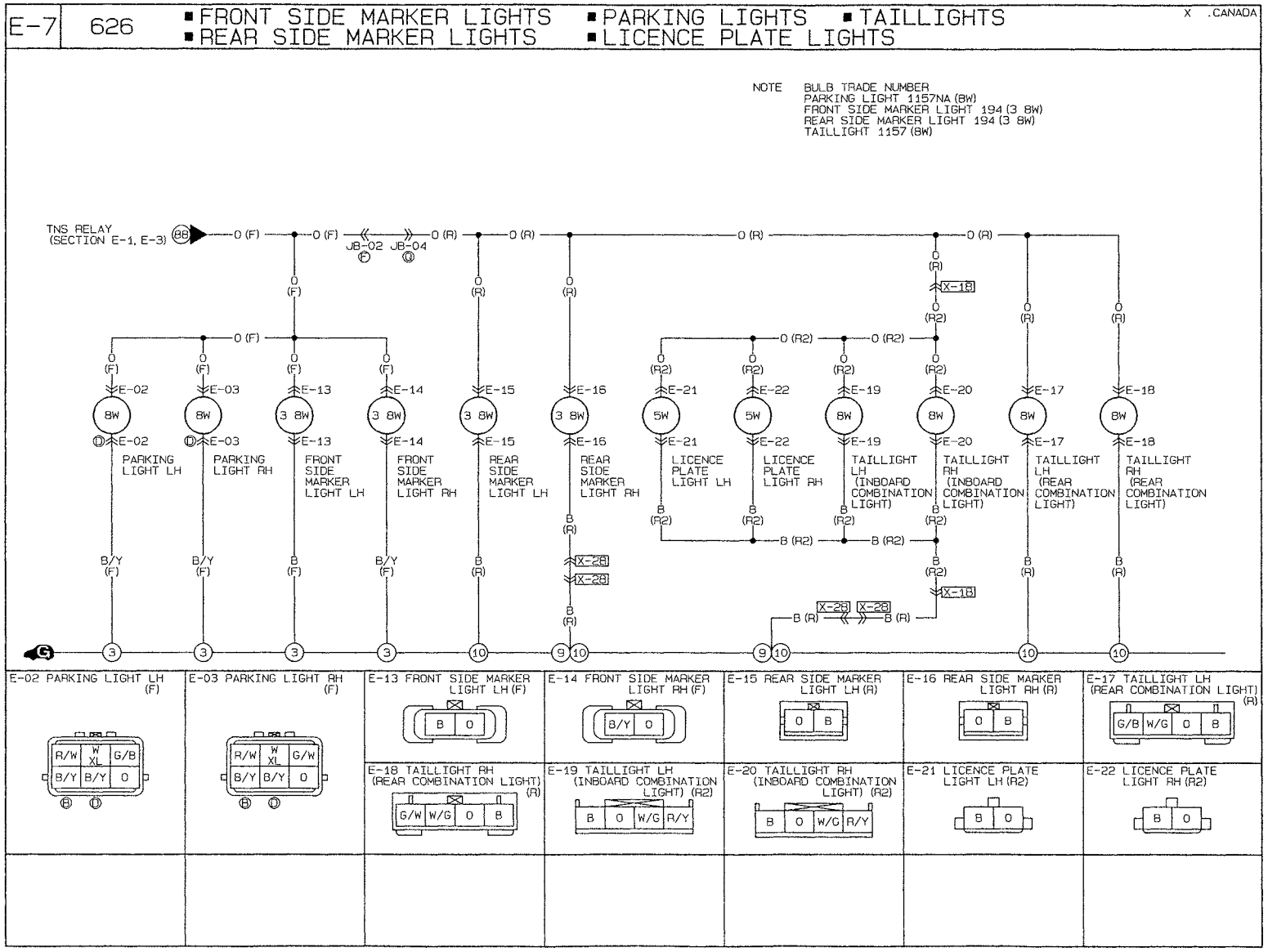

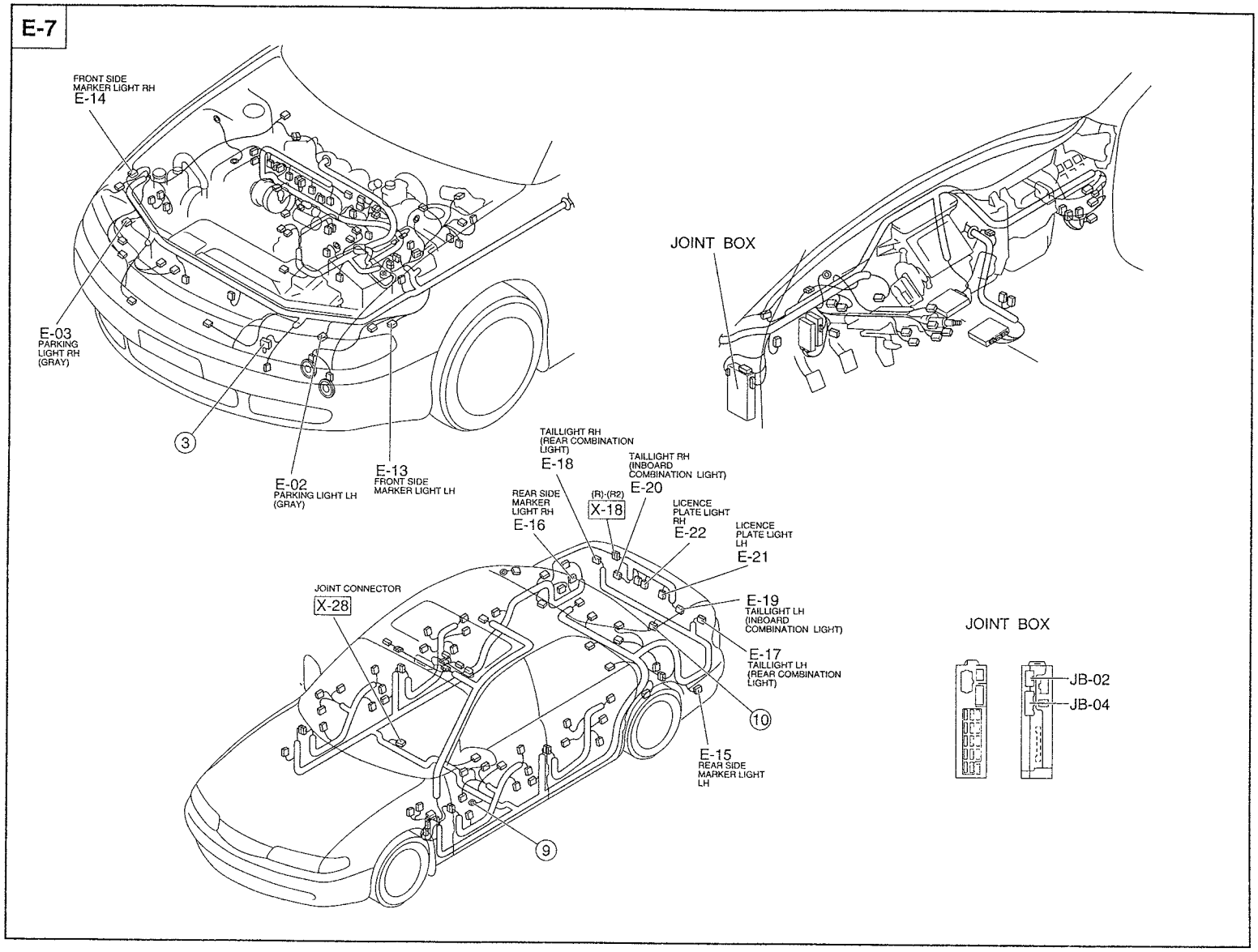
E-7
FRONT SIDE MARKER LIGHT RH
E-14
E-03
PARKING LIGHT RH (GRAY)
3
E-02
PARKING LIGHT LH (GRAY)
E-13
FRONT SIDE MARKER LIGHT LH
JOINT BOX
TAILLIGHT RH (REAR COMBINATION LIGHT)
E-18
TAILLIGHT RH (INBOARD COMBINATION LIGHT)
E-20
REAR SIDE MARKER LIGHT RH
E-16
(R)-(R2)
X-18
LICENCE PLATE LIGHT RH
E-22
LICENCE PLATE LIGHT LH
E-21
JOINT CONNECTOR
X-28
E-19
TAILLIGHT LH (INBOARD COMBINATION LIGHT)
E-17
TAILLIGHT LH (REAR COMBINATION LIGHT)
10
E-15
REAR SIDE MARKER LIGHT LH
9
JOINT BOX
JB-02
JB-04

Parking Lights, Licence Plate Light, Side Marker Lights, Taillights (MX-6)
Circuit diagram

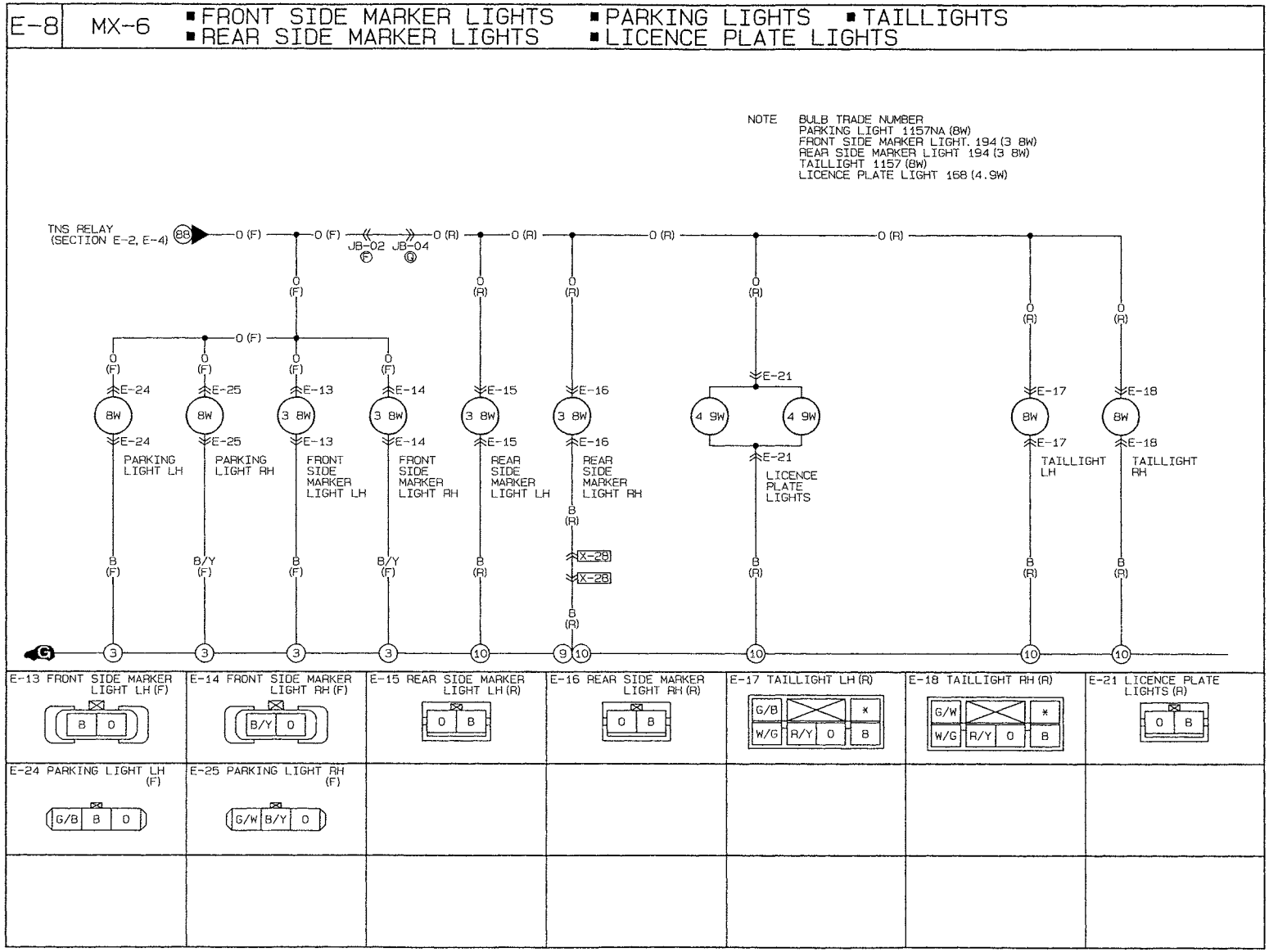

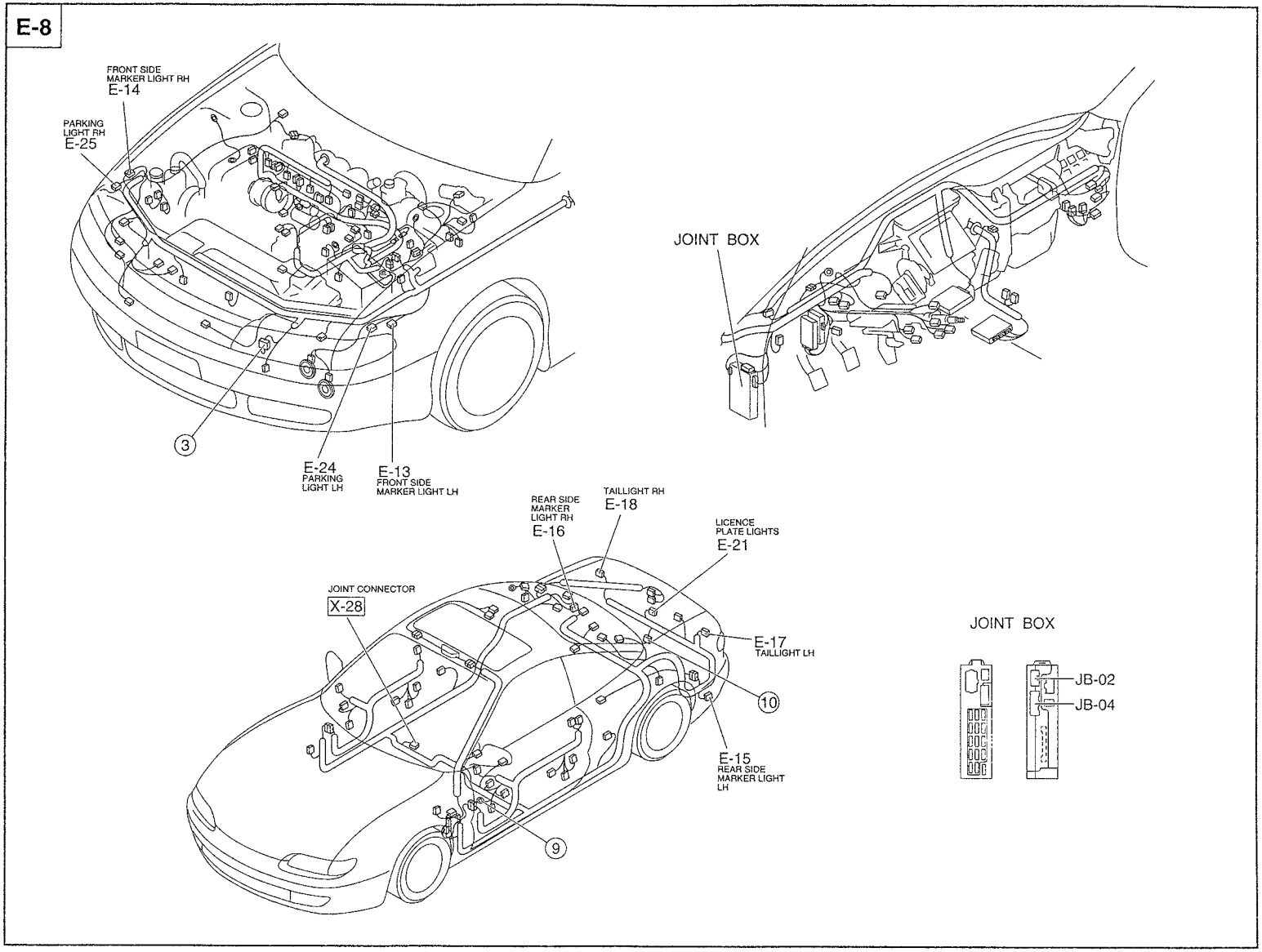
E-8
FRONT SIDE MARKER LIGHT RH
E-14
PARKING LIGHT RH
E-25
3
E-24
PARKING LIGHT LH
E-13
FRONT SIDE MARKER LIGHT LH
JOINT BOX
REAR SIDE MARKER LIGHT RH
E-16
TAILLIGHT RH
E-18
LICENCE PLATE LIGHTS
E-21
JOINT CONNECTOR
X-28
E-17
TAILLIGHT LH
10
E-15
REAR SIDE MARKER LIGHT LH
9
JOINT BOX
JB-02
JB-04

Checklist

Procedure/Proper operation	Symptom	Flowchart No.
1. Turn the headlight switch to first position. 2. Verify that TNS (taillights, parking lights, front side marker lights, rear side marker lights, and licence plate light) illuminate.	TNS do not illuminate	1
	Licence plate light does not illuminate	2
	Taillights do not illuminate	3
	Parking lights do not illuminate	4
	Front and rear side marker lights do not illuminate	5

Flowchart No.1	Symptom	TNS do not illuminate

Possible cause
- Burnt TAIL 15A fuse
- Damaged TNS relay
- Damaged combination switch
- Open or short circuit in wiring harness
- Poor connection of connector

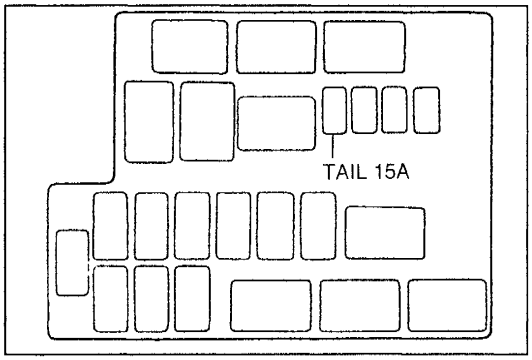

Step 1
Check TAIL 15A fuse in the main fuse block.

Fuse	Action
OK	Go to Step 2
Burnt	Replace fuse after checking and repairing wiring harness

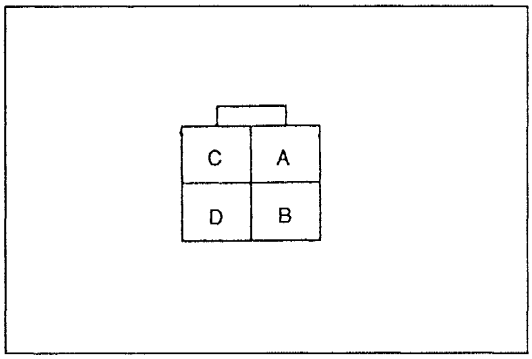

Step 2
1. Remove the TNS relay.
2. Measure the voltage at terminals A (W/L) and C (W/L) of the TNS relay connector.

B+: Battery positive voltage

Voltage	Action
B+	Go to Step 3
Other	Repair wiring harness (TAIL 15A fuse—TNS relay)

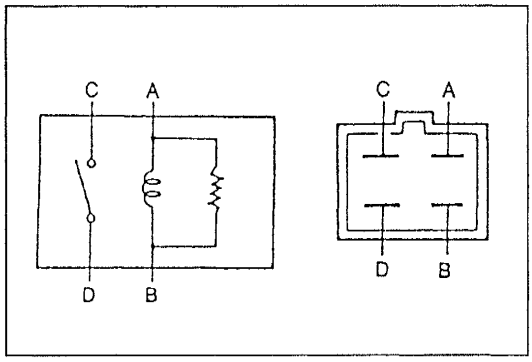

Step 3
1. Apply battery positive voltage and check for continuity between the TNS relay terminals.

O—O : Continuity B+: Battery positive voltage

Step \ Terminal	A	B	C	D
1	O	O		
2	B+	GND	O	O

2. If correct, install the TNS relay and go to Step 4.
3. If not as specified, replace the TNS relay.

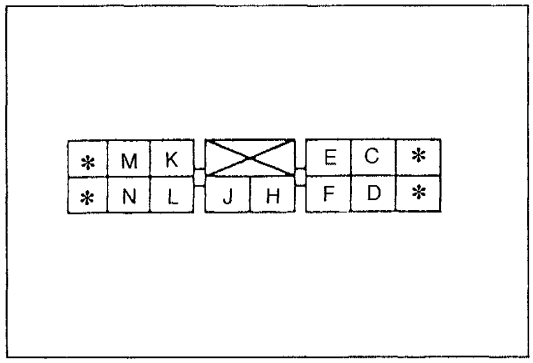

Step 4
1. Remove the column cover.
   (Refer to the 1996 626/MX-6 Workshop Manual, section S.)
2. Measure the voltage at terminal C (LG) of the combination switch connector.

B+: Battery positive voltage

Voltage	Action
B+	Go to Step 5
Other	Repair wiring harness (TNS relay—Combination switch)

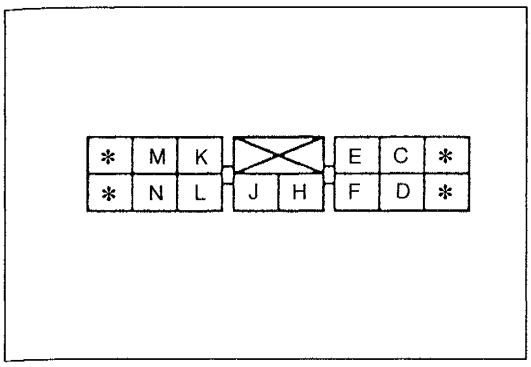

Step 5
1. Disconnect the combination switch connector.
2. Turn the headlight switch on (first position).
3. Check for continuity between terminals C (L/G) and E (B) of the combination switch.

Continuity	Action
Yes	Turn headlight switch off, reconnect connector, and go to Step 6
No	Replace combination switch (Refer to section Z4)

Step 6
Refer to the appropriate flowchart.

Symptom	Refer to page
Licence plate light does not illuminate	E–41
Taillights do not illuminate	E–42
Parking lights do not illuminate	E–43
Front or rear side marker lights do not illuminate	E–44

Flowchart No.2	Symptom	Licence plate light does not illuminate

Possible cause
- Burnt light bulb
- Open or short circuit in wiring harness
- Poor connection of connector

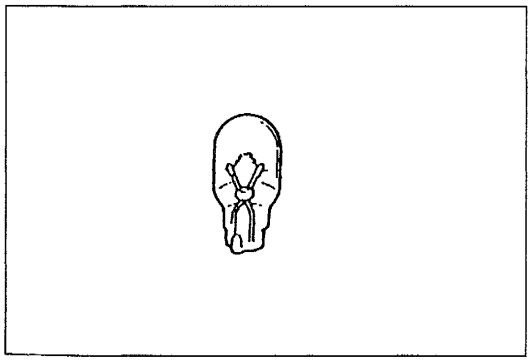

Step 1
Remove and check the licence plate light bulb. (Refer to pages E–52, E–53.)

Bulbs	Action
OK	Go to Step 2
Burnt	Replace bulb

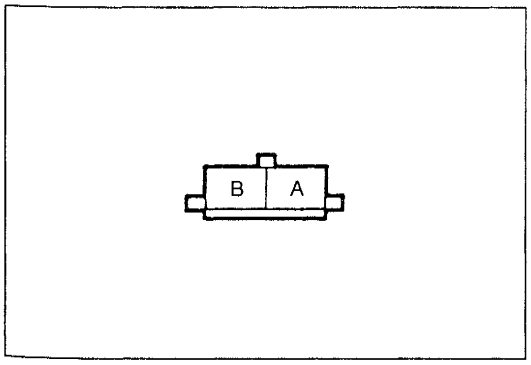

Step 2
1. Turn the headlight switch on (first position).
2. Measure the voltage at terminal A (O) of the licence plate light connector.

B+: Battery positive voltage

Voltage	Action
B+	Repair wiring harness (Licence plate light—GND)
Other	Repair wiring harness (TNS relay—Licence plate light)

Flowchart No.3	Symptom	Taillights do not illuminate

Possible cause
- Burnt light bulb
- Open or short circuit in wiring harness
- Poor connection of connector

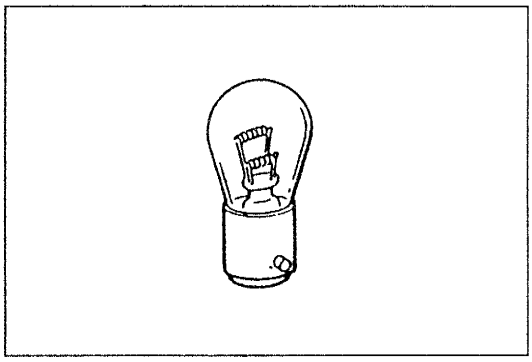

Step 1
Remove and check the taillight bulbs.
(Refer to pages E–50, E–52)

Bulb	Action
OK	Go to Step 2
Burnt	Replace bulb

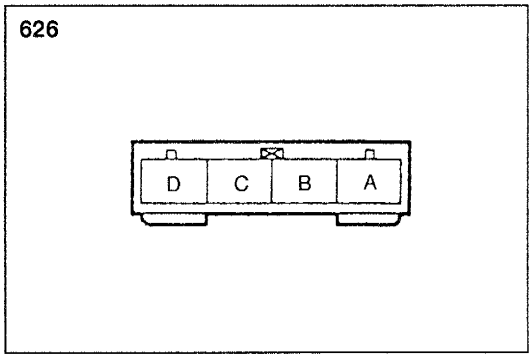

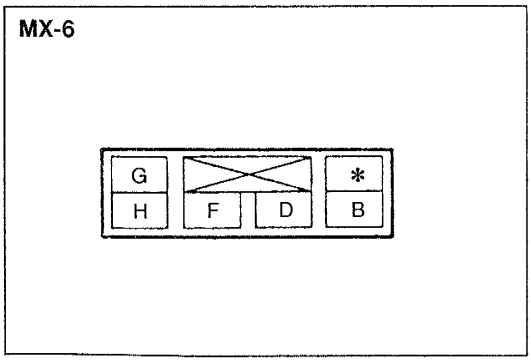

Step 2
1. Turn the headlight switch on (first position).
2. Measure the voltage at terminal B (O) [626] or D (O) [MX-6] of the rear combination light connector.

B+: Battery positive voltage

Voltage	Action
B+	Repair wiring harness (Rear combination light—GND) and go to Step 3 (626)
Other	Repair wiring harness (TNS relay—Rear combination light) and go to Step 3 (626)

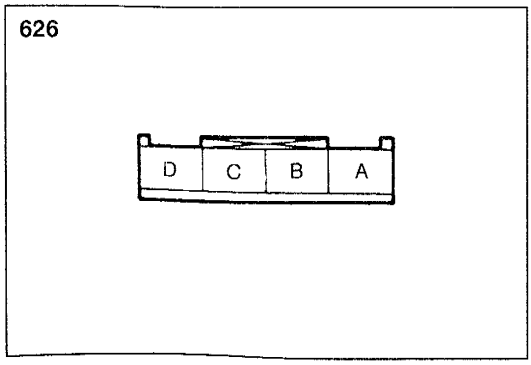

Step 3
Measure the voltage at terminal C (O) of the inboard combination light connector.

B+: Battery positive voltage

Voltage	Action
B+	Repair wiring harness (Inboard combination light—GND)
Other	Repair wiring harness (TNS relay—Inboard combination light)

Flowchart No.4	Symptom	Parking lights do not illuminate

Possible cause
- Burnt light bulb
- Open or short circuit in wiring harness
- Poor connection of connector

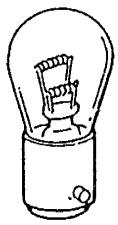

Step 1
Remove and check the parking light bulbs.
(Refer to pages E–47, E–48)

Bulb	Action
OK	Go to Step 2 (626) or 3 (MX-6)
Burnt	Replace bulb

626

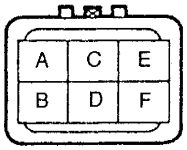

Step 2
1. Disconnect the headlight connector.
2. Turn the headlight switch on (first position).
3. Measure the voltage at terminal F (O) of the headlight connector.

B+: Battery positive voltage

Voltage	Action
B+	Repair wiring harness (Headlight—GND)
Other	Repair wiring harness (TNS relay—Headlight)

MX-6

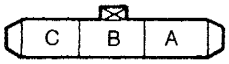

Step 3
1. Disconnect the front combination light connector.
2. Turn the headlight switch on (first position).
3. Measure the voltage at terminal A (O) of the front combination light connector.

B+: Battery positive voltage

Voltage	Action
B+	Repair wiring harness (Front combination light—GND)
Other	Repair wiring harness (TNS relay—Front combination light)

Flowchart No.5	Symptom	Front and rear side marker lights do not illuminate

Possible cause
- Burnt light bulb
- Open or short circuit in wiring harness
- Poor connector of connector

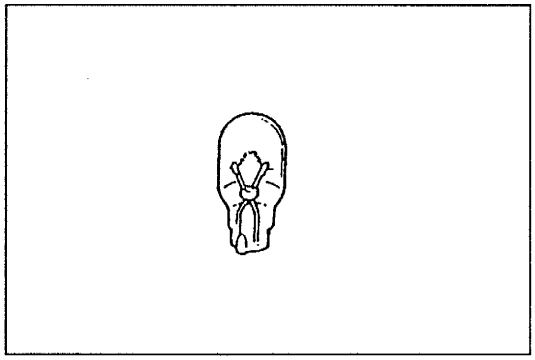

Step 1
Remove and check the side marker light bulbs.
(Refer to page E–53.)

Bulb	Action
OK	Go to Step 2
Burnt	Replace bulb

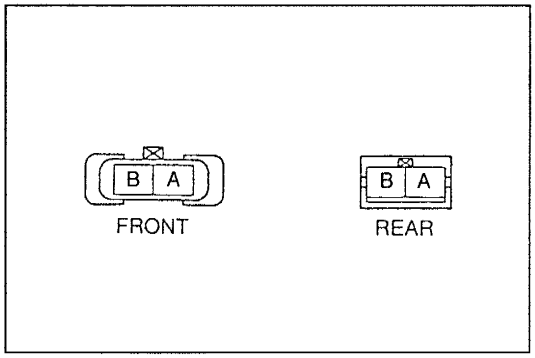

Step 2
1. Disconnect the front side marker light or rear side marker light connector.
2. Turn the headlight switch on (first position).
3. Measure the voltage at terminals A (O) and B (O) of the side marker light connector.

B+: Battery positive voltage

	Terminal	Voltage	Action
Front	A	B+	Repair wiring harness (Front side marker light—GND)
		Other	Repair wiring harness (TNS relay—Front side marker light)
Rear	B	B+	Repair wiring harness (Rear side maker light—GND)
		Other	Repair wiring harness (TNS relay—Rear side marker light)

AIMING

Use the vertical–horizontal aiming method for normal headlight aim adjustment. If the vehicle has been damaged in a collision, restore the headlights to their correct position before aiming them. Refer to the 1993 626/MX-6 Bodyshop Manual (No.3212-10-92A) for repair specifications.

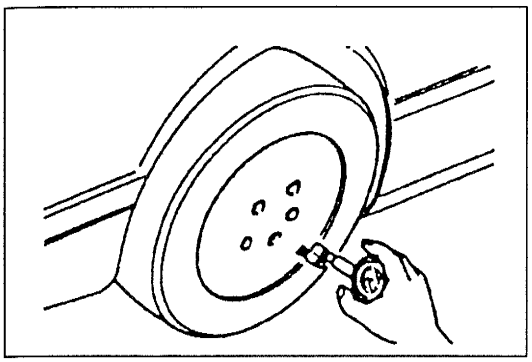

Vertical–horizontal Aiming Method
626

1. Measure the tire air pressure when the tire is cold. Adjust the pressure to specification, if necessary.

   Air pressure
   Front: 216 kPa {2.2 kgf/cm², 31 psi}
   Rear: 177 kPa {1.8 kgf/cm², 26 psi}

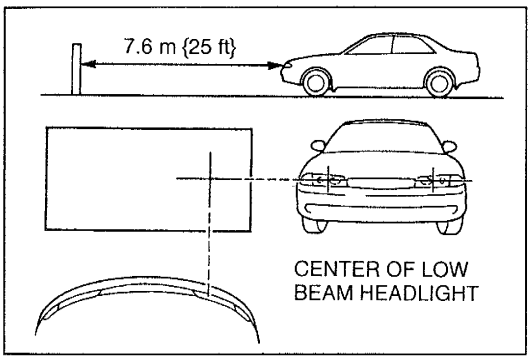

2. Fill the fuel tank and remove excess cargo.
3. Position the unloaded vehicle on a flat level surface.
4. Position the vehicle straight ahead to the headlight tester. Set the distance between the headlight and the tester to 7.6 m {25 ft}.
5. Disconnect the connector of the other headlight.

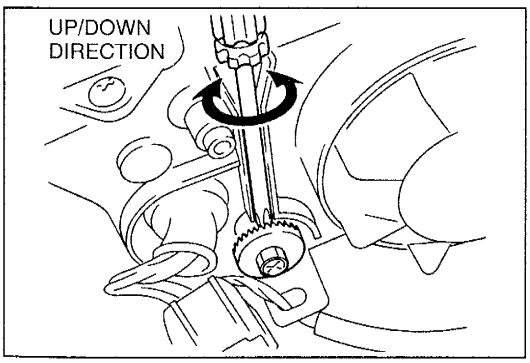

6. Adjust the up/down position of the headlight by using the vertical aiming gauge. Make sure the bubble in the gauge is within two lines on either side of the center "0".

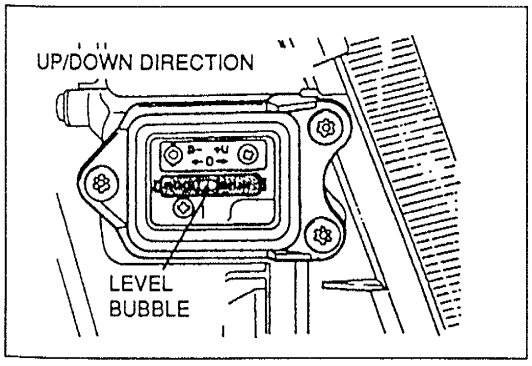

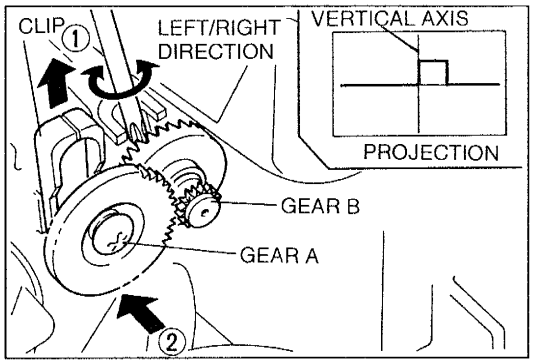

7. Pull up the clip.
8. Push gear A toward the front of the vehicle until gears A and B disengage.
9. Turn the headlights on at low beam.
10. By using a screwdriver, turn gear B to carry out horizontal aiming. The left edge of the figure projected on the tester screen must be aligned with the vertical axis as shown.

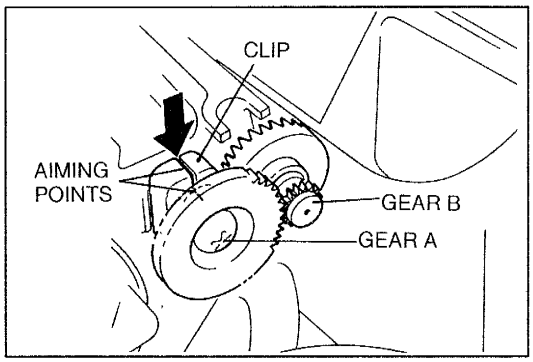

11. Turn gear A to align the aiming points.
12. Push the clip down until gears A and B engage.
13. Do this procedure for both RH and LH headlights.

Note
- When the headlights are correctly adjusted by following the above steps, simplified aiming by just turning gear B to align aiming points

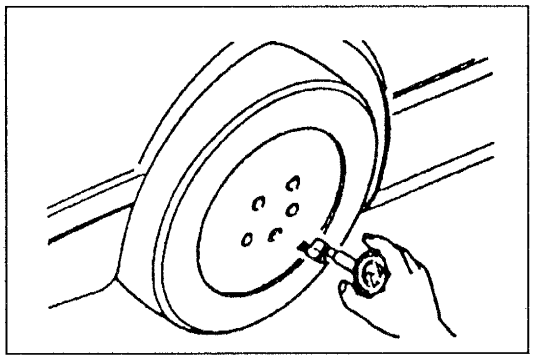

MX-6

1. Measure the tire air pressure when the tire is cold. Adjust the pressure to specification, if necessary.

   Air pressure
   Front: 216 kPa {2.2 kgf/cm², 31 psi}
   Rear: 177 kPa {1.8 kgf/cm², 26 psi}

2. Position the unloaded vehicle on a flat, level surface.

LEFT/RIGHT AIMING

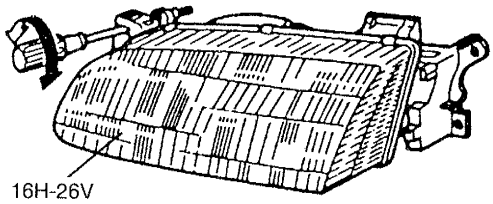

3. Turn the adjusting screws as shown in the figure to adjust the headlights. Use a "HOPPY" brand aimer or equivalent to aim the headlights to specification numbers 16H–26V (found on the headlight lens).

UP/DOWN AIMING

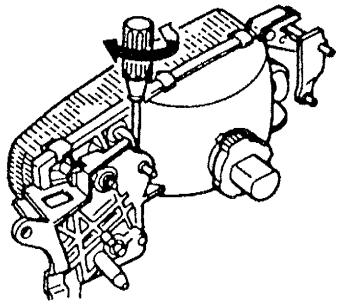

HEADLIGHT AND FRONT COMBINATION LIGHT

Removal / Installation

1. Remove in the order shown in the figure.
2. Install in the reverse order of removal.

626

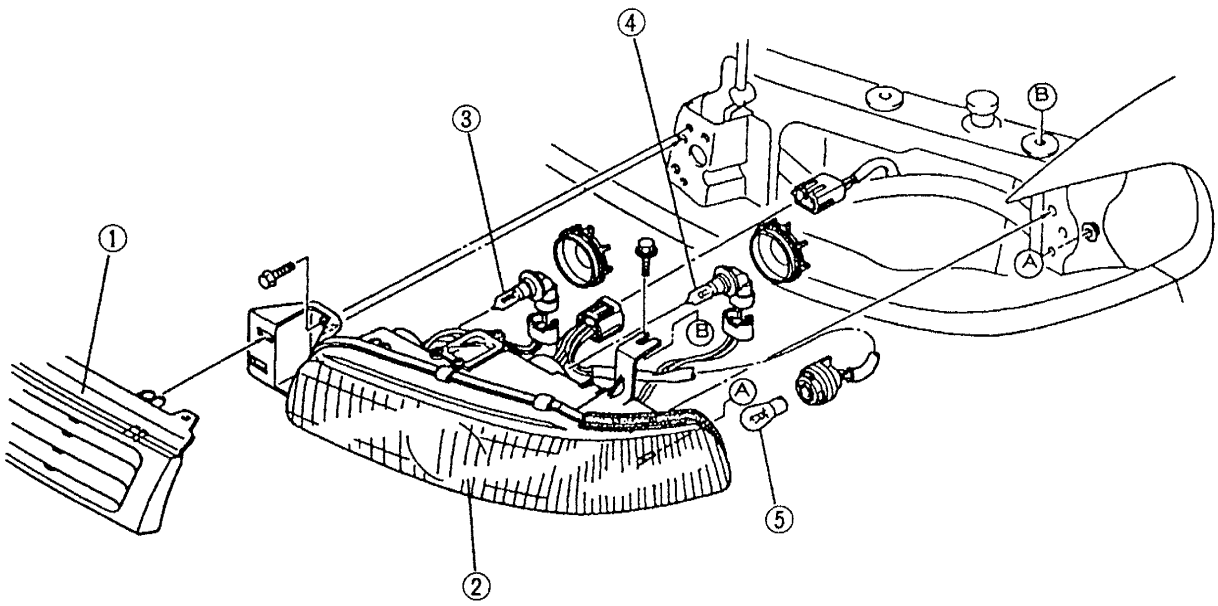

1. Radiator grille
   Removal / Installation.....1996 626/MX-6 Workshop Manual, section S
2. Headlight
   Aiming..... page E–45
3. Bulb (high beam) **60W (9005)**
4. Bulb (high/low beam) **51W (9006)**
5. Bulb (front turn and hazard warning light/parking light) **27/8W (1157NA)**

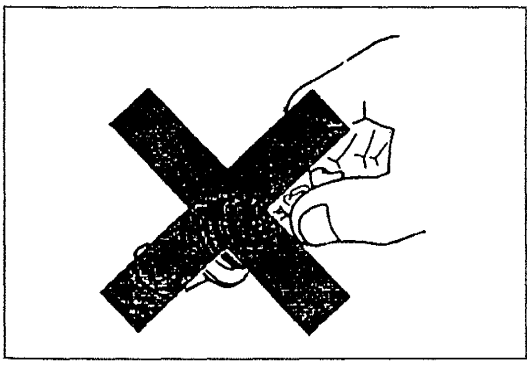

Warning

- **If the glass surface of a halogen bulb is touched with bare hands, natural body oil could cause the bulb to overheat when it is lit. Because a halogen bulb contains pressurized gas, this overheating will cause the bulb to burst. The flying glass may seriously injure you. Hold the metal flange, not the glass, when replacing the bulb.**

MX-6

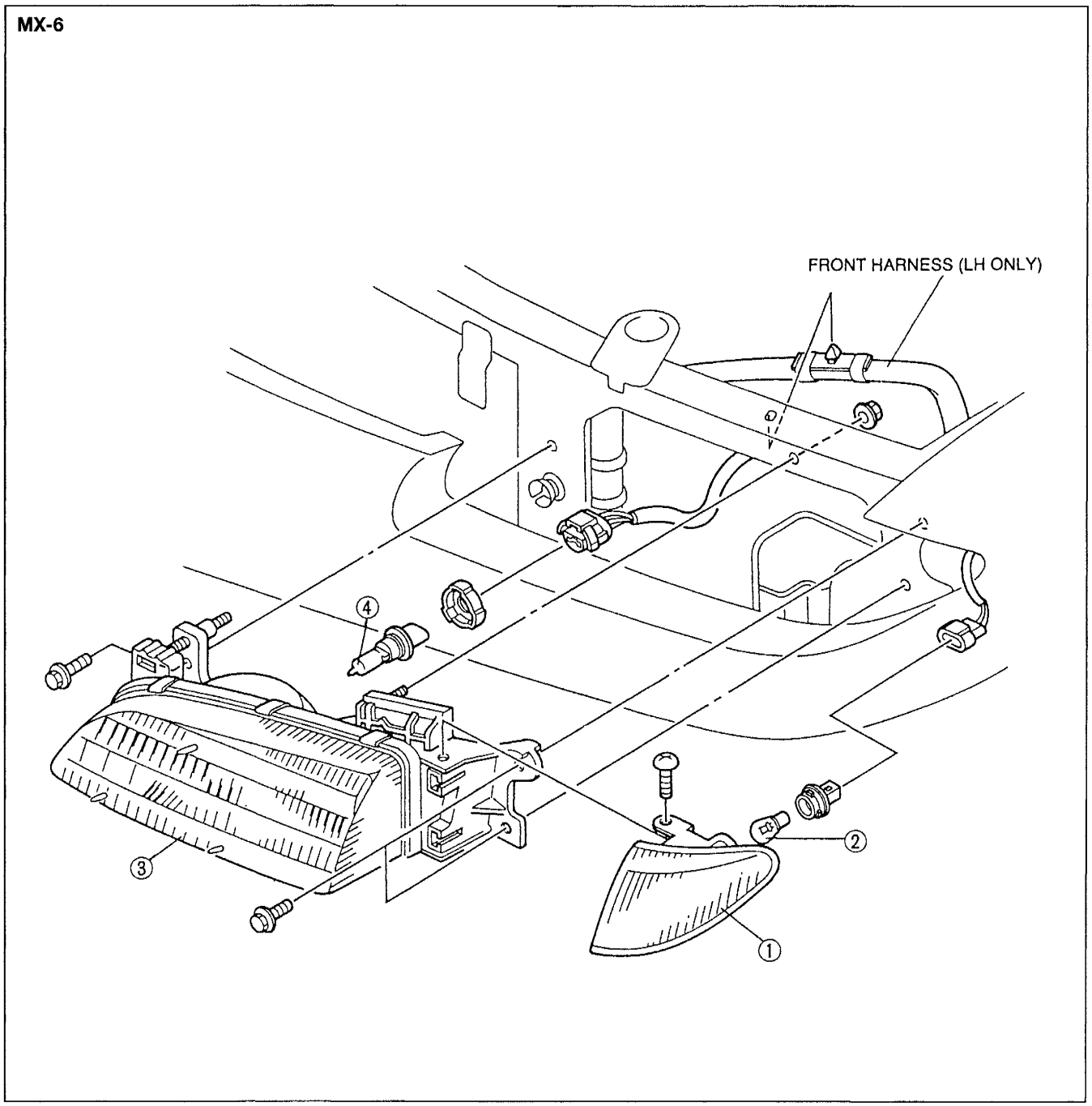

1. Front combination light
2. Bulb (front turn and hazard warning light/parking light) **27/8W (1157NA)**
3. Headlight
   Aiming..... page E–46
4. Bulb (high/low beam) **65/45W (9004)**

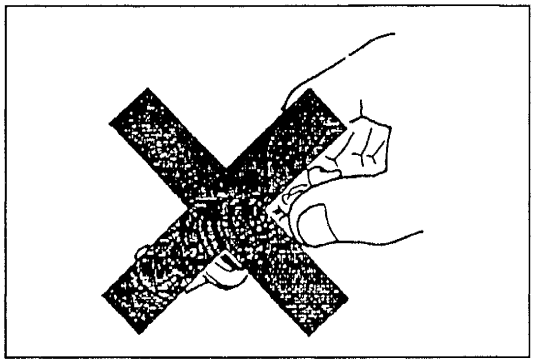

Warning

- **If the glass surface of a halogen bulb is touched with bare hands, natural body oil could cause the bulb to overheat when it is lit. Because a halogen bulb contains pressurized gas, this overheating will cause the bulb to burst. The flying glass may seriously injure you. Hold the metal flange, not the glass, when replacing the bulb.**

FRONT FOG LIGHT

Removal / Installation

1. Remove in the order shown in the figure.
2. Install in the reverse order of removal.

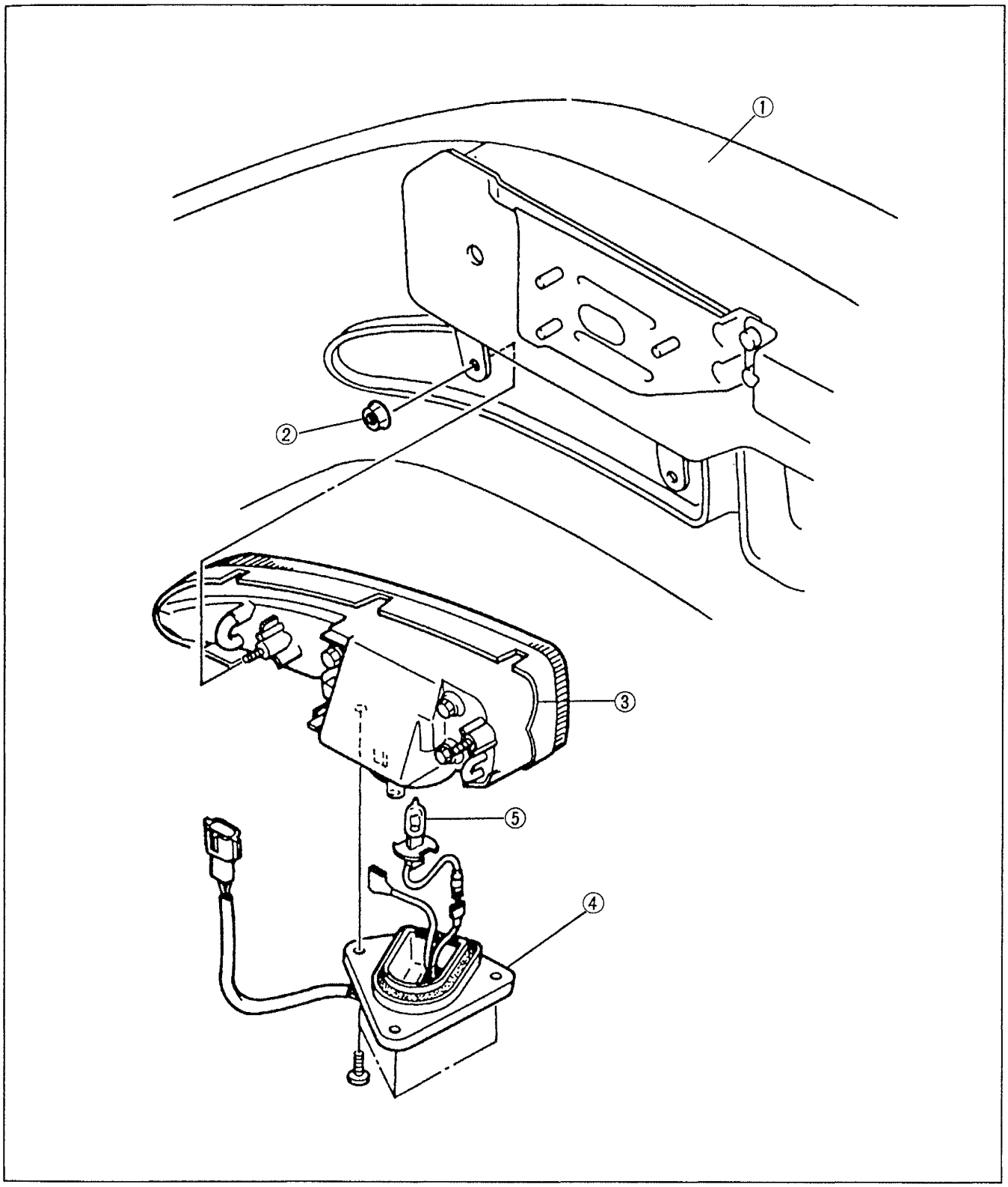

1. Front bumper
   Removal/Installation.....1996 626/MX-6 Workshop Manual, section S
2. Nut
3. Front fog light
4. Cover
5. Bulb **35W**

REAR COMBINATION LIGHT

Removal / Installation

1. Remove in the order shown in the figure.
2. Install in the reverse order of removal.

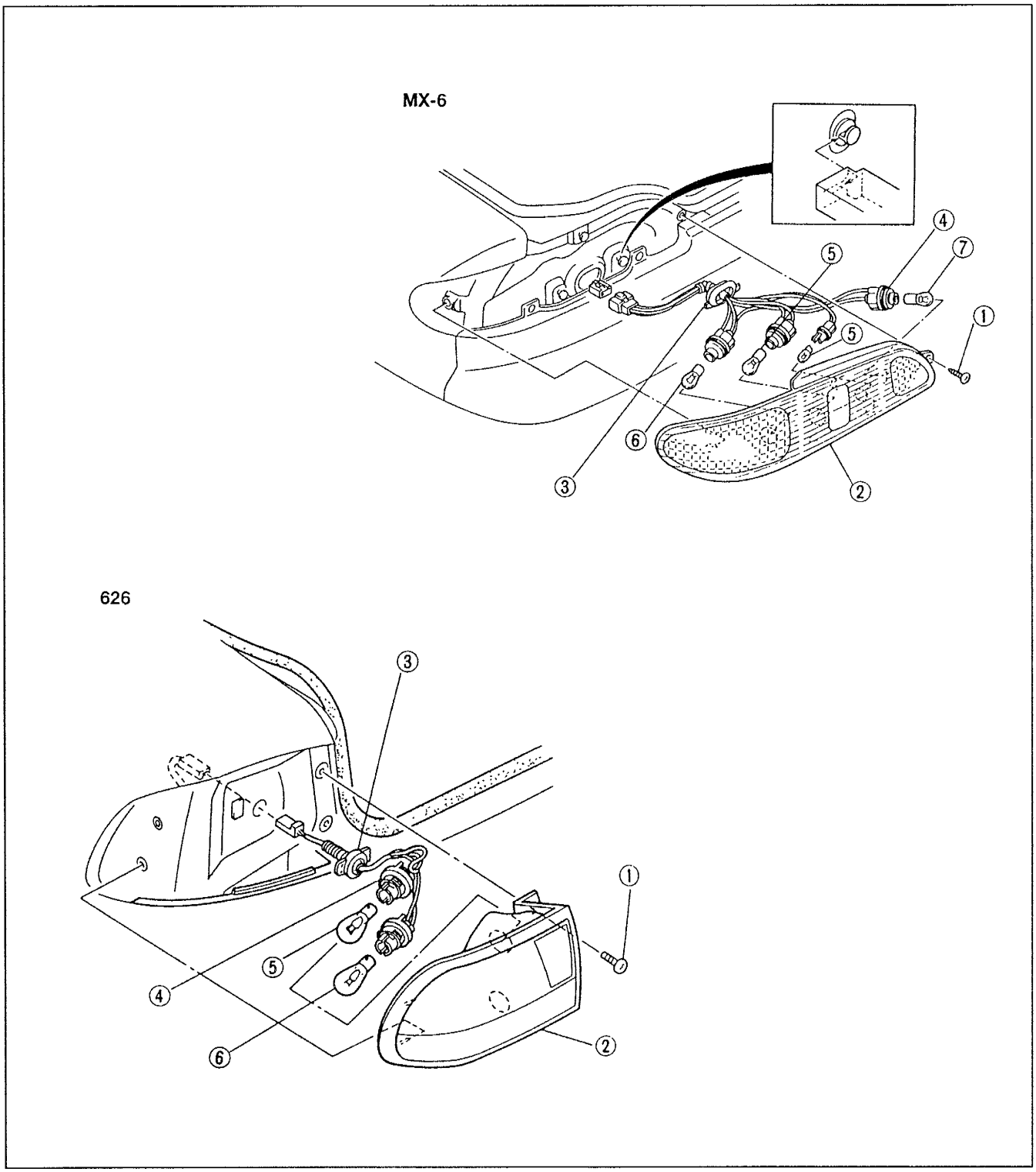

1. Screw
2. Rear combination light
   Disassembly ..... page E–51
   Assembly ..... page E–51
3. Grommet
4. Socket
5. Bulb (brake light/taillight)
   27/8W (1157)
6. Bulb (rear turn and hazard warning light)
   27W (1156)
7. Bulb (back-up light)
   27W (1156)

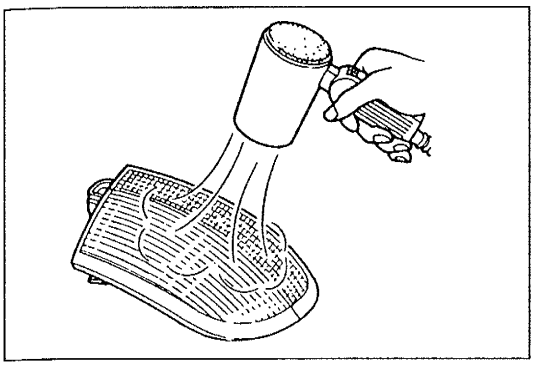

Disassembly

1. Use a hot-air blower to soften the "hot melt" (bonding agent) around the lens.

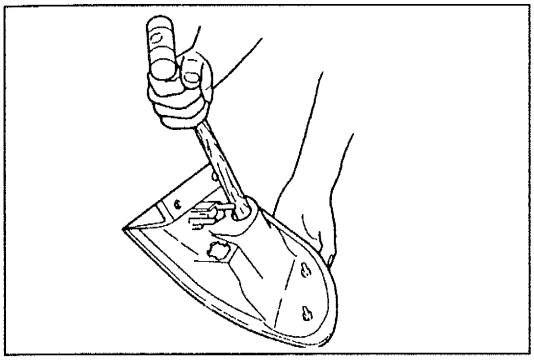

2. Remove the lens from the light housing by pushing the rear of the lens with a hammer handle or round bar.

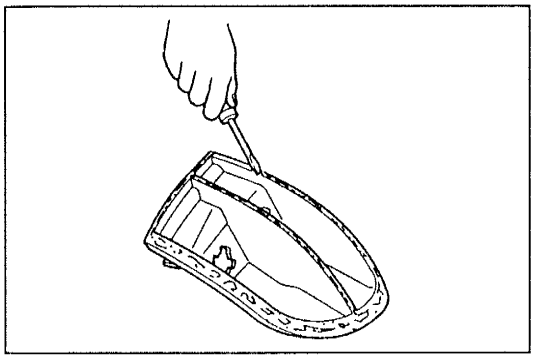

3. Remove the old hot melt from the light housing.

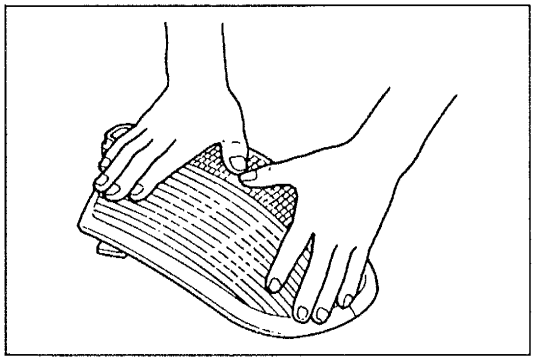

Assembly

1. If new hot melt is used, put **Uni-sealer** (8531 77 739) adhesive in the light housing groove.
2. Fit the new lens onto the light housing. Press the lens firmly so that it will adhere.

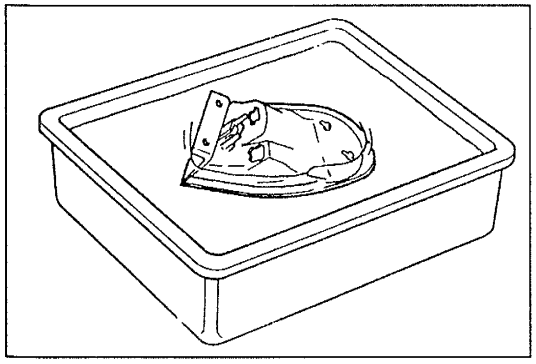

3. Allow the sealer to dry for about one hour.
4. Immerse the combination light in water to check for leaks.

INBOARD COMBINATION LIGHT

Removal / Installation

1. Remove the trunk lid trim.
   (Refer to the 1996 626/MX-6 Workshop Manual, section S.)
2. Remove in the order shown in the figure.
3. Install in the reverse order of removal.

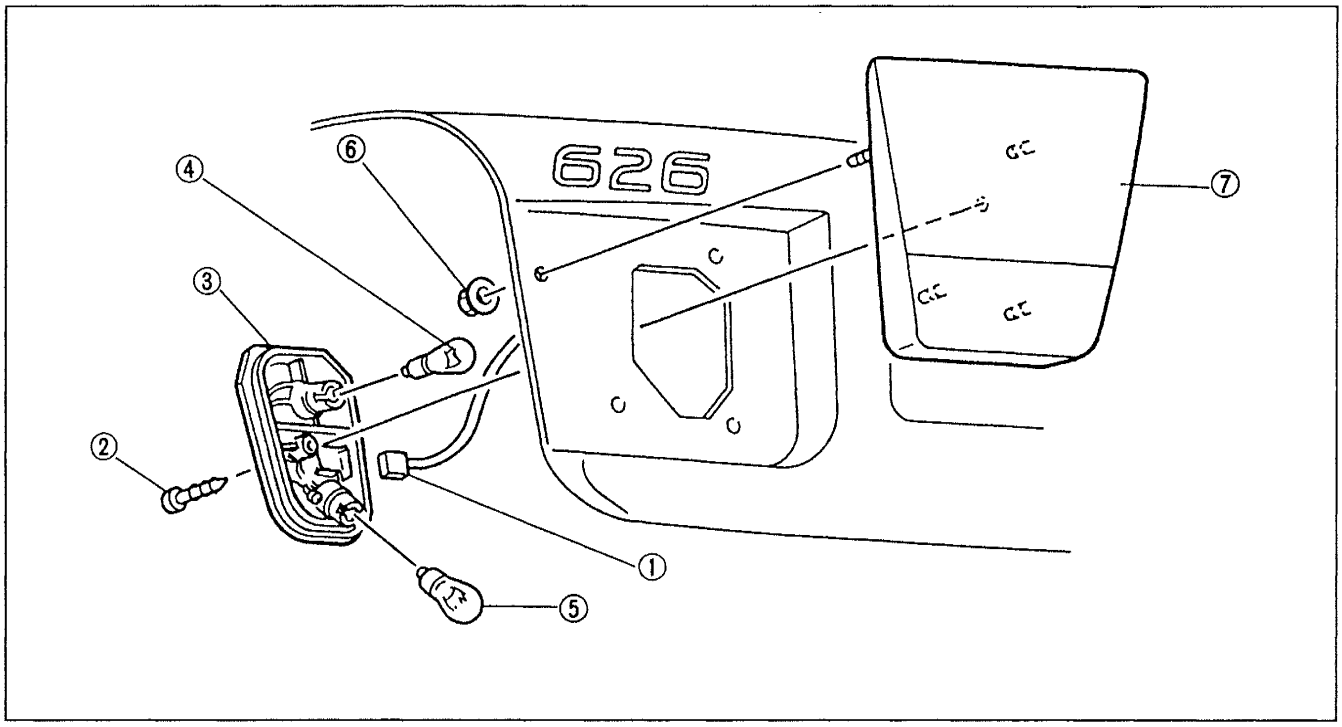

1. Inboard combination light connector
2. Screw
3. Cover
4. Bulb (brake light/taillight)
   27/8W (1157)
5. Bulb (back-up light)
   27W (1156)
6. Nut
7. Inboard combination light

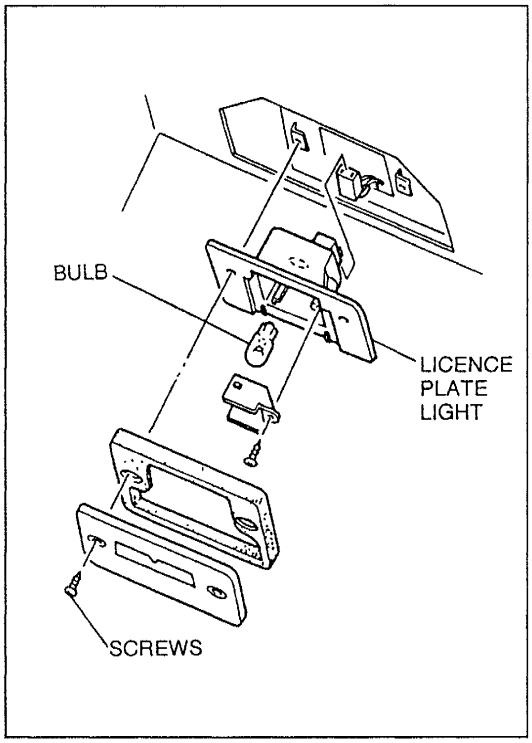

LICENCE PLATE LIGHT

Remove / Installation

(626)

1. Remove the screws.
2. Remove the licence plate light.
3. Remove the bulb.
4. Install in the reverse order of removal.

Bulb: 5W

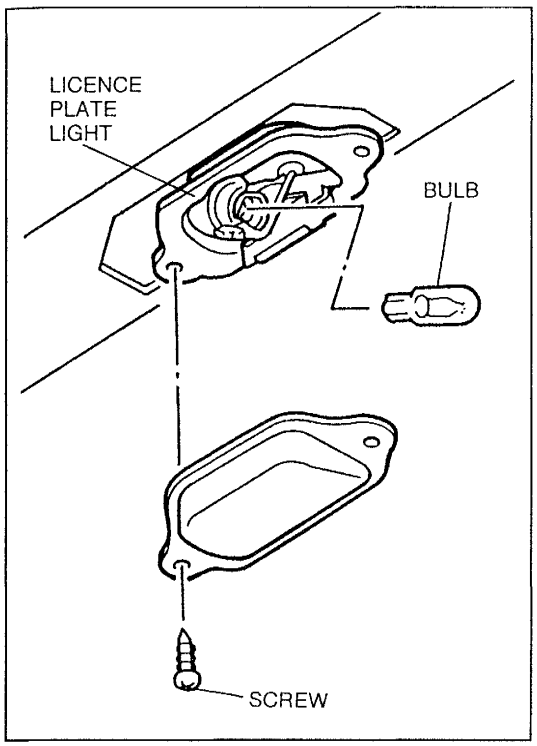

(MX-6)
1. Remove the screws.
2. Remove the licence plate light.
3. Remove the bulb.
4. Install in the reverse order of removal.

Bulb: 4.9W (168)

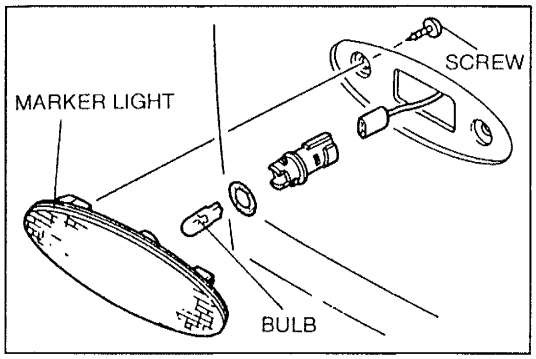

FRONT SIDE MARKER LIGHT/
REAR SIDE MARKER LIGHT
Removal / Installation
1. Remove the mud guard.
2. Remove the screws.
3. Remove the marker light.
4. Remove the bulb.
5. Install in the reverse order of removal.

Bulb: 3.8W (194)

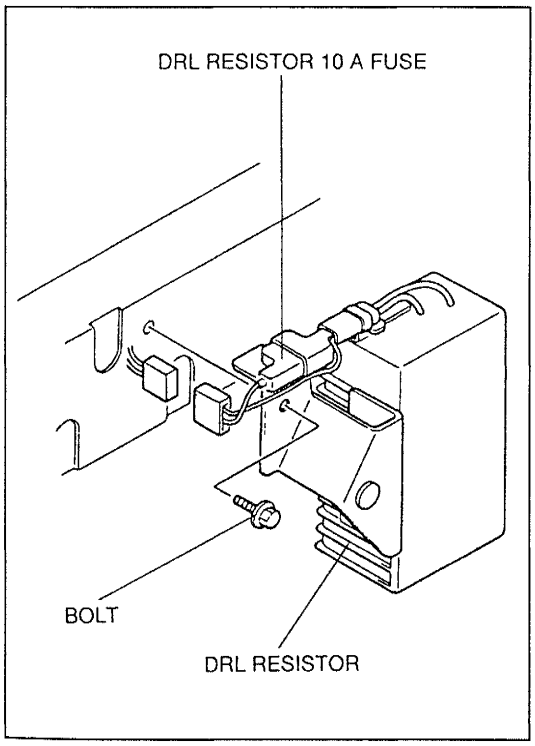

DRL RESISTOR [CANADA]
Removal / Installation
1. Remove the bolt.
2. Remove the DRL resistor.
3. Install in the reverse order of removal.

Inspection
1. Check the DRL resistor 10A fuse. If the fuse is burnt, replace it.
2. Measure the resistance between the resistor terminals.

Resistance: 0.3Ω

3. If not as specified, replace the DRL resistor.

Before beginning any service procedure, refer to section S of this manual for air bag system service warnings.

SIGNAL LIGHTING SYSTEM

SIGNAL LIGHTING SYSTEM

STRUCTURAL VIEW
Front View

626

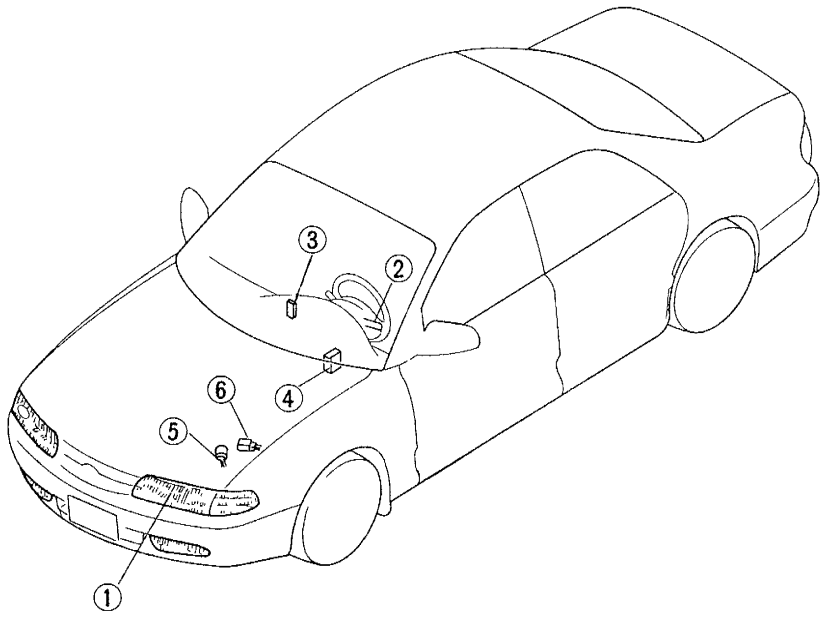

MX-6

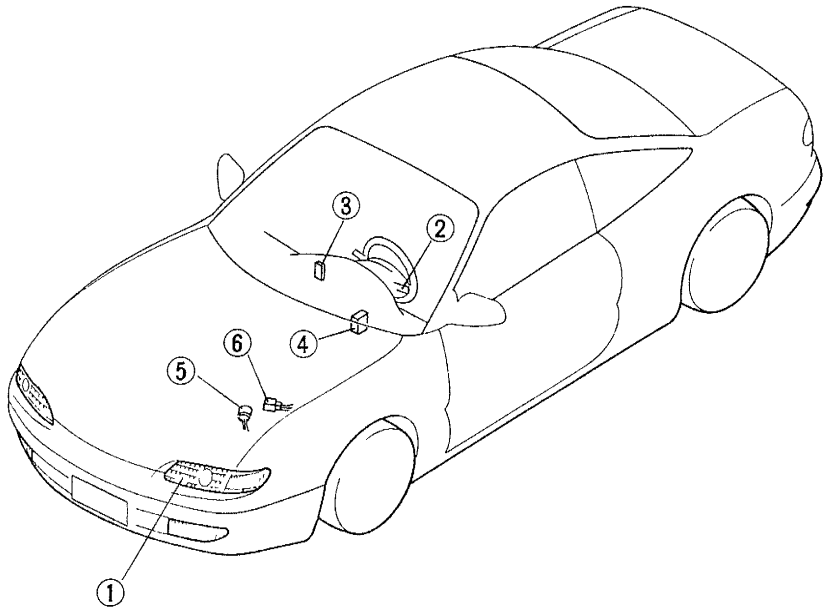

1. Front combination light
   Removal / Installation ..... section E
   Turn and hazard warning light
   27/8W (1157 NA)
   Troubleshooting ..... page F–5
2. Turn switch (combination switch)
   Removal / Installation ..... section Z4
   Inspection ..... page F–32
3. Hazard warning switch
   Removal / Installation ..... section Z4
   Inspection ..... page F–32
4. Flasher unit
   Inspection ..... page F–33
5. Back-up light switch (MTX)
   Inspection ..... page F–33

Rear View

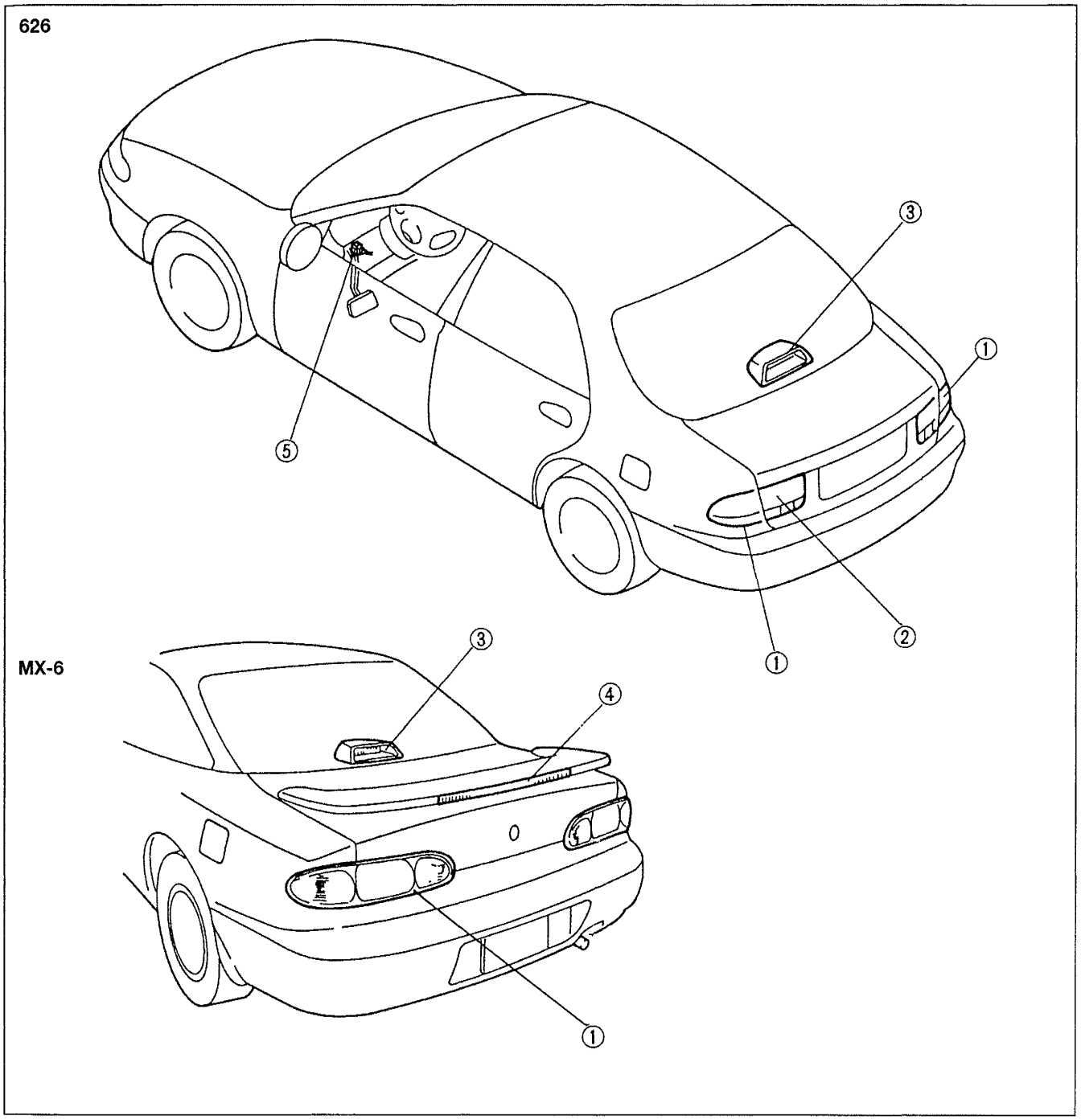

1. Rear combination light
   Removal / Installation ..... section E
   (1) Turn and hazard warning light **27W (1156 NA)**
   Troubleshooting ..... page F– 5
   (2) Brake light / taillight **27/8W (1157)**
   Troubleshooting ..... page F–17
2. Inboard combination light
   Removal / Installation ..... section E
   (1) Brake light / taillight **27/8W (1157)**
   Troubleshooting ..... page F–17
   (2) Back-up light **27W (1156)**
   Troubleshooting ..... page F–24
3. High-mount brake light **18.4W (921)**
   Removal / Installation ..... page F–34
   Troubleshooting ..... page F–17
4. High-mount brake light **8.1W**
   (MX-6 with rear spoiler)
   Removal / Installation ..... page F–34
   Troubleshooting ..... page F–17

SYSTEM DIAGRAM
Turn and Hazard Warning Light

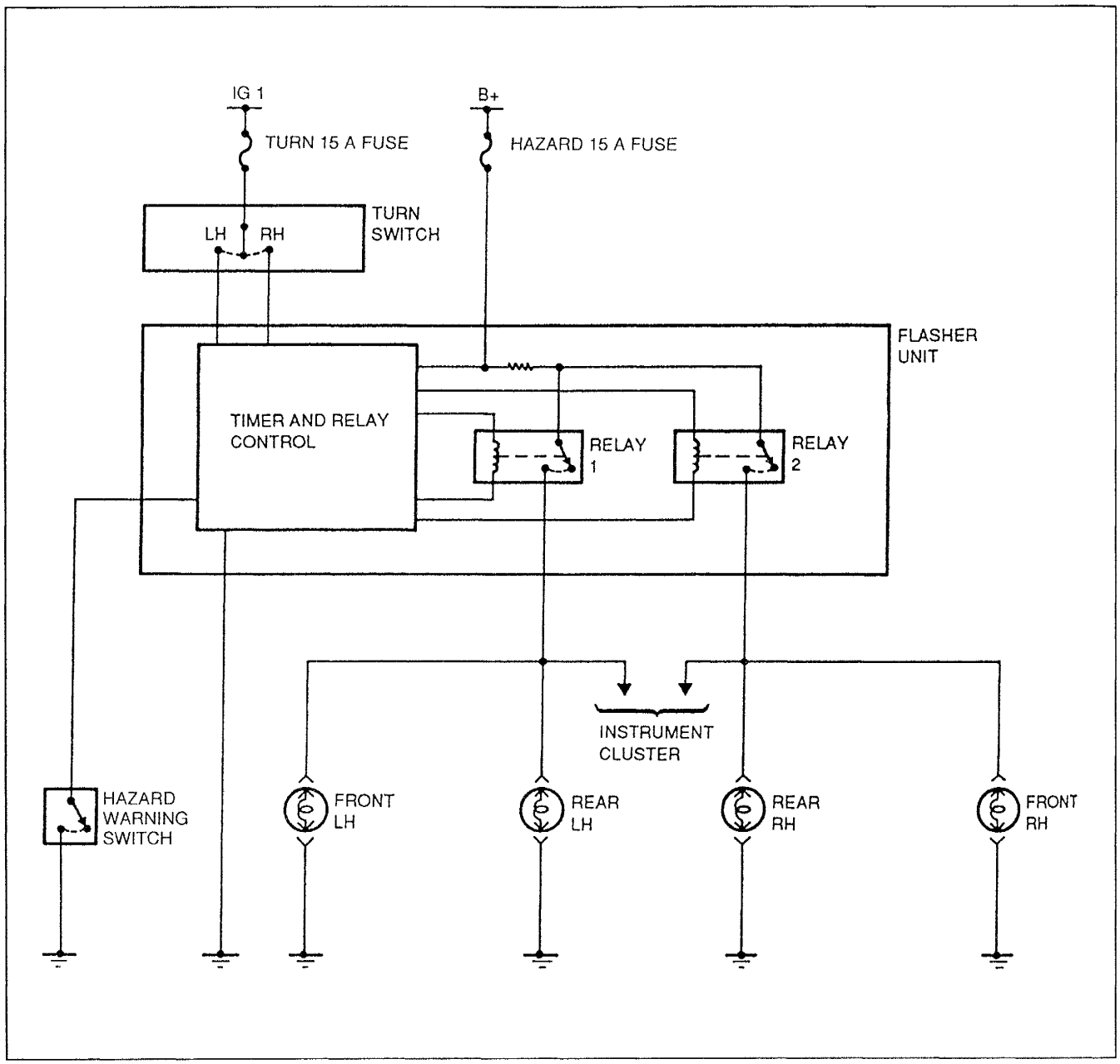

Description
The signal lighting system consists of the following components:
- Turn and hazard warning lights in the front combination light
- Turn and hazard warning lights in the rear combination light
- Turn switch in the combination switch
- Hazard warning switch
- Flasher unit

Operation
1. Turn signal lights

When the turn switch is set to the left (right) position with the ignition switch at ON, relay 1 (relay 2) in the flasher unit closes, turning on the left (right) turn signal lights.

2. Hazard lights

When the hazard warning switch is turned on with the ignition switch at any position, relays 1 and 2 in the flasher unit close, turning on the hazard lights.

TROUBLESHOOTING
Turn and Hazard Warning Lights
Circuit diagram

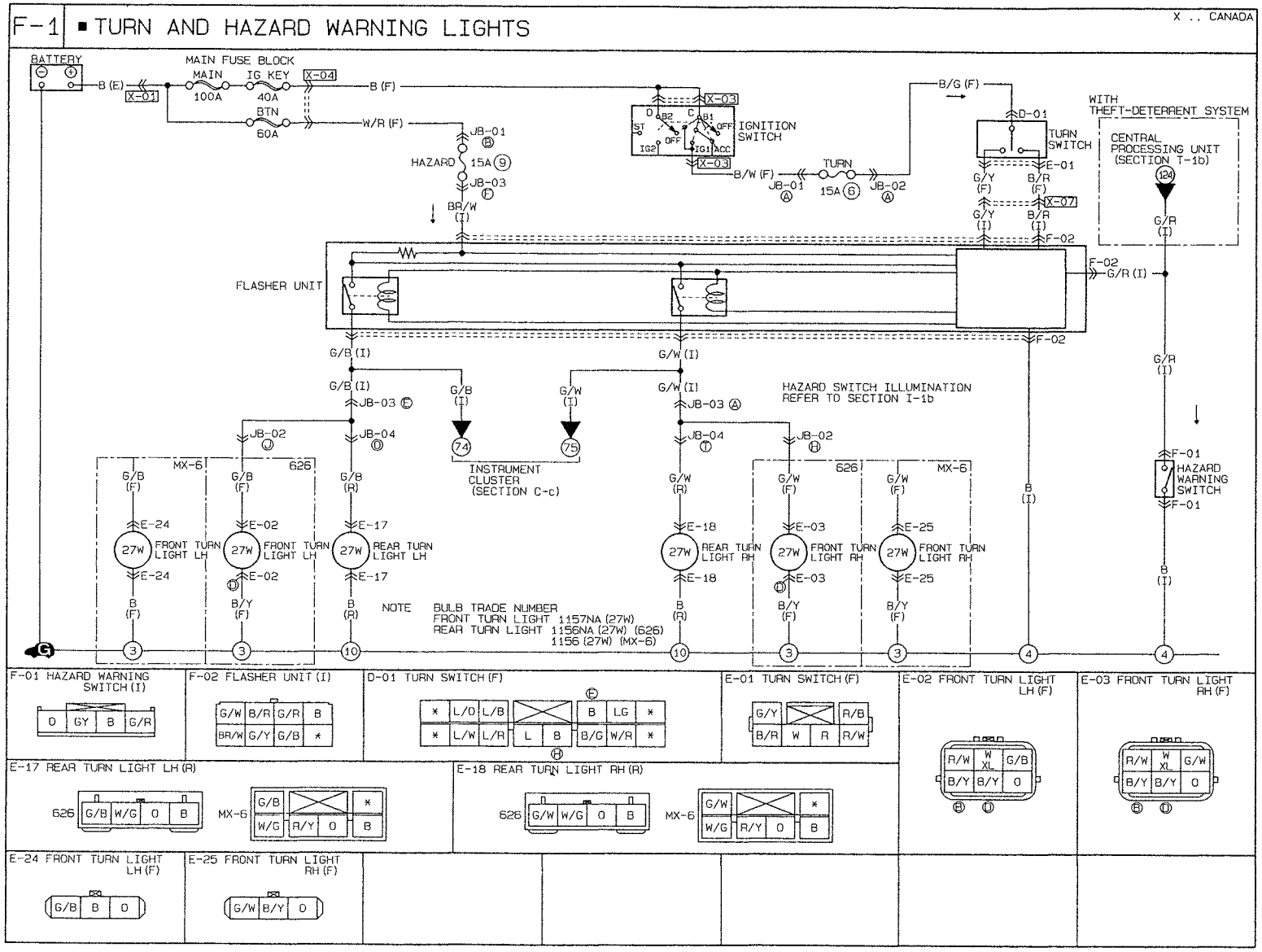

Connector location

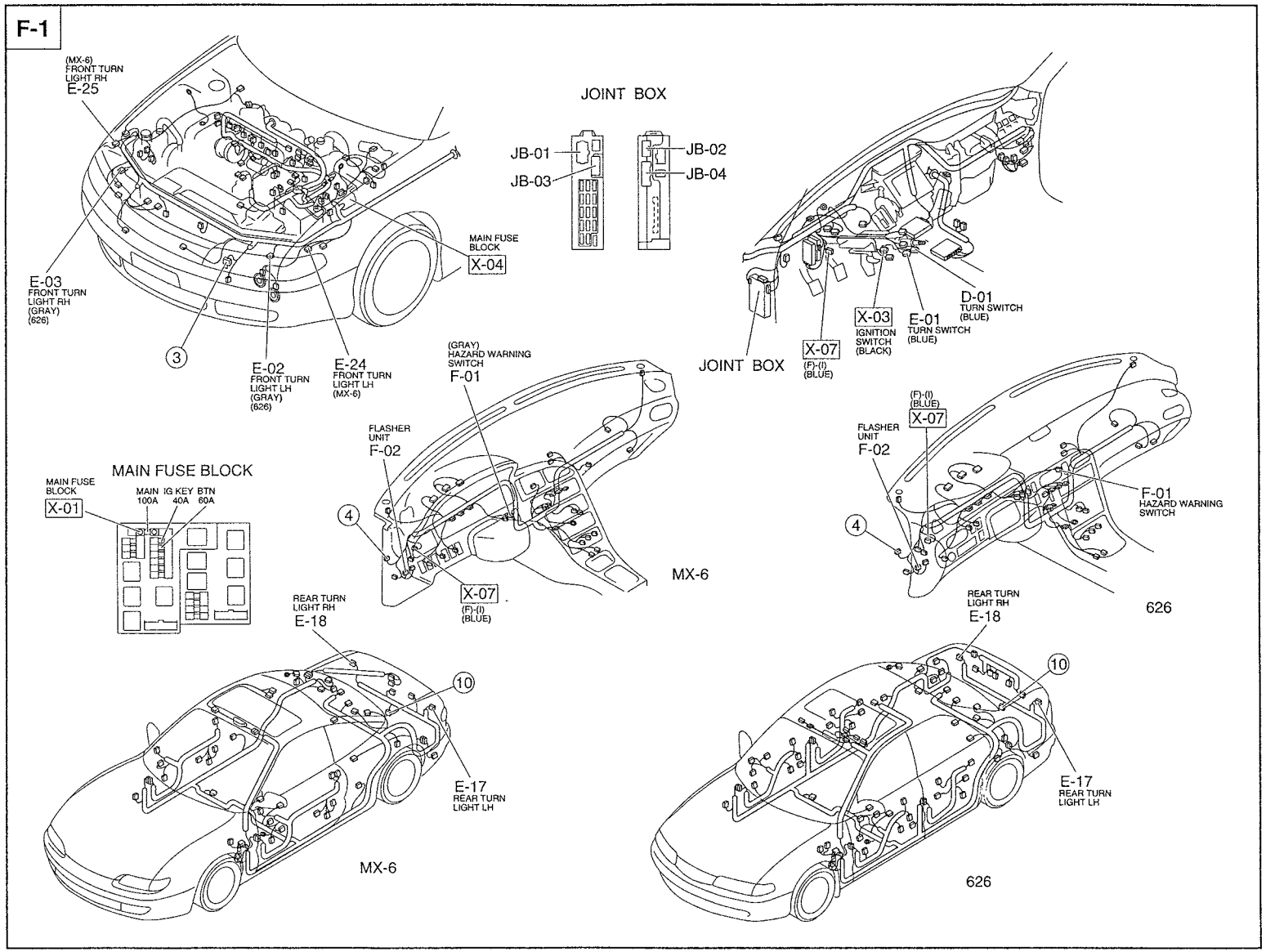

Checklist

Procedure / Proper operation	Symptom	Flowchart No.
1. Turn ignition switch to ON. 2. Set turn switch to right turn and verify that right turn signal lights flash. 3. Set turn switch to left turn and verify that left turn signal lights flash. 4. Turn hazard warning switch on and verify that all turn signal lights flash simultaneously.	Turn and hazard warning functions do not operate	1
	Turn signal function does not operate (hazard light function operates)	2
	Hazard light function does not operate (turn signal function operates)	3
	Left or right turn signal function does not operate (hazard light function operates)	4
	Left or right turn signal function and hazard light function do not operate	5

Flowchart No.1	Symptom	Turn and hazard warning functions do not operate

Possible cause
- Burnt HAZARD 15A or TURN 15A fuse
- Damaged flasher unit
- Damaged combination switch
- Damaged hazard warning switch
- Burnt light bulbs
- Open or short circuit in wiring harness
- Poor connection of connector

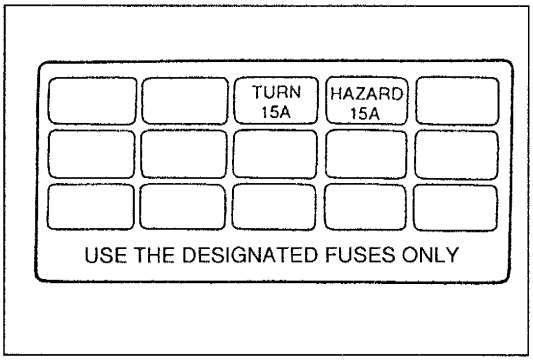

Step 1
Check the HAZARD 15A and TURN 15A fuses in tl fuse block.

Fuse	Action
OK	Go to Step 2
Burnt	Replace fuse after checking and repairing wiring harness

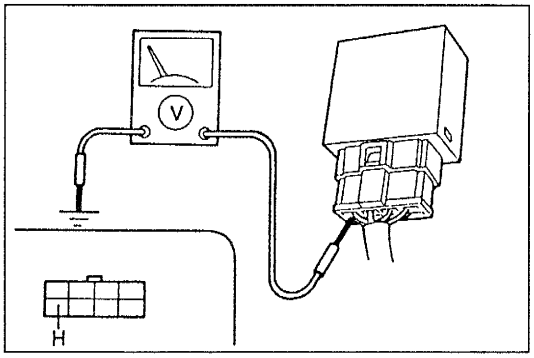

Step 2
Measure the voltage at terminal H (BR/W) of the flash unit connector.

B+: Battery positive volta

Voltage	Action
B+	Go to Step 3
Other	Repair wiring harness (HAZARD 15A fuse—Flasher unit)

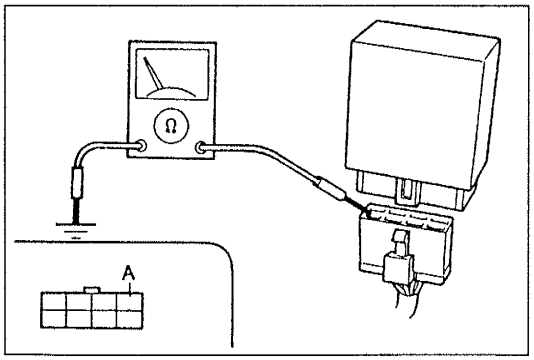

Step 3
1. Disconnect the flasher unit connector.
2. Check for continuity between terminal A (B) of the flas er unit connector and ground.

Continuity	Action
Yes	Reconnect connector and go to Step 4
No	Repair wiring harness (Flasher unit—GND)

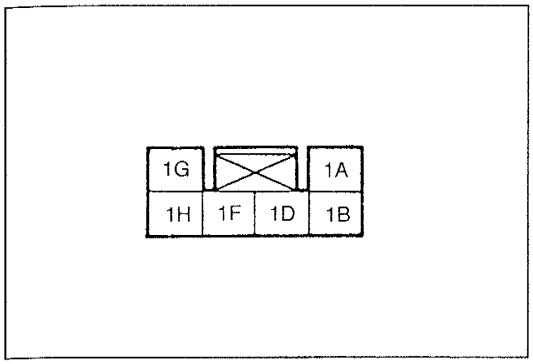

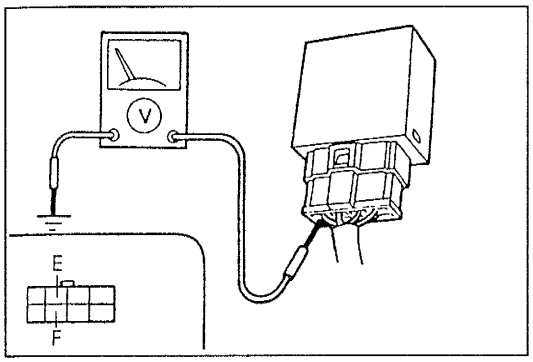

Step 4

1. Remove the column cover.
   (Refer to the 1996 626/MX-6 Workshop Manual, section S.)
2. Turn the ignition switch to ON.
3. Turn the turn switch on (left or right).
4. Measure the voltage at terminal 1G (G/Y) or 1H (B/R) of the combination switch connector.

B+: Battery positive voltage

Terminal	Voltage	Action
1G	B+	Turn ignition switch to LOCK, turn switch off and go to Step 5
	Other	Inspect turn switch (Combination switch) (Refer to page F–32)
1H	B+	Turn ignition switch to LOCK, turn switch off and go to Step 6
	Other	Inspect turn switch (Combination switch) (Refer to page F–32)

Step 5

Set the turn switch to the left position and measure the voltage at terminal F (G/Y) of the flasher unit connector.

B+: Battery positive voltage

Voltage	Action
B+	Turn ignition switch to LOCK and go to Step 7
Other	Repair wiring harness (Combination switch—Flasher unit)

Step 6

Set the turn switch to the right position and measure the voltage at terminal E (B/R) of the flasher unit connector.

B+: Battery positive voltage

Voltage	Action
B+	Turn ignition switch to LOCK and go to Step 7
Other	Repair wiring harness (Combination switch—Flasher unit)

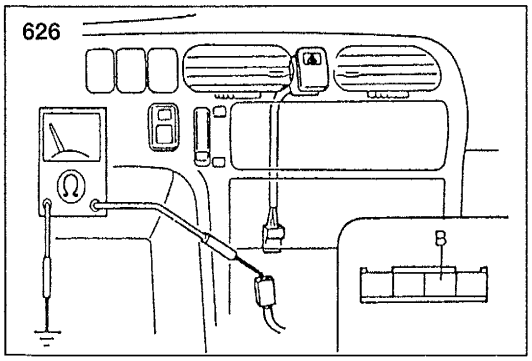

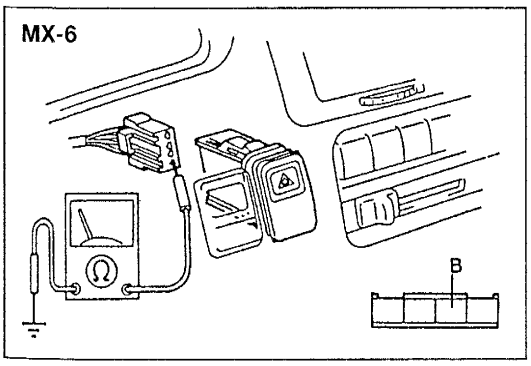

Step 7

1. Remove the hazard warning switch.
   (Refer to section Z4.)
2. Check for continuity between terminal B (B) of the hazard warning switch connector and ground.

Continuity	Action
Yes	Go to Step 8
No	Repair wiring harness (Hazard warning switch—GND)

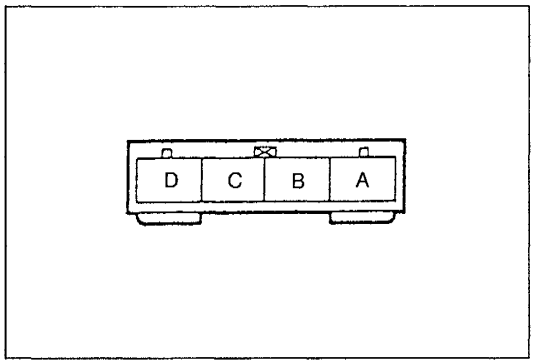

Step 8

1. Check for continuity between the terminals of the hazard warning switch.

○—○ : Continuity ○—ⓑ—○ : Bulb

Terminal / Switch position	A	B	C	D
OFF			○—ⓑ—○	
ON	○———○		○—ⓑ—○	

2. If correct, reconnect the connector and go to Step 9.
3. If not as specified, replace the hazard warning switch.

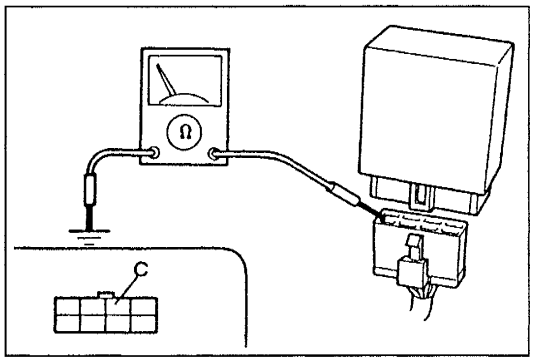

Step 9

1. Turn the hazard warning switch on.
2. Check for continuity between terminal C (G/R) of the flasher unit connector and ground.

Continuity	Action
Yes	Turn hazard warning switch off and go to Step 10
No	Repair wiring harness (Flasher unit—Hazard warning switch)

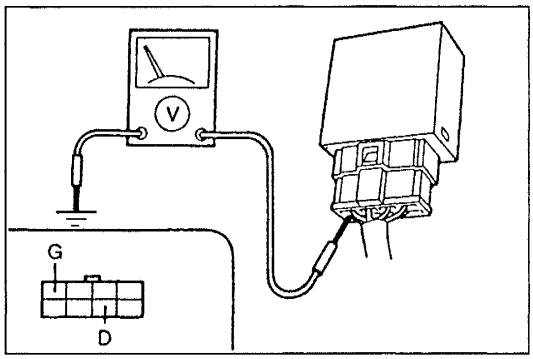

Step 10

1. Reconnect the connector and turn the ignition switch to ON.
2. Set the turn switch to the right position and measure the voltage at terminal G (G/W) of the flasher unit connector.

B+: Battery positive voltage

Voltage	Action
Alternates 0V and B+	Turn ignition switch LOCK and turn switch off, go to Step 11
Other	Replace flasher unit

3. Set the turn switch to the left position and measure the voltage at terminal D (G/B) of the flasher unit connector.

B+: Battery positive voltage

Voltage	Action
Alternates 0V and B+	Turn ignition switch LOCK and turn switch off, go to Step 11
Other	Replace flasher unit

626

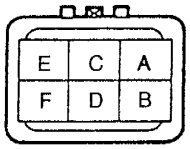

MX-6

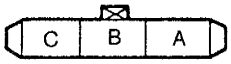

Step 11

1. Remove the front combination light.
   (Refer to section E.)
2. Turn the turn switch on (left or right).
3. Measure the voltage at terminal A (G/B) [626] or C (G/B) [MX-6] of the front combination light connector.

B+: Battery positive voltage

Voltage	Action
Alternates 0V and B+	Turn switch off and go to Step 12
Other	Repair wiring harness (Flasher unit—Front combination light)

626

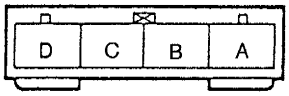

MX-6

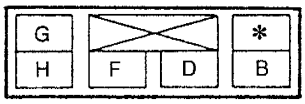

Step 12

1. Remove the trunk end upper trim and lower trim.
   (Refer to the 1996 626/MX-6 Workshop Manual, section S.)
2. Turn the turn switch on (left or right).
3. Measure the voltage at terminal D (G/B) [626] or G (G/B) [MX-6] of the rear combination light connector.

B+: Battery positive voltage

Voltage	Action
Alternates 0V and B+	Turn switch off and go to Step 13
Other	Repair wiring harness (Flasher unit—Rear combination light)

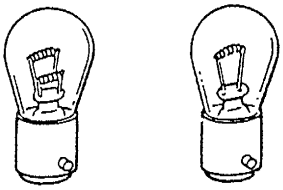

Step 13

1. Turn the ignition switch to LOCK.
2. Remove and check the bulbs.
   (Refer to section E.)

Turn signal light	Bulb	Action
Front	OK	Repair wiring harness (Front combination light—GND)
	Burnt	Replace bulb
Rear	OK	Repair wiring harness (Rear combination light—GND)
	Burnt	Replace bulb

Flowchart No.2	Symptom	Turn signal function does not operate (hazard light function operates)

Possible cause
- Burnt TURN 15A fuse
- Damaged turn switch
- Damaged flasher unit
- Open or short circuit in wiring harness
- Poor connection of connector

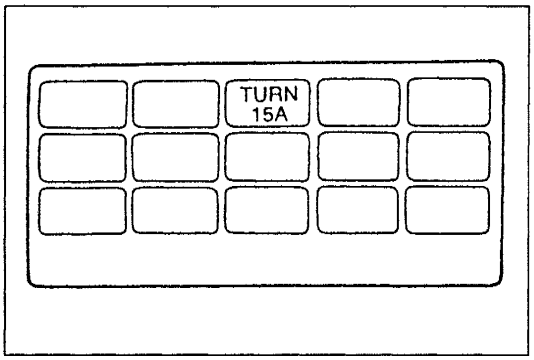

Step 1
Check the TURN 15A fuse in the fuse block.

Fuse	Action
OK	Go to Step 2
Burnt	Replace fuse after checking and repairing wiring harness

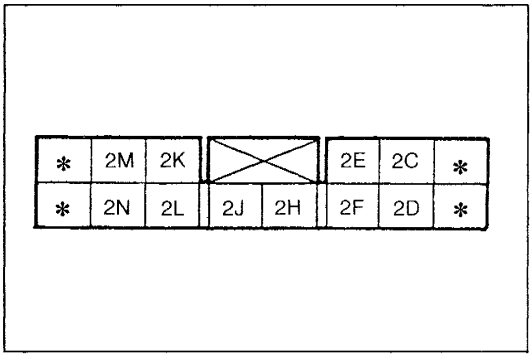

Step 2
1. Remove the column cover.
   (Refer to the 1996 626/MX-6 Workshop Manual, section S.)
2. Turn the ignition switch to ON.
3. Measure the voltage at terminal 2F (B/G) of the combination switch connector.

B+: Battery positive voltage

Voltage	Action
B+	Go to Step 3
Other	Repair wiring harness (TURN 15A fuse—Combination switch)

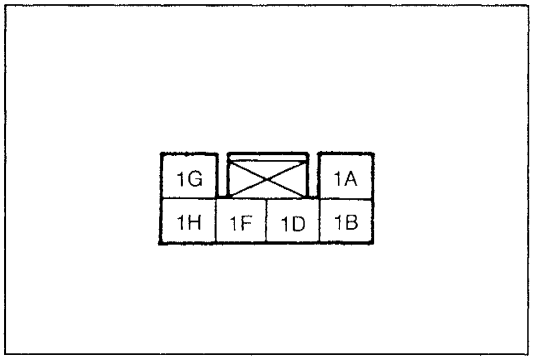

Step 3
1. Turn the turn switch on (left or right).
2. Measure the voltage at terminal 1G (G/Y) or 1H (B/R) of the combination switch connector.

B+: Battery positive voltage

Terminal	Voltage	Action
1G	B+	Go to Step 4
	Other	Inspect turn switch (Refer to page F–32)
1H	B+	Go to Step 5
	Other	Inspect turn switch (Refer to page F–32)

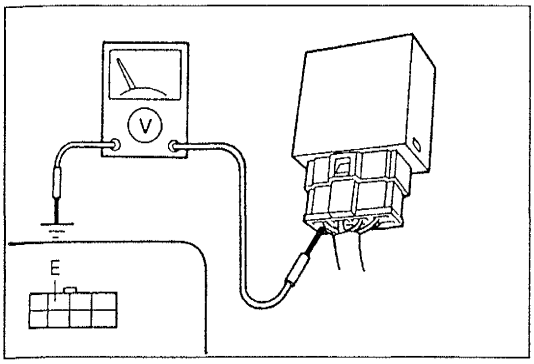

Step 4

Set the turn switch to the right position and measure the voltage at terminal E (B/R) of the flasher unit connector.

B+: Battery positive voltage

Voltage	Action
B+	Replace flasher unit
Other	Repair wiring harness (Combination switch—Flasher unit)

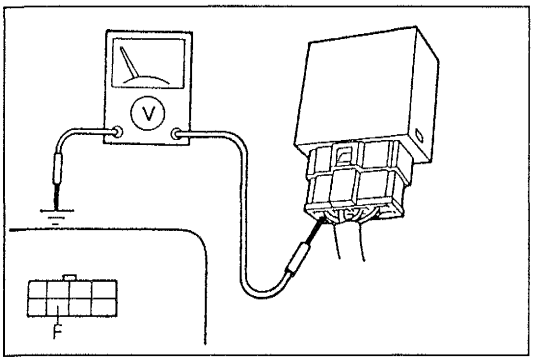

Step 5

Set the turn switch to the left position and measure the voltage at terminal F (G/Y) of the flasher unit connector.

B+: Battery positive voltage

Voltage	Action
B+	Replace flasher unit
Other	Repair wiring harness (Combination switch—Flasher unit)

Flowchart No.3	Symptom	Hazard light function does not operate (turn signal function operates)

Possible cause

- Damaged hazard warning switch
- Damaged flasher unit
- Open or short circuit in wiring harness
- Poor connection of connector

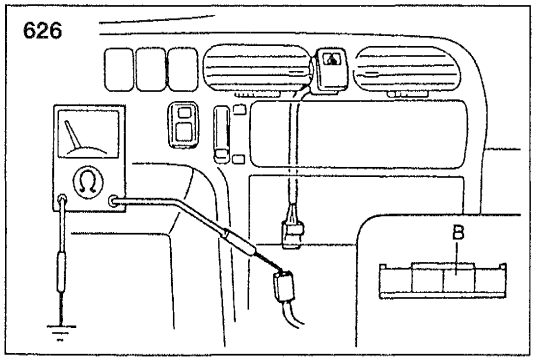

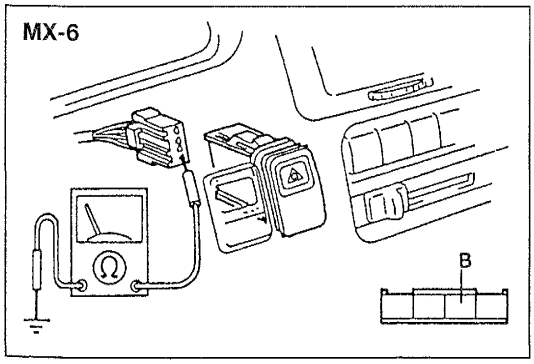

Step 1

1. Remove the hazard warning switch. (Refer to section Z4.)
2. Check for continuity between terminal B (B) of the hazard warning switch connector and ground.

Continuity	Action
Yes	Go to Step 2
No	Repair wiring harness (Hazard warning switch—GND)

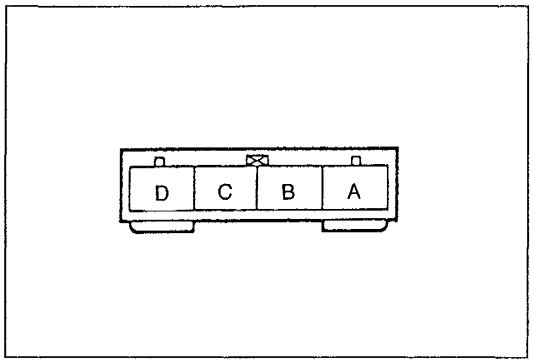

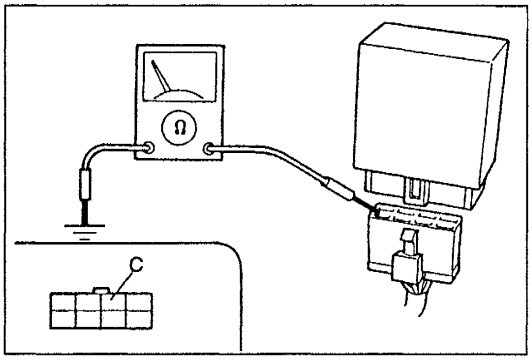

Step 2

1. Check for continuity between the terminals of the hazard warning switch.

O–O : Continuity O–⊗–O : Bulb

Terminal / Switch position	A	B	C	D
OFF			O–⊗–O	
ON	O–O		O–⊗–O	

2. If correct, reconnect the connector and go to Step 3.
3. If not as specified, replace the hazard warning switch. (Refer to section Z4.)

Step 3

1. Turn the hazard warning switch on.
2. Check for continuity between terminal C (G/R) of the flasher unit connector and ground.

Continuity	Action
Yes	Replace flasher unit
No	Repair wiring harness (Flasher unit—Hazard warning switch)

Flowchart No.4	Symptom	Left or right turn signal function does not operate (hazard light function operates)

Possible cause

- Damaged combination switch
- Damaged flasher unit
- Open or short circuit in wiring harness
- Poor connection of connector

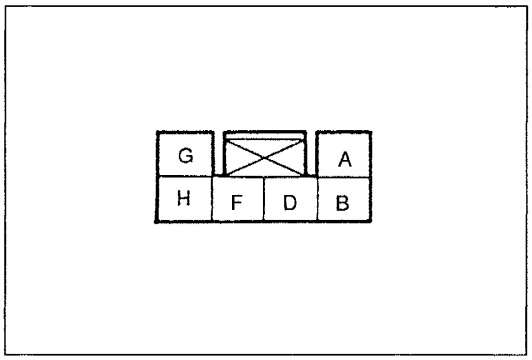

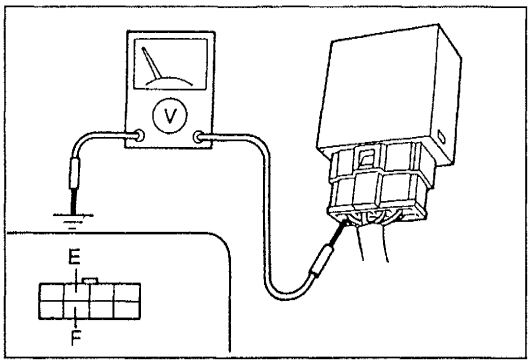

Step 1

1. Remove the column cover. (Refer to the 1996 626/MX-6 Workshop Manual, section S.)
2. Turn the ignition switch to ON.
3. Turn the turn switch on (left or right).
4. Measure the voltage at terminal G (G/Y) or H (B/R) of the combination switch connector.

B+: Battery positive voltage

Voltage	Action
B+	Go to Step 2
Other	Inspect turn switch (Refer to page F–32)

Step 2

1. Turn the turn switch on (left or right).
2. Measure the voltage at terminal F (G/Y) or E (B/R) of the flasher unit connector.

B+: Battery positive voltage

Voltage	Action
B+	Replace flasher unit
Other	Repair wiring harness (Combination switch—Flasher unit)

Flowchart No.5	Symptom	Left or right turn signal function and hazard light function do not operate

Possible cause
- Damaged flasher unit
- Burnt light bulbs
- Open or short circuit in wiring harness
- Poor connection of connector

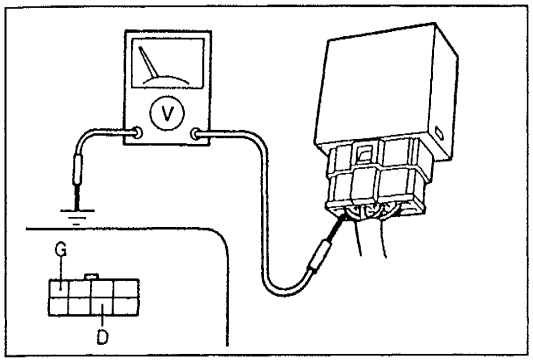

Step 1
1. Turn the ignition switch to ON.
2. Turn the turn switch on (left or right).
3. Measure the voltage at terminal D (G/B) or G (G/W) of the flasher unit connector.

B+: Battery positive voltage

Voltage	Action
Alternates 0V and B+	Go to Step 2
Other	Replace flasher unit

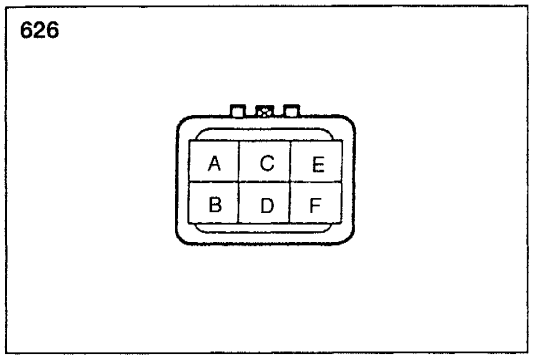

Step 2
1. Remove the front combination light and disconnect the connector.
   (Refer to section E.)
2. Turn the turn switch on (left or right).
3. Measure the voltage at terminal A (G/B or G/W) [626] or C (G/B or G/W) [MX-6] of the front combination light connector.

B+: Battery positive voltage

Voltage	Action
Alternates 0V and B+	Go to Step 3
Other	Repair wiring harness (Flasher unit—Front combination light)

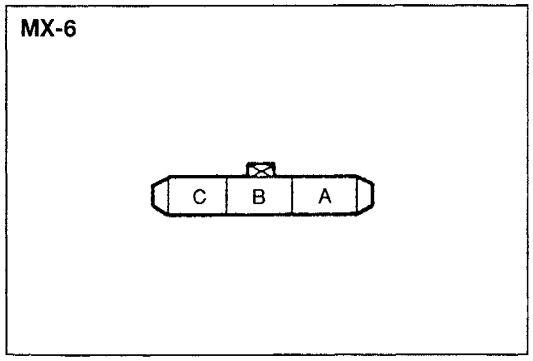

626

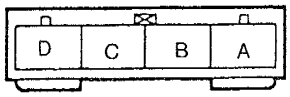

MX-6

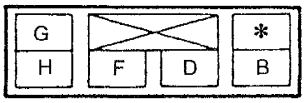

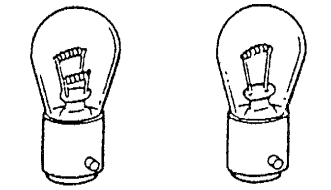

Step 3

1. Remove the trunk end upper trim and trunk end lower trim.
   (Refer to the 1996 626/MX-6 Workshop Manual, section S.)
2. Turn the turn switch on (left or right).
3. Measure the voltage at terminal D (G/B or G/W) [626] or G (G/B or G/W) [MX-6] of the rear combination light connector.

B+: Battery positive voltage

Voltage	Action
Alternates 0V and B+	Go to Step 4
Other	Repair wiring harness (Flasher unit—Rear combination light)

Step 4

1. Turn the ignition switch to LOCK.
2. Remove and check the bulbs.
   (Refer to section E.)

Turn signal light	Bulb	Action
Front	OK	Repair wiring harness (Front combination light—GND)
	Burnt	Replace bulb
Rear	OK	Repair wiring harness (Rear combination light—GND)
	Burnt	Replace bulb

Brake Lights, High-mount Brake Light Circuit diagram

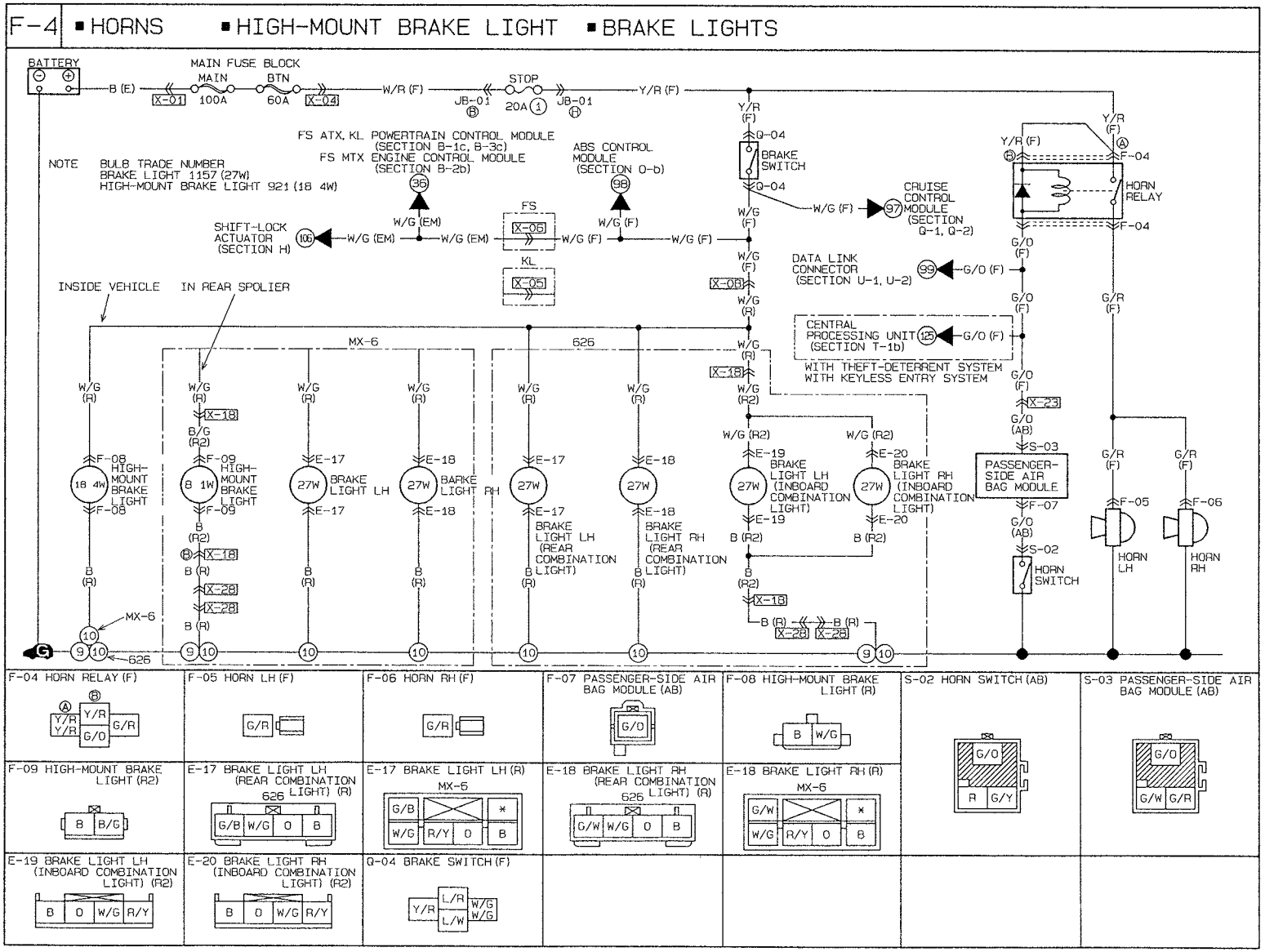

Connector locations

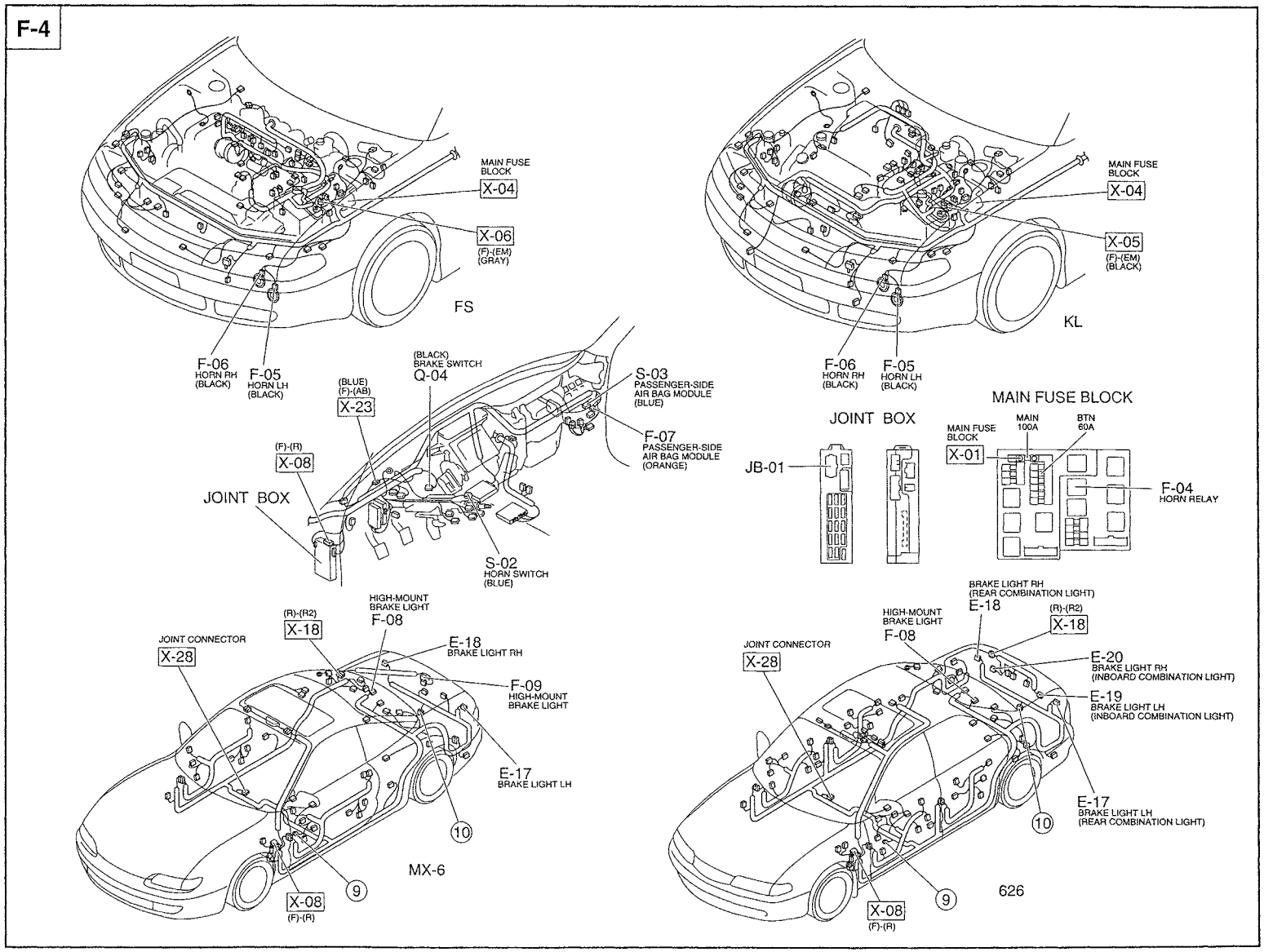

Checklist

Procedure / Proper operation	Symptom		Flowchart No.
Depress brake pedal and verify that brake lights and high-mount brake light illuminate.	Brake lights do not illuminate		1
	Brake light on one side does not illuminate		2
	High-mount brake light does not illuminate	without rear spoiler	3
		with rear spoiler	4

Flowchart No.1	Symptom	Brake lights do not illuminate

Possible cause
- Burnt STOP 20A fuse
- Damaged brake switch
- Burnt light bulbs
- Open or short circuit in wiring harness
- Poor connection of connector

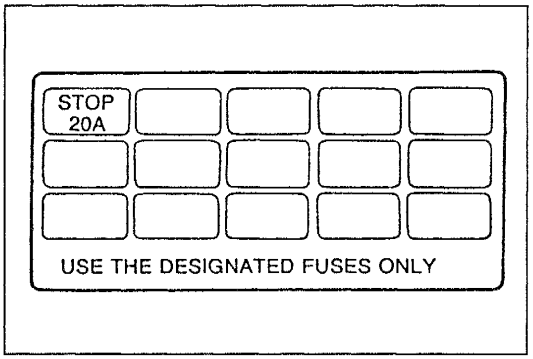

Step 1
Check STOP 20A fuse in the fuse block.

Fuse	Action
OK	Go to Step 2
Burnt	Replace fuse after checking and repairing wiring harness

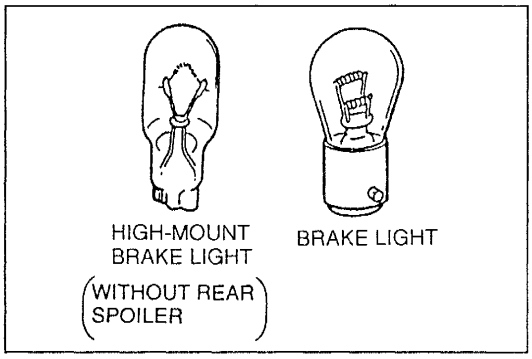

Step 2
Remove and check the brake lights bulbs.
(Refer to section E.)

Bulb	Action
OK	Go to Step 3
Burnt	Replace bulb

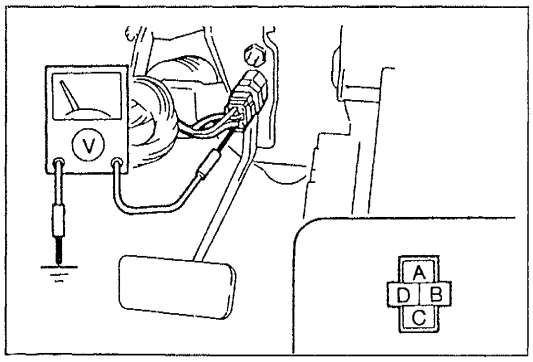

Step 3
Measure the voltage at terminal A (Y/R) of the brake switch connector.

B+: Battery positive voltage

Voltage	Action
B+	Go to Step 4
Other	Repair wiring harness (STOP 20A fuse—Brake switch)

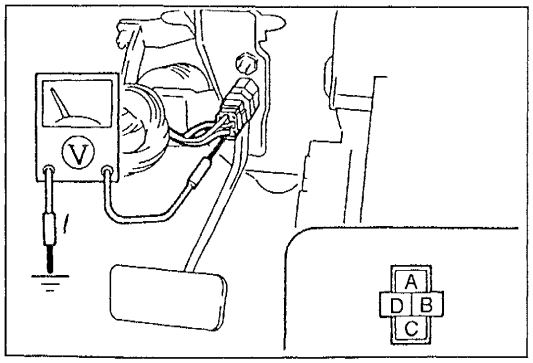

Step 4
Measure the voltage at terminal C (W/G) of the brake switch connector with the brake pedal depressed.

B+: Battery positive voltage

Voltage	Action
B+	Go to Step 5
Other	Inspect brake switch (Refer to 1996 626/MX-6 Workshop Manual, section P)

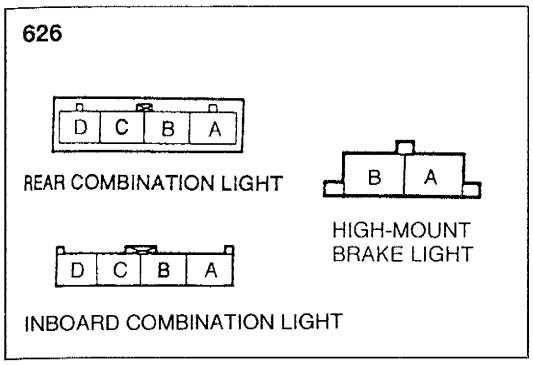

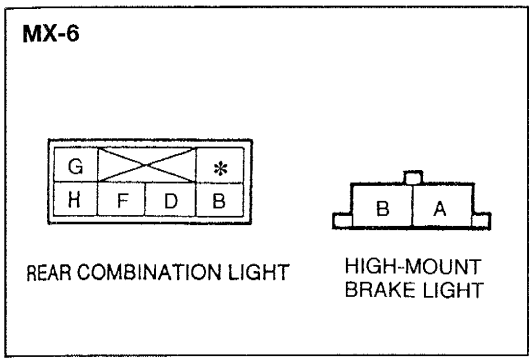

Step 5

Measure the voltage at the power-side terminals of the brake lights with the brake pedal depressed.

Rear combination light: terminal C (W/G) [626] or H (W/G) [MX-6]
Inboard combination light: terminal B (W/G)
High-mount brake light: terminal A (B/G) [without rear spoiler] or terminal A (W/G) [with rear spoiler]

B+: Battery positive voltage

Voltage	Action
B+	Repair wiring harness (Brake light—GND)
Other	Repair wiring harness (Brake switch—Brake light)

Flowchart No.2	Symptom	Brake light on one side does not illuminate

Possible cause

- Burnt light bulb
- Open or short circuit in wiring harness
- Poor connection of connector

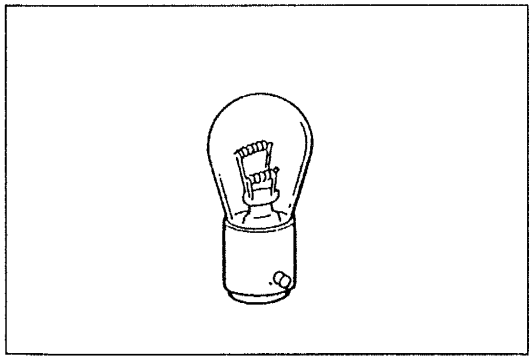

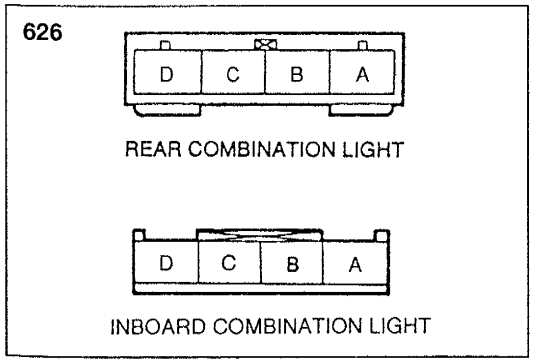

Step 1

Remove and check the brake light bulb.
(Refer to section E.)

Bulb	Action
OK	Go to Step 2
Burnt	Replace bulb

Step 2

Measure the voltage at the power-side terminals of the brake light with the brake pedal depressed

Rear combination light: terminal C (W/G) [626] or H (W/G) [MX-6]
Inboard combination light: terminal B (W/G)

B+: Battery positive voltage

Voltage	Action
B+	Repair wiring harness (Brake light—GND)
Other	Repair wiring harness (Brake switch—Brake light)

MX-6

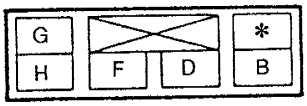

REAR COMBINATION LIGHT

Flowchart No.3	Symptom	High-mount brake light does not illuminate (without rear spoiler)

Possible cause
- Burnt light bulb
- Open or short circuit in wiring harness

HIGH-MOUNT BRAKE LIGHT

Step 1
Check the high-mount brake light bulb.

Bulb	Action
OK	Go to Step 2
Burnt	Replace bulb

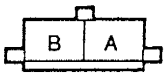

Step 2
Measure the voltage at terminal A (W/G) of the high-mount brake light connector with the brake pedal depressed.

B+: Battery positive voltage

Voltage	Action
B+	Repair wiring harness (High-mount brake light—GND)
Other	Repair wiring harness (Brake switch—High-mount brake light)

Flowchart No.4	Symptom	High-mount brake light does not illuminate (with rear spoiler)

Possible cause
- Damaged high-mount brake light
- Open or short circuit in wiring harness

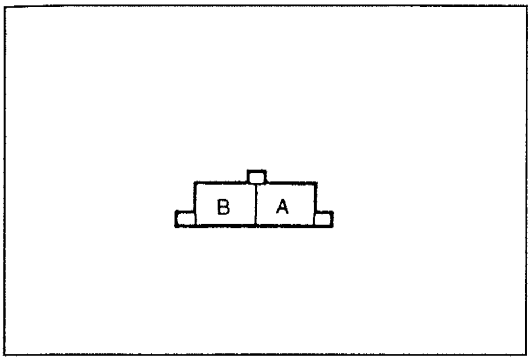

Step 1
Measure the voltage at terminal A (B/G) of the high-mount brake light connector with the brake pedal depressed.

B+: Battery positive voltage

Voltage	Action
B+	Go to Step 2
Other	Repair wiring harness (Brake switch—High-mount brake light)

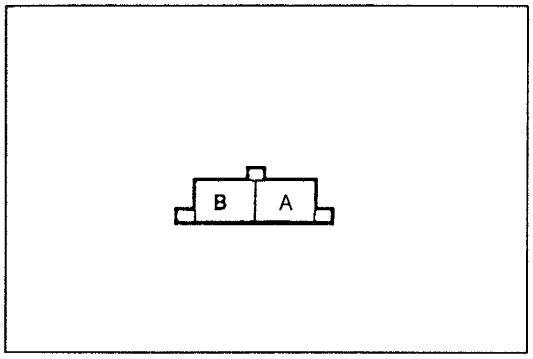

Step 2
Check for continuity between terminal B (B) of the high-mount brake light connector and ground.

Continuity	Action
Yes	Replace high-mount brake light (Refer to page F–34)
No	Repair wiring harness (High-mount brake light—GND)

Back-up Lights (626)
Circuit diagram

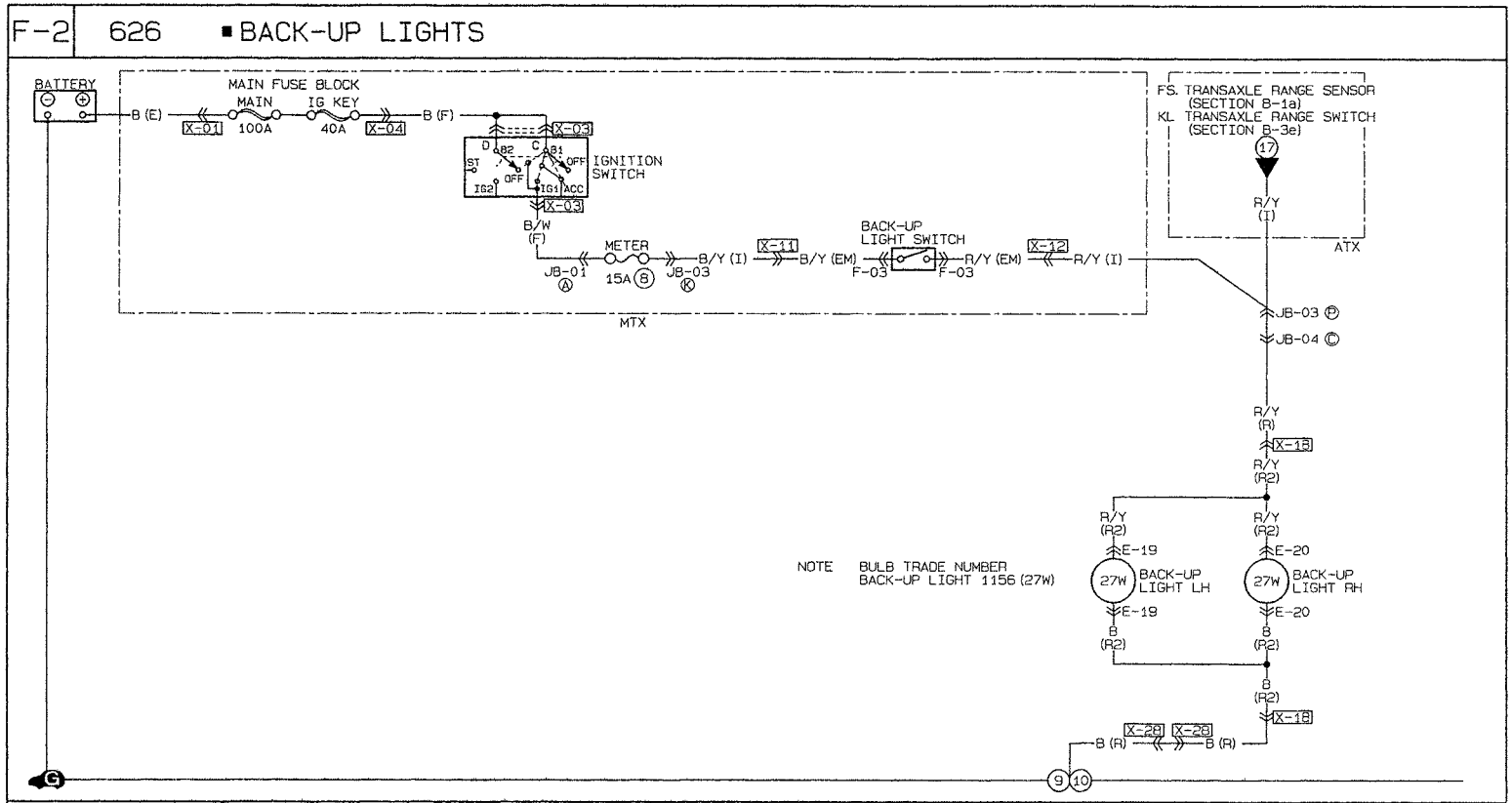

F-03 BACK-UP LIGHT SWITCH (EM)	E-19 BACK-UP LIGHT LH (R2)	E-20 BACK-UP LIGHT RH (R2)				
B/Y R/Y	B O W/G R/Y	B O W/G R/Y				

Connector locations

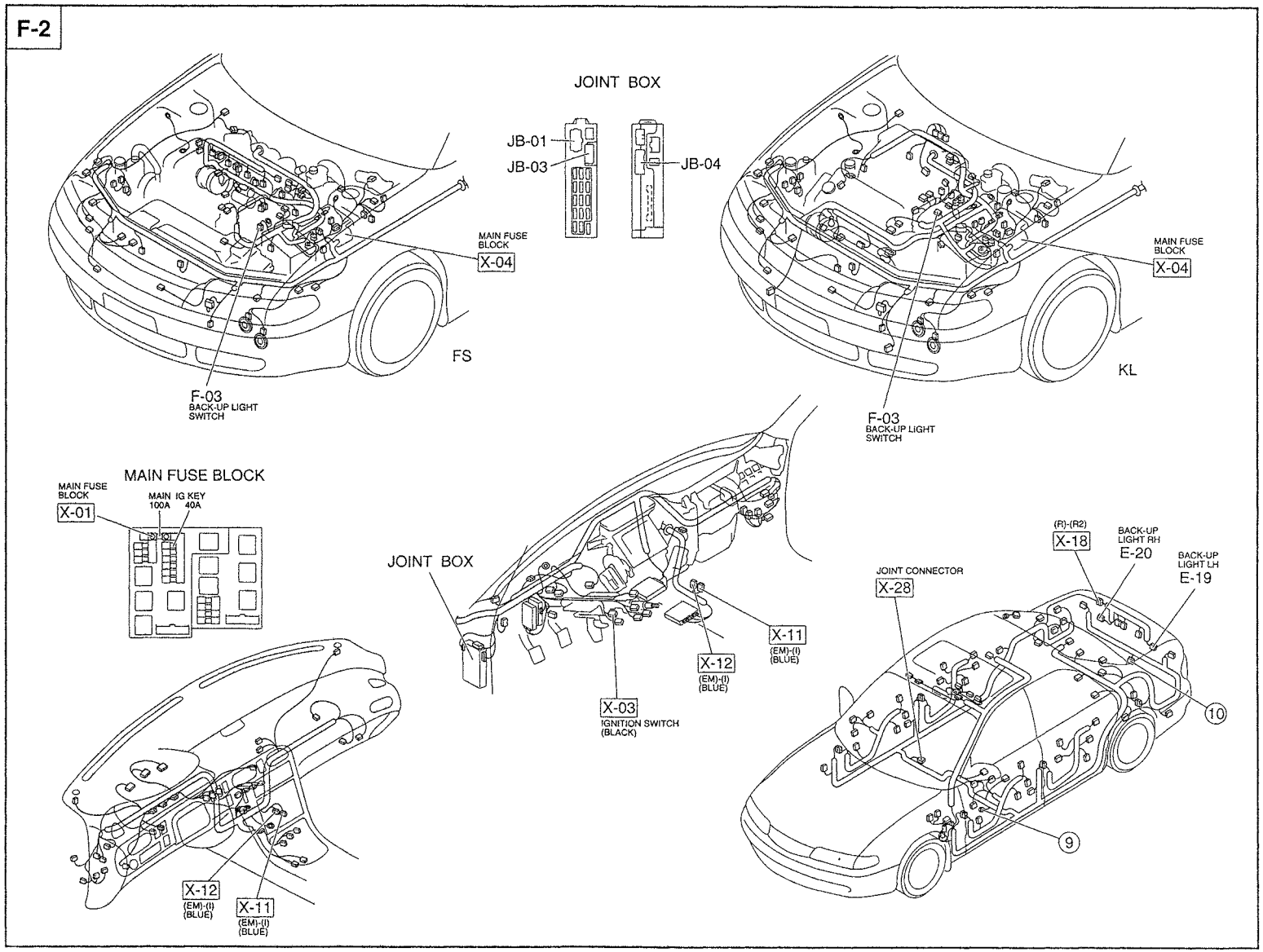

Back-up Lights (MX-6)
Circuit diagram

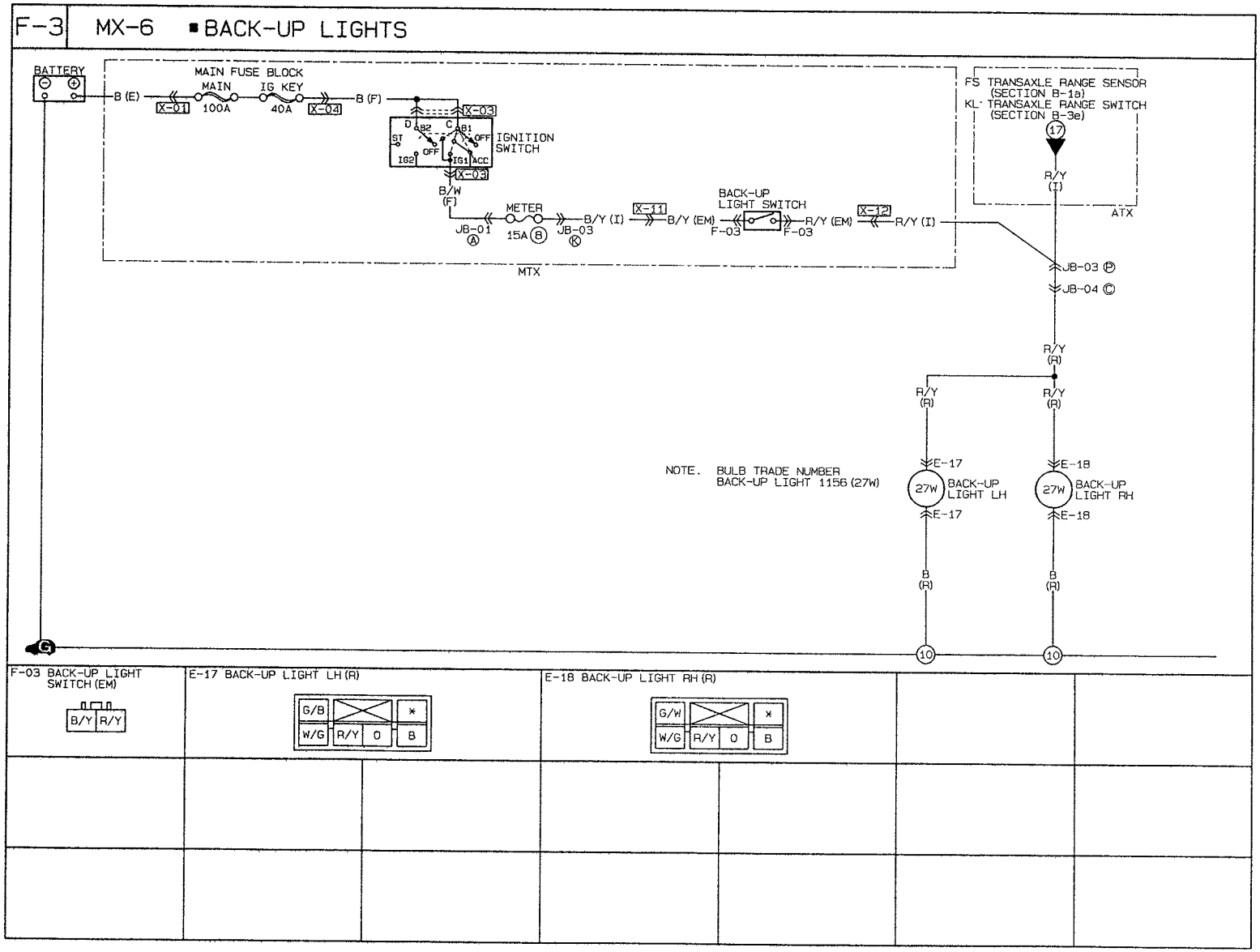

Connector locations

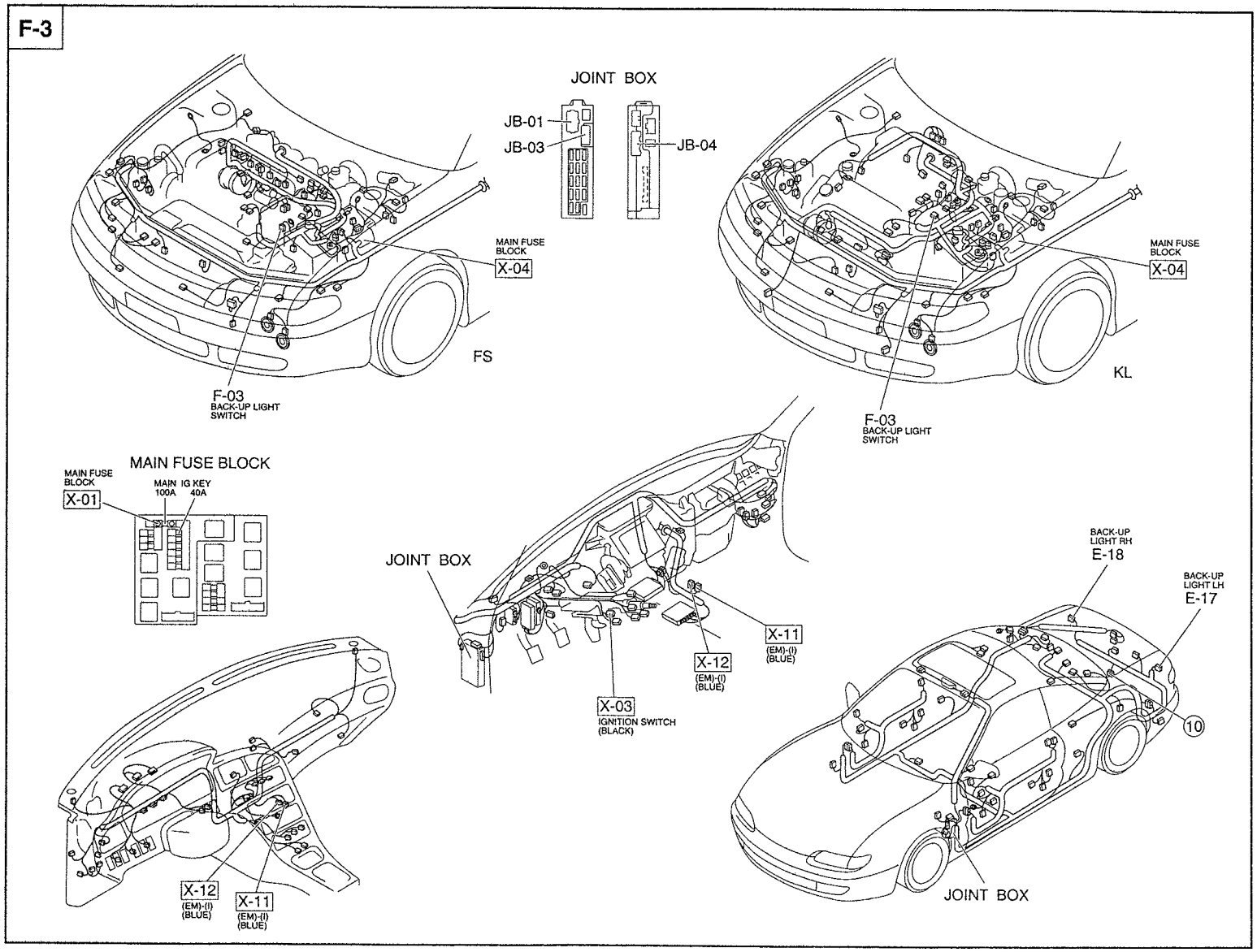

Checklist

Procedure / Proper operation	Symptom	Flowchart No.
1. Turn ignition switch to ON. 2. Set shift/selector lever to reverse position and verify that back-up lights illuminate.	Back-up lights do not illuminate	1
	One back-up light does not illuminate	2

Flowchart No.1	Symptom	Back-up lights do not illuminate

Possible cause
- Burnt METER 15A fuse
- Damaged back-up light switch (MTX)
- Damaged transaxle range switch (ATX)
- Burnt light bulbs
- Open or short circuit in wiring harness
- Poor connection of connector

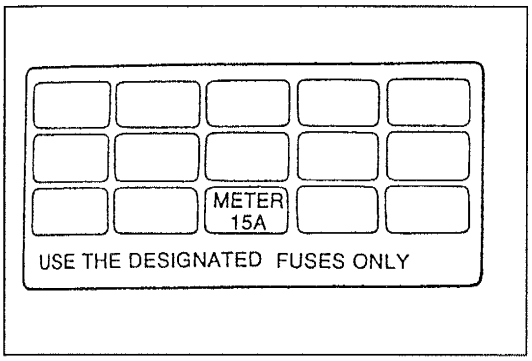

Step 1
Check METER 15A fuse in the fuse block.

Fuse	Action
OK	Go to Step 2
Burnt	Replace fuse after checking and repairing wiring harness

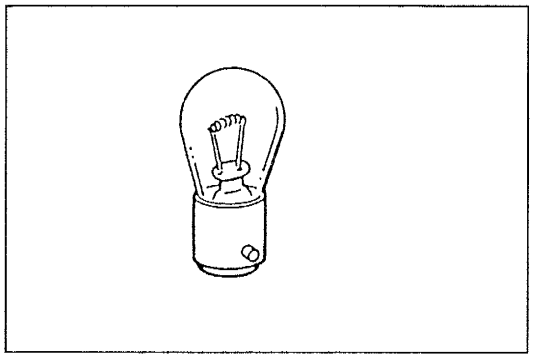

Step 2
Check the back-up light bulb.

Bulb	Action
OK	Go to Step 3
Burnt	Replace bulb

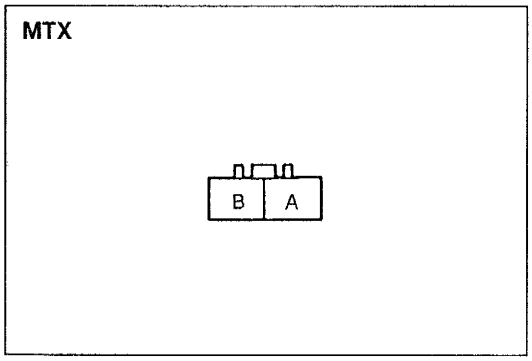

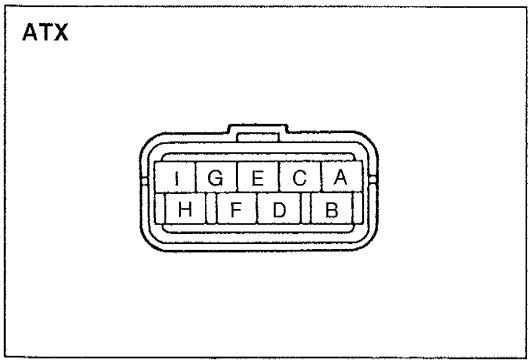

Step 3
1. Turn the ignition switch to ON.
2. Measure the voltage at terminal B (B/Y) of the back-up light switch [terminal I (B/Y) of the transaxle range switch].

B+: Battery positive voltage

Voltage	Action
B+	Go to Step 4
Other	Repair wiring harness (METER 15A fuse—Back-up light switch [transaxle range switch])

[ ]: ATX

MTX

ATX

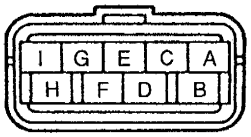

626

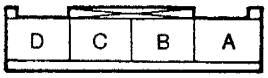

INBOARD COMBINATION LIGHT

MX-6

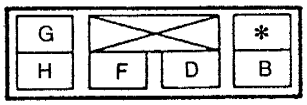

REAR COMBINATION LIGHT

Step 4

1. Shift the shift [selector] lever to the reverse position.
2. Measure the voltage at terminal A (R/Y) of the back-up light switch [terminal C (R/Y) of the transaxle range switch].

B+: Battery positive voltage

Voltage	Action
B+	Go to Step 5
Other	Inspect back-up light switch (Refer to page F–33) [transaxle range switch] (Refer to 1996 626/MX-6 Workshop Manual, section K1)

[ ]: ATX

Step 5

Measure the voltage at terminal A (R/Y) [626] of the inboard combination light or F (R/Y) [MX-6] of the rear combination light.

B+: Battery positive voltage

Voltage	Action
B+	Repair wiring harness (Back-up light—GND)
Other	Repair wiring harness (Back-up light switch [transaxle range switch]—Back-up light)

[ ]: ATX

Flowchart No.2	Symptom	One back-up light does not illuminate

Possible cause
- Burnt light bulb
- Open or short circuit in wiring harness
- Poor connection of connector

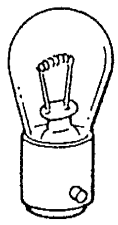

Step 1
Check the back-up light bulb.

Bulb	Action
OK	Go to Step 2
Burnt	Replace bulb

626

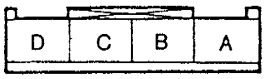

INBOARD COMBINATION LIGHT

MX-6

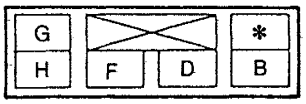

REAR COMBINATION LIGHT

Step 2
1. Turn the ignition switch to ON.
2. Shift the shift [selector] lever to the reverse position.
3. Measure the voltage at terminal A (R/Y) [626] of the inboard combination light or F (R/Y) [MX-6] of the rear combination light.

B+: Battery positive voltage

Voltage	Action
B+	Repair wiring harness (Back-up light—GND)
Other	Repair wiring harness (Back-up light switch [transaxle range switch]—Back-up light)

[ ]: ATX

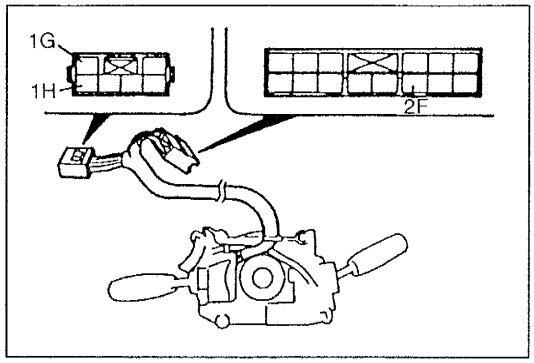

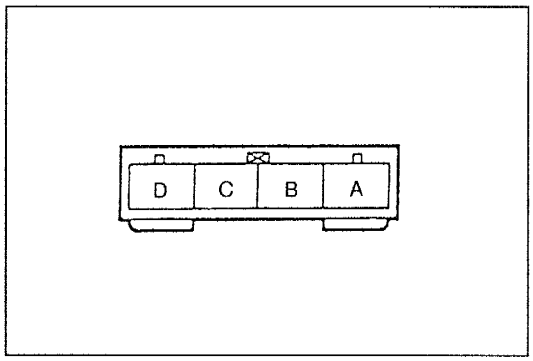

TURN SWITCH (COMBINATION SWITCH)

Inspection

1. Check for continuity between the switch terminals.

O–O : Continuity

Terminal / Switch position	2F	1G	1H
Left	O	O	
OFF			
Right	O		O

2. If not as specified, replace the combination switch. (Refer to section Z4.)

HAZARD WARNING SWITCH

Inspection

1. Remove the hazard warning switch. (Refer to section Z4.)
2. Check for continuity between the switch terminals.

O–O : Continuity O–⊗–O : Bulb

Terminal / Switch position	A	B	C	D
OFF			O	O
ON	O	O	O	O

3. If not as specified, replace the hazard warning switch. (Refer to section Z4.)

FLASHER UNIT

Inspection

1. Measure the voltage at the flasher unit terminals as indicated below.
2. If not as specified, inspect the parts listed under "Inspection area" and the related wiring harness.
3. If the parts and wiring harness are OK but the system still dose not work properly, replace the flasher unit.

Terminal voltage list

B+: Battery positive voltage

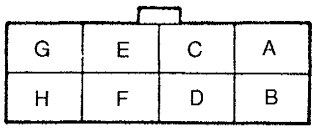

Terminal	Signal	Connection	Test condition	Voltage / continuity	Inspection area
A	Flasher unit ground	GND	Constant: check for continuity to ground	Yes	Wiring harness (Flasher unit—GND)
B	—	—	—	—	—
C	Hazard warning on	Hazard warning switch	Hazard warning switch : on	0 V	Hazard warning switch
			Hazard warning switch : off	B+	
D	Turn signal flasher (LH)	Turn signal light (LH)	Turn signal light (LH) flashes	Alternates 0 V and B+	Turn signal light (LH)
			Other	0 V	
E	Turn switch on / off (RH)	Combination switch	Ignition switch and turn switch (RH) : on	B+	Combination switch
			Other	0 V	
F	Turn switch on / off (LH)	Combination switch	Ignition switch and turn switch (LH) : on	B+	Combination switch
			Other	0 V	
G	Turn signal flasher (RH)	Turn signal light (RH)	Turn signal light (RH) flashes	Alternates 0 V and B+	Turn signal light (RH)
			Other	0 V	
H	B+	HAZARD 15A fuse	Constant	B+	HAZARD 15A fuse

BACK-UP LIGHT SWITCH (MTX)

Inspection

1. Disconnect the back-up light switch connector.
2. Shift the shift lever to the reverse position.
3. Check for continuity between terminals A and B of the back-up light switch.
4. If there is no continuity, replace the back-up light switch.

HIGH-MOUNT BRAKE LIGHT

Removal / Installation

1. Remove in the order shown in the figure.
2. Install in the reverse order of removal.

626
MX-6 (WITHOUT REAR SPOILER)

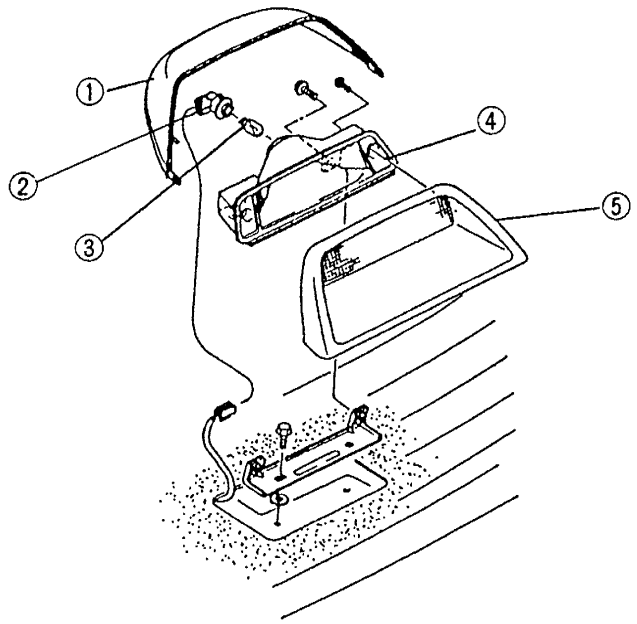

1. Cover
2. Socket assembly
3. Bulb **18.4W (921)**
4. Housing
5. Lens

MX-6 (WITH REAR SPOILER)

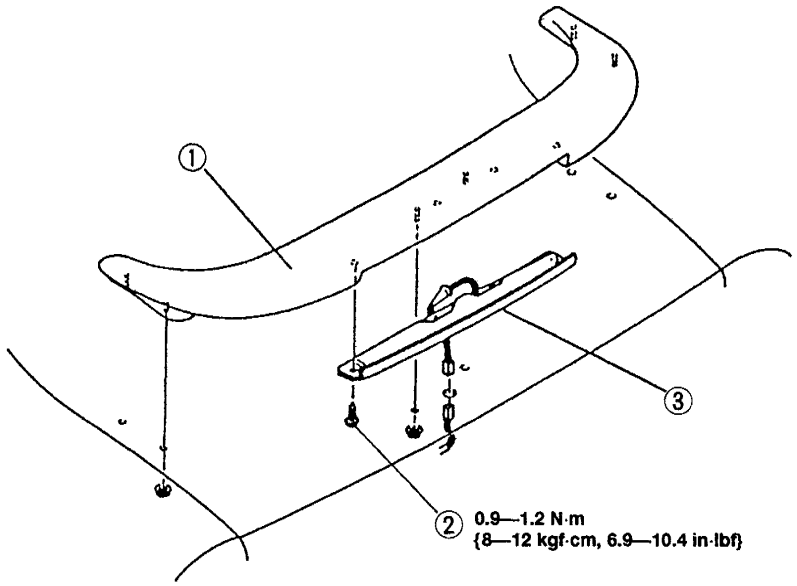

1. Rear spoiler
2. Screw
3. LED

Before beginning any service procedure, refer to section S of this manual for air bag system service warnings.

HEATER AND AIR CONDITIONER SYSTEMS

INDEX

HEATER

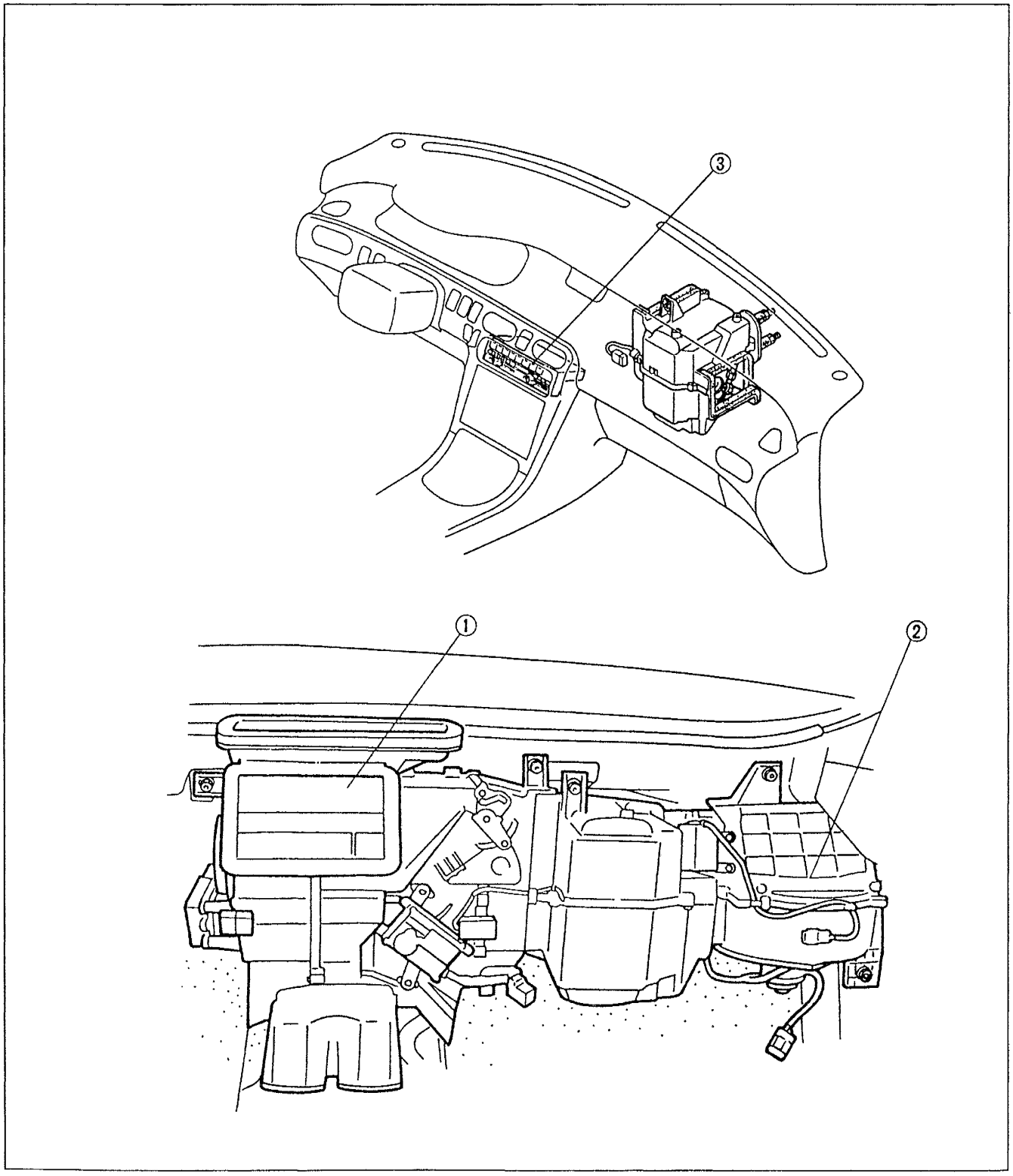

AIR CONDITIONER

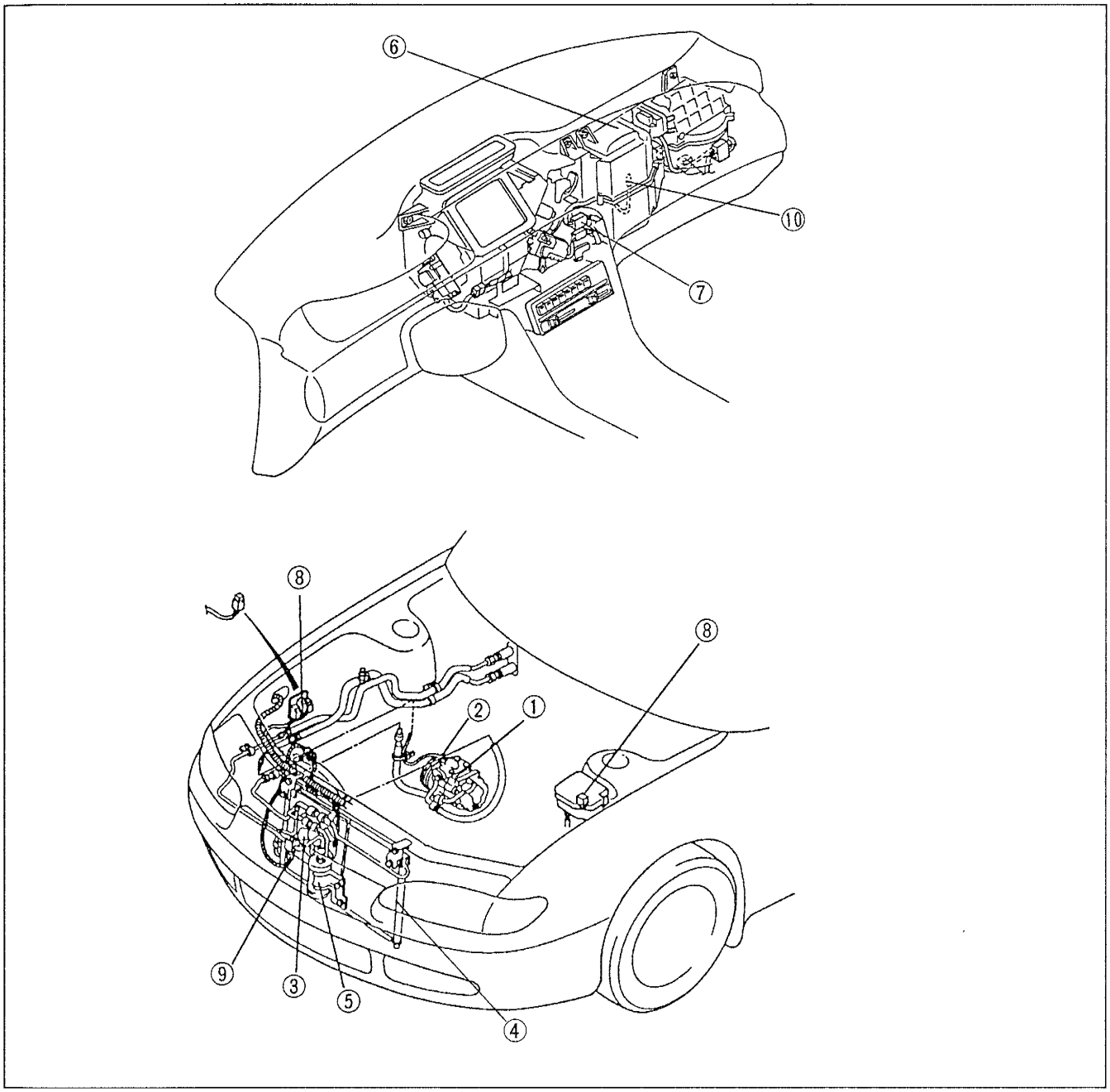

CAUTIONARY POINTS FOR MAINTENANCE

REFRIGERANT–134a (R–134a)

Outline

- R–12 and other fluorocarbons now used in air conditioners can destroy the ozone layer in the stratosphere. The result is an increase in hazardous ultraviolet rays which over time can adversely affect both human health and the biosphere. Because of this concern, Mazda has chosen to use R–134a (HFC–134a), a hydrofluorocarbon-based refrigerant that does not deplete the ozone layer, in this vehicle.
- R–12 and R–134a are not interchangeable; system parts and system service tools also differ. The table below compares the two systems.

Refrigerant systems

Part	R–12 system	R–134a system	Remarks
Refrigerant	Chlorofluorocarbon–12 (CFC–12) [CCl_2F_2]	Hydrofluorocarbon–134a (HFC–134a) [CH_2FCF_3]	If the refrigerants are mixed or one refrigerant is used in a system that requires the other, the compressor oil will separate from the refrigerant and not circulate within the system. This can damage the A/C compressor and cause abnormal compressor vane noise. In addition, mixing R–134a with R–12 or using R–134a instead of R–12 in an R–12 system can lower the durability of the NBR O-ring and dissolve the fluorine O-rings. If the fluorine O-rings are dissolved, refrigerant may leak.
Compressor oil	Mineral oil	Polyalkylene glycol oil (PAG oil)	Special compressor oils for R–134a air conditioning systems are developed by each air conditioning vendor. Therefore, use only the specified oil for each model vehicle. If a PAG oil other than specified type is used, the A/C compressor and refrigerant system can be damaged. If the oils are mixed or one oil is used in a system that requires the other, the refrigerant will separate from the compressor oil and not circulate within the system. This can damage the A/C compressor and cause abnormal compressor vane noise. Mixing PAG oil with mineral oil or using PAG oil instead of mineral oil in an R–12 system can lower the durability of the NBR and fluorine rubber O-rings.
O-ring	Nitrile butadiene rubber (NBR) Fluorine rubber	High-circulated nitrile butadiene rubber (HNBR)	If an NBR O-ring is used in an R–134a system, the PAG oil and R–134a will lower the durability of the O-ring. If a fluorine rubber O-ring is used in an R–134a system, the R–134a will dissolve the O-ring and cause the refrigerant to leak.
Joint nuts	Inch threads	Metric threads	Thread standards for joint nuts connecting pipes and hoses have been changed to avoid connecting R–12 system parts with R–134a system parts.
Joint blocks	—	—	The bolt sizes and part measurements for joint blocks connecting cooler pipes and cooler hoses have been changed to avoid connecting R–12 system parts with R–134a system parts.
Charging valve	Screw-on type Hi: 3/8–24 UNF Lo: 7/16–20 UNF	Quick-connect type Hi: 16mm {0.6 in} dia. Lo: 13mm {0.5 in} dia.	The shape of the charging valve differs for each system to avoid confusion. The quick-connect type charging valve prevents refrigerant from leaking when the charging hose is connected to the valve.

Service tools

Part	R–12 system	R–134a system	Remarks
Tool joints	Inch threads	Metric threads	Thread standards for tool joints have been changed to avoid connecting R–12 system tools with R–134a system tools.
Charging valve joints	Screw-on type Hi: 3/8—24 UNF Lo: 7/16—20 UNF	Quick-connect type Hi: 16 mm {0.6 in} dia. Lo: 13 mm {0.5 in} dia.	The shape of the charging valve joints differ for each system to avoid confusion. The quick-connect type charging valve joint prevents refrigerant from leaking when the charging hose is connected to the valve.
Manifold gauge	High-pressure-side maximum reading: 2.9 MPa {30 kgf/cm², 430 psi}	High-pressure-side maximum reading: 3.4 MPa {35 kgf/cm², 500 psi}	R-134a requires a higher pressure to condense than R-12.
Leak tester	Gas type Electric type	Electric type	A gas leak tester reacts with chlorine in R–12 to indicate the location of a leak. This kind of tester does not work with an R–134a system, however, because R–134a has no chlorine. Two kinds of electric tester are available those that work exclusively with one system or the other and those that work with both. A tester built only for R–12 systems can not be used with an R–134a system.

SERVICE WARNINGS

Using/Handling Unapproved Refrigerant

- **Using a flammable refrigerant, such as OZ-12, in this vehicle is dangerous. In an accident, the refrigerant may catch fire, resulting in serious injury or death. When servicing this vehicle, use only R-134a.**

- **Checking for system leaks on a vehicle that has been serviced with flammable refrigerant, such as OZ-12, is dangerous. Conventional leak detectors use an electronically generated arc which can ignite the refrigerant, causing serious injury or death. If a flammable refrigerant has been used to service the system, or if you suspect a flammable refrigerant may have been used, contact the local fire marshall or EPA office for information on handling the refrigerant.**

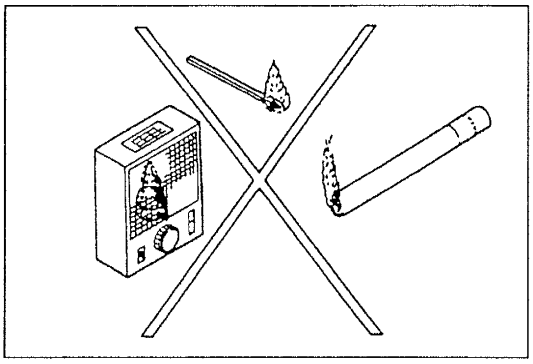

Servicing Refrigerant System

- Do not allow the refrigerant to leak near fire or any kind of heat. A poisonous gas may be generated if the refrigerant gas contacts fire or heat such as from cigarettes and heaters.
  When carrying out any operation that can cause refrigerant leakage, extinguish or remove the above-mentioned heat sources and maintain adequate ventilation.

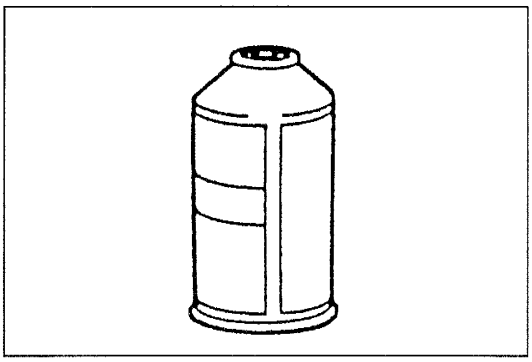

Storing Refrigerant

- The refrigerant container is highly pressurized. If it is subjected to high heat, it could explode, scattering metal fragments and liquid refrigerant that can seriously injure you. Store the refrigerant at temperatures below 40 °C {104 °F}.

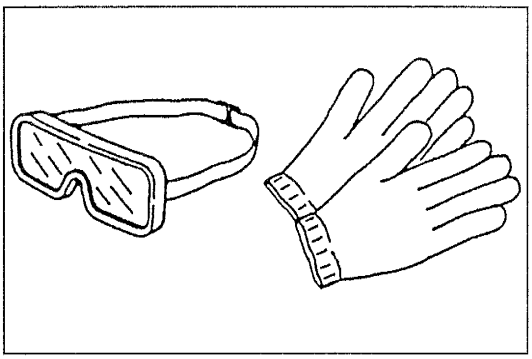

Handling Refrigerant

- Handling liquid refrigerant is dangerous. A drop of it on the skin can result in localized frostbite. When handling the refrigerant, wear gloves and safety goggles. If refrigerant splashes into the eyes, immediately wash them with clean water and consult a doctor.

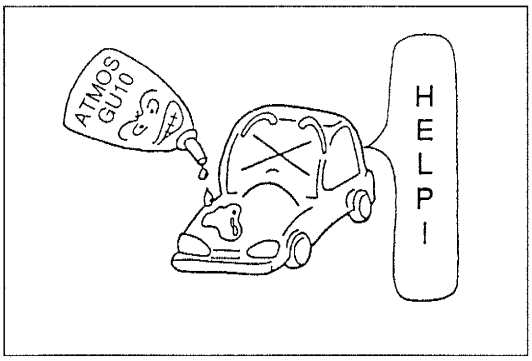

SERVICE CAUTIONS

Compressor Oil (ATMOS GU10)

- Do not spill compressor oil on the vehicle. A drop of compressor oil on the vehicle surface can eat away at the paint. If oil gets on the vehicle, wipe it off immediately.

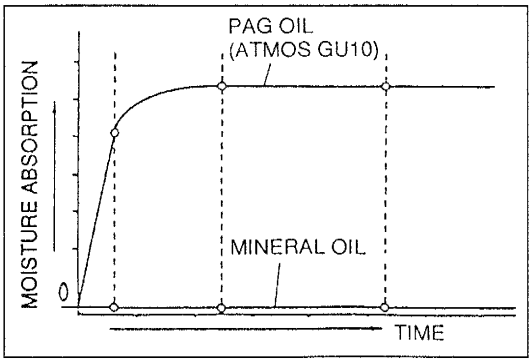

- PAG oil (ATMOS GU10) has a higher moisture absorption efficiency than the previously used mineral oil. If moisture mixes with the compressor oil, the refrigerant system could be damaged. Therefore, install caps immediately after using the compressor oil or removing refrigerant system parts to prevent moisture absorption.

TROUBLESHOOTING GUIDE

FUNDAMENTAL PROCEDURES OF TROUBLESHOOTING

Proceed with troubleshooting of the heater and air conditioner by following the steps below.

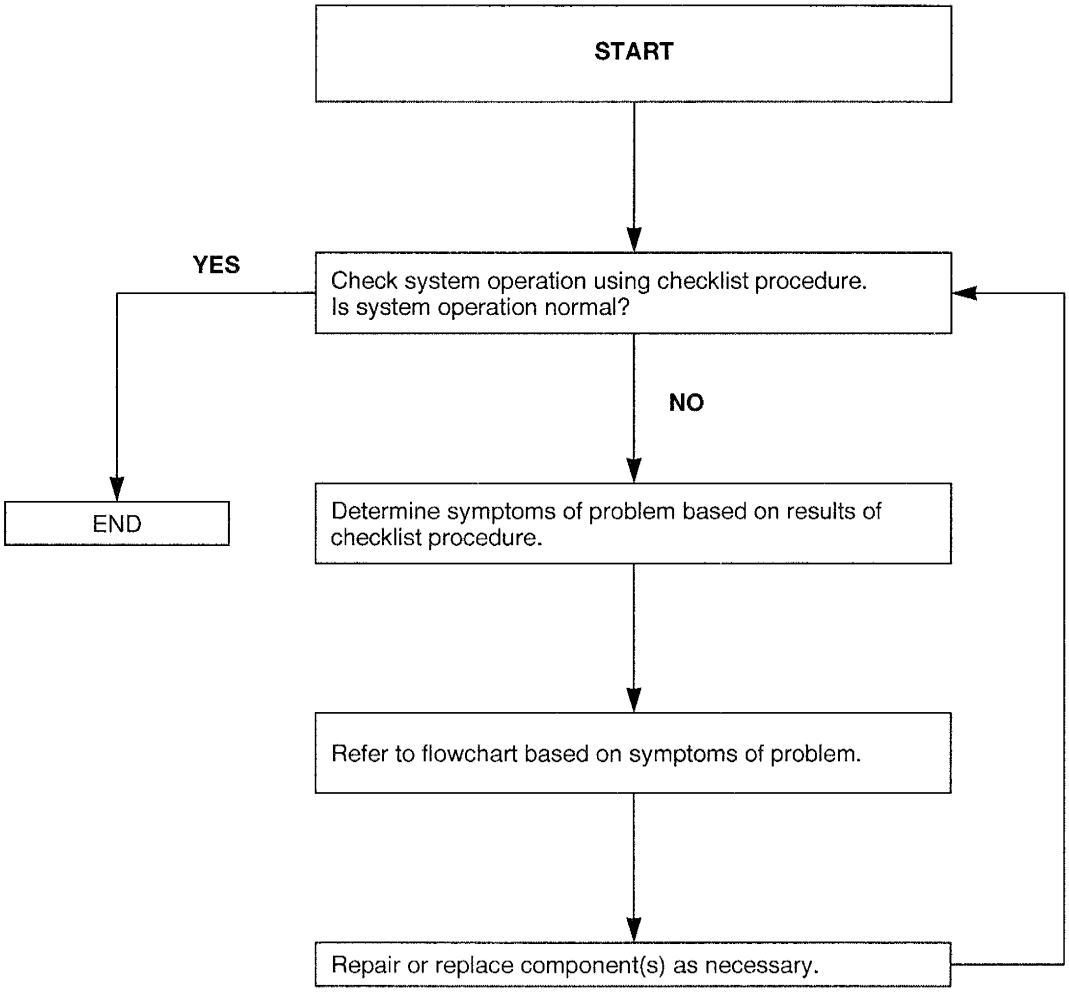

CHECKLIST

- When inspecting the heater or air conditioner, warm up the engine before each operational check. The engine coolant temperature must be 40 °C {104 °F} or higher.
- The air conditioner is composed of an electrical system as well as a refrigerant system. Because some refrigerant system components require the evacuation of refrigerant gas before replacement, inspect the electrical system first.

Symptom	Operational check	Malfunction	Flowchart No.
No airflow	Check motor operation when fan switch is turned to 1st, 2nd, 3rd, and 4th respectively.	Blower motor does not operate at any fan switch position	1
		Blower motor does not operate when fan switch is at 1st position	2
		Blower motor does not operate when fan switch is at 2nd position	
		Blower motor does not operate when fan switch is at 3rd position	
		Blower motor does not operate when fan switch is at 4th position	
Airflow is not cool (slightly cool)	Turn fan switch and A/C switch on. Check operation of magnetic clutch and condenser fan.	Magnetic clutch and condenser fan do not operate	3 (FS engine)
		Magnetic clutch does not operate (condenser fan operates normally)	4 (KL engine)
			5 (FS engine)
		Condenser fan does not operate (magnetic clutch operates normally)	6 (KL engine)
			7 (FS engine)
Airflow mode does not change	Press airflow mode switches to each mode. Verify that air outlets change accordingly.	Airflow mode does not change	8
Intake air mode does not change	Press REC/FRESH switches. Verify that recirculation and fresh change accordingly.	Intake air mode does not change	9
Airflow temperature does not change	Move temperature control lever from MAX COLD to MAX HOT and verify that the airflow temperature changes.	Airflow temperature does not change	10

CIRCUIT DIAGRAM
Heater and Air Conditioner
Circuit Diagram 1

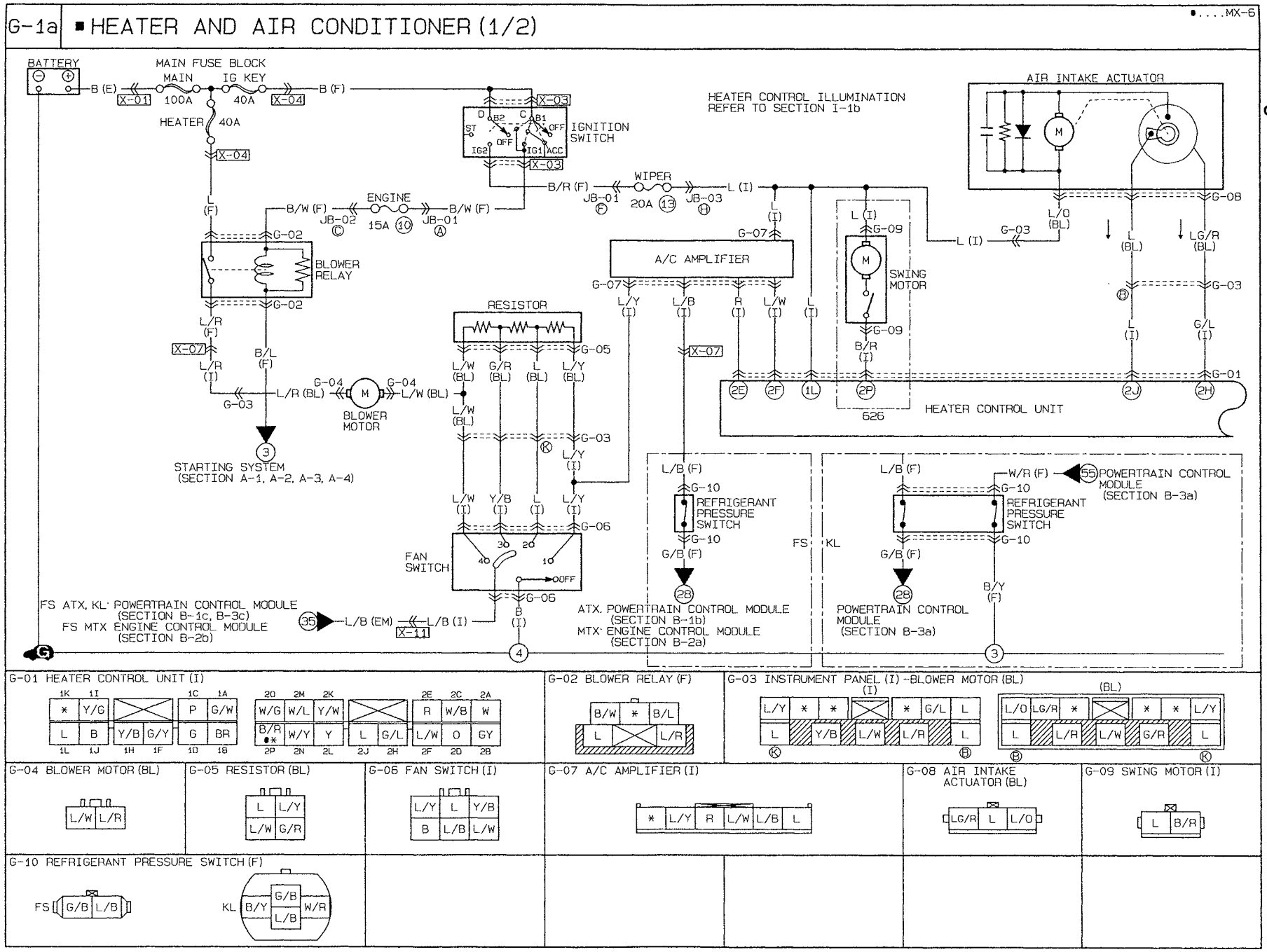

Connector Locations 1

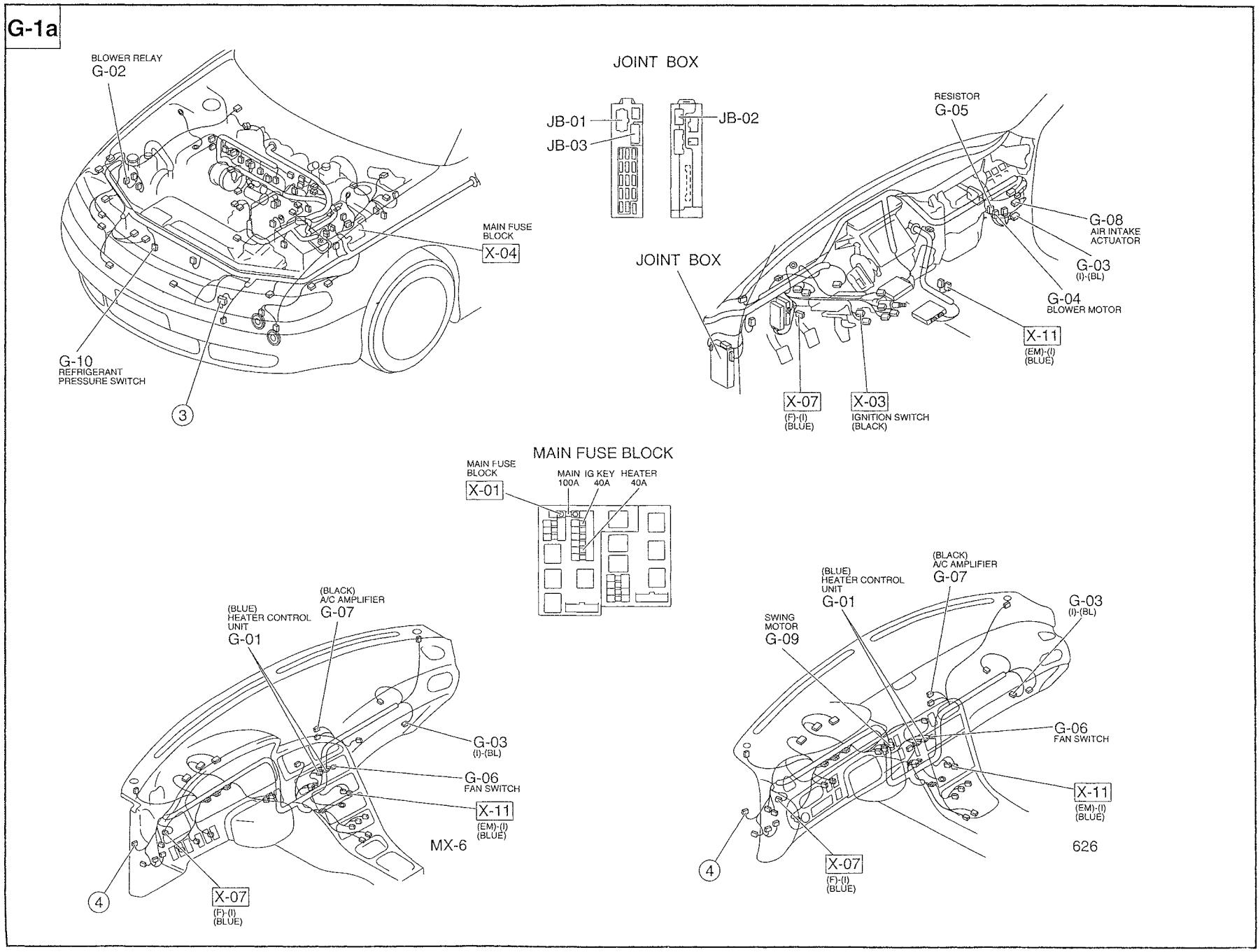

Heater and Air Conditioner Circuit Diagram 2

G-1b ■ HEATER AND AIR CONDITIONER (2/2)

MX-6

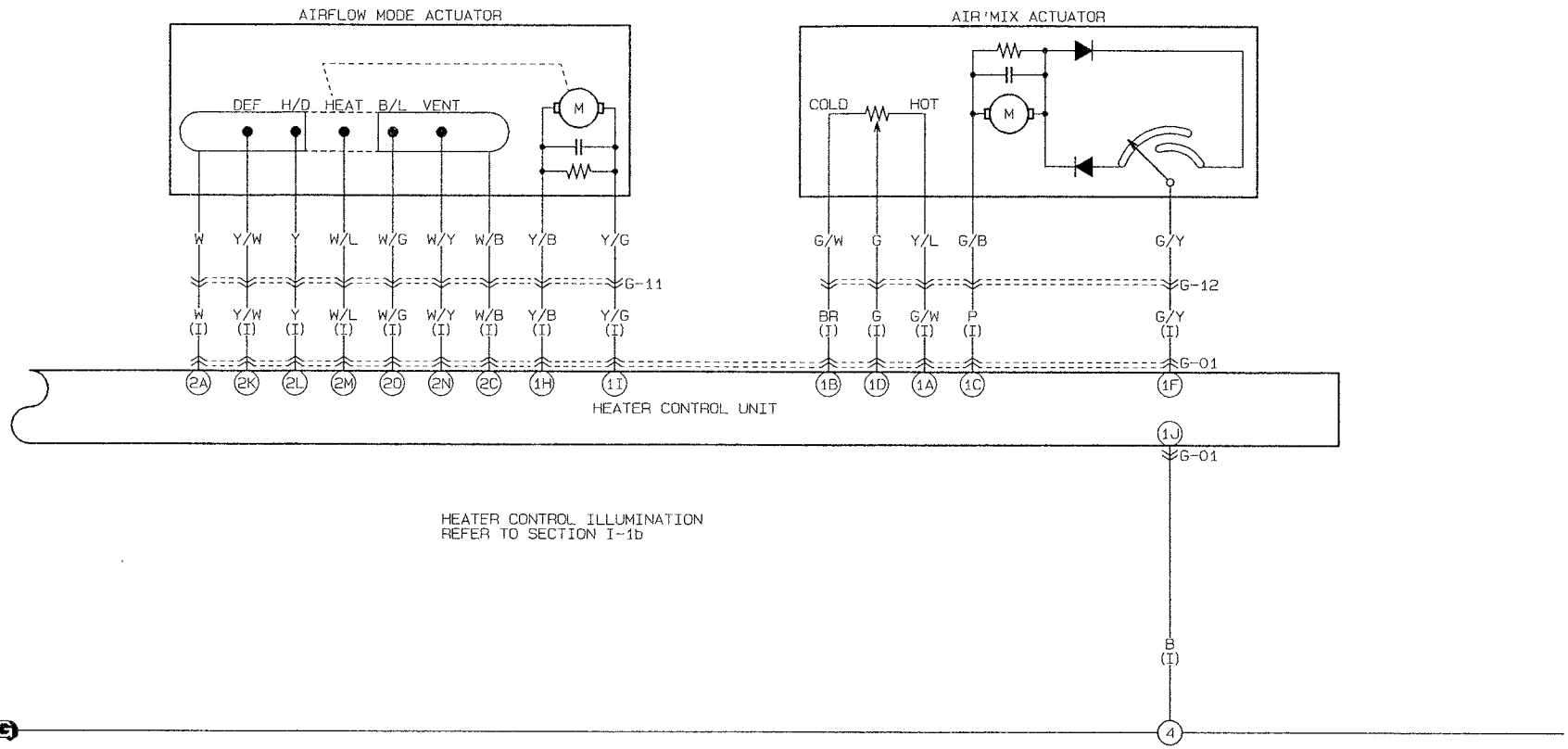

G-01 HEATER CONTROL UNIT (I)

1K	1I		1C	1A
*	Y/G		P	G/W
L	B	Y/B G/Y	G	BR
1L	1J	1H 1F	1O	1B

2O	2M	2K		2E	2C	2A
W/G	W/L	Y/W		R	W/B	W
B/R *	W/Y	Y	L G/L	L/W	O	GY
2P	2N	2L	2J 2H	2F	2D	2B

G-11 INSTRUMENT PANEL (I) -AIRFLOW MODE ACTUATOR

(I)

W	Y/B		W/G	W/B
*	Y/G	Y/W Y	W/L	W/Y

W/B	W/G		Y/B	W
W/Y	W/L	Y Y/W	Y/G	*

G-12 INSTRUMENT PANEL (I) -AIR MIX ACTUATOR

(I)

P		BR
G/Y	* G/W	G

G/W		G/B
G	Y/L *	G/Y

Connector Locations 2

G-1b

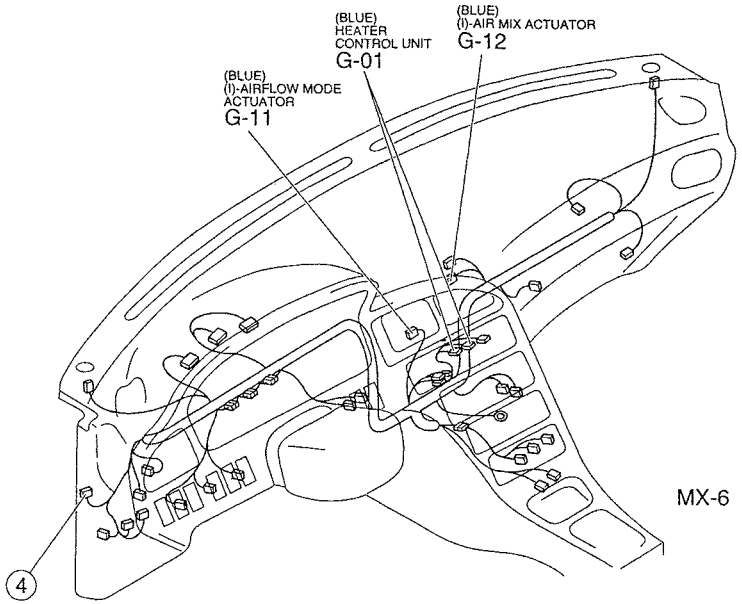

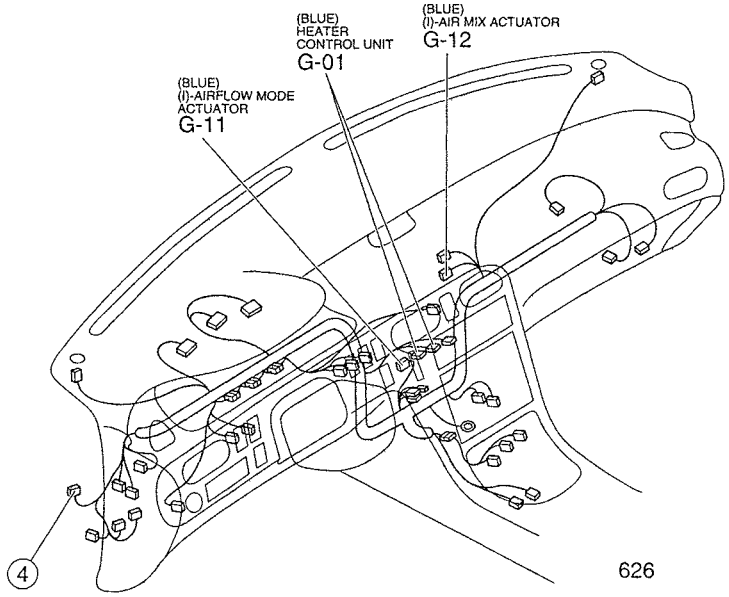

Condenser Fan System (FS) Circuit Diagram

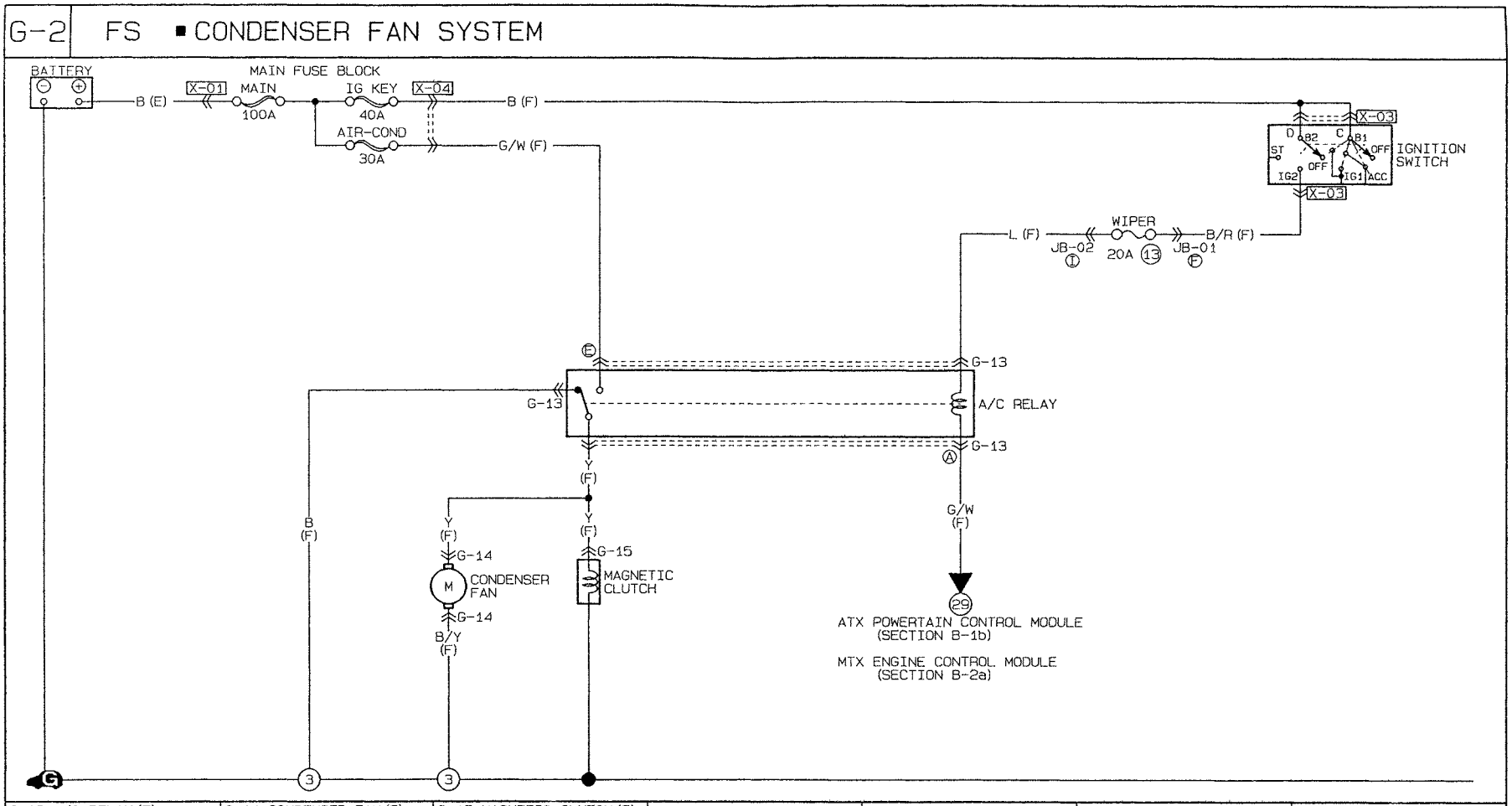

G-13 A/C RELAY (F)	G-14 CONDENSER FAN (F)	G-15 MAGNETIC CLUTCH (F)				
Ⓔ G/W, Y, Ⓐ G/W B, L, *	Y, B/Y	Y				

G-2

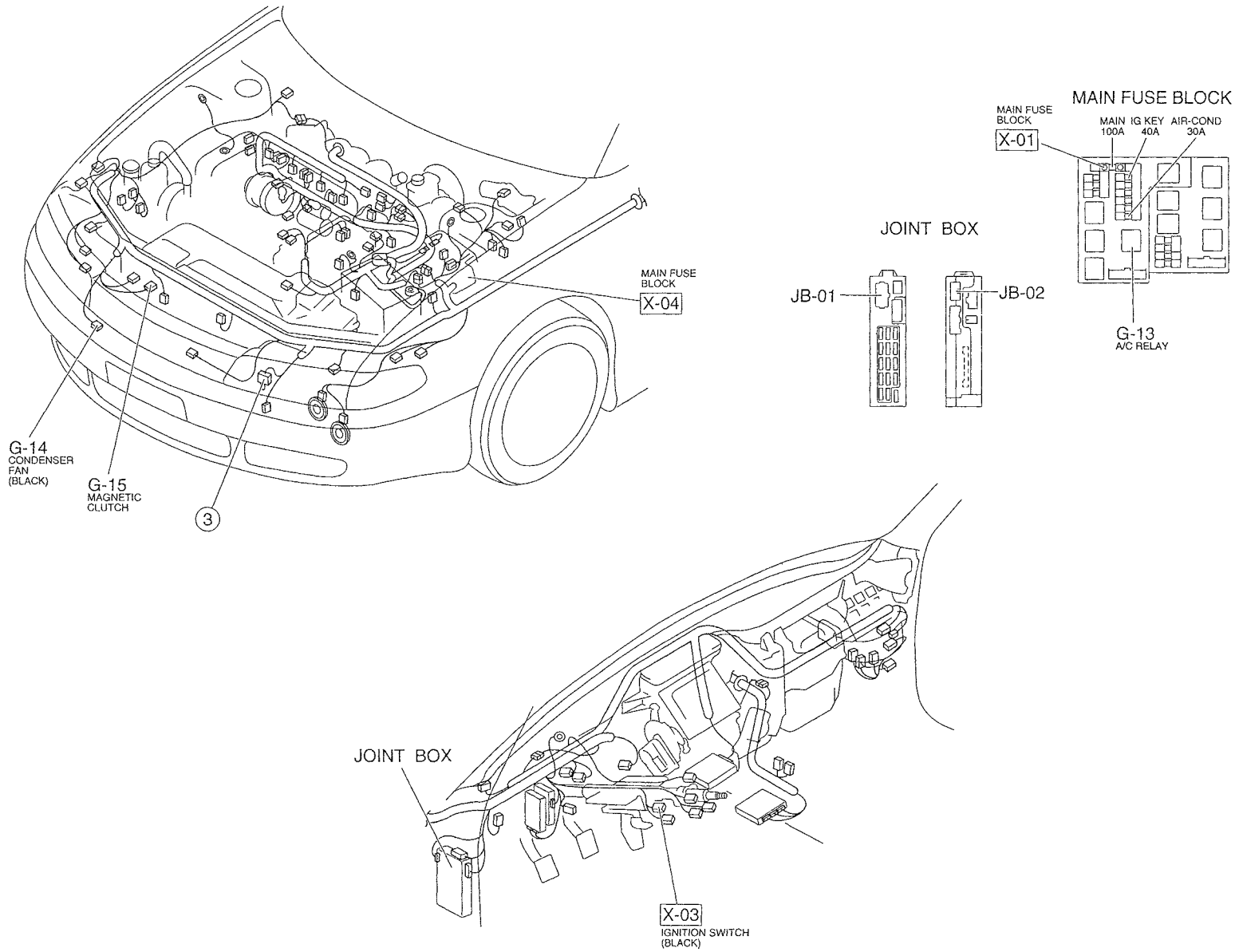
MAIN FUSE BLOCK
MAIN FUSE BLOCK
X-01
MAIN 100A
IG KEY 40A
AIR-COND 30A
G-13
A/C RELAY
JOINT BOX
JB-01
JB-02
MAIN FUSE BLOCK
X-04
G-14
CONDENSER FAN (BLACK)
G-15
MAGNETIC CLUTCH
3
JOINT BOX
X-03
IGNITION SWITCH (BLACK)

Condenser Fan System (KL) Circuit Diagram

G-3 KL ■CONDENSER FAN SYSTEM

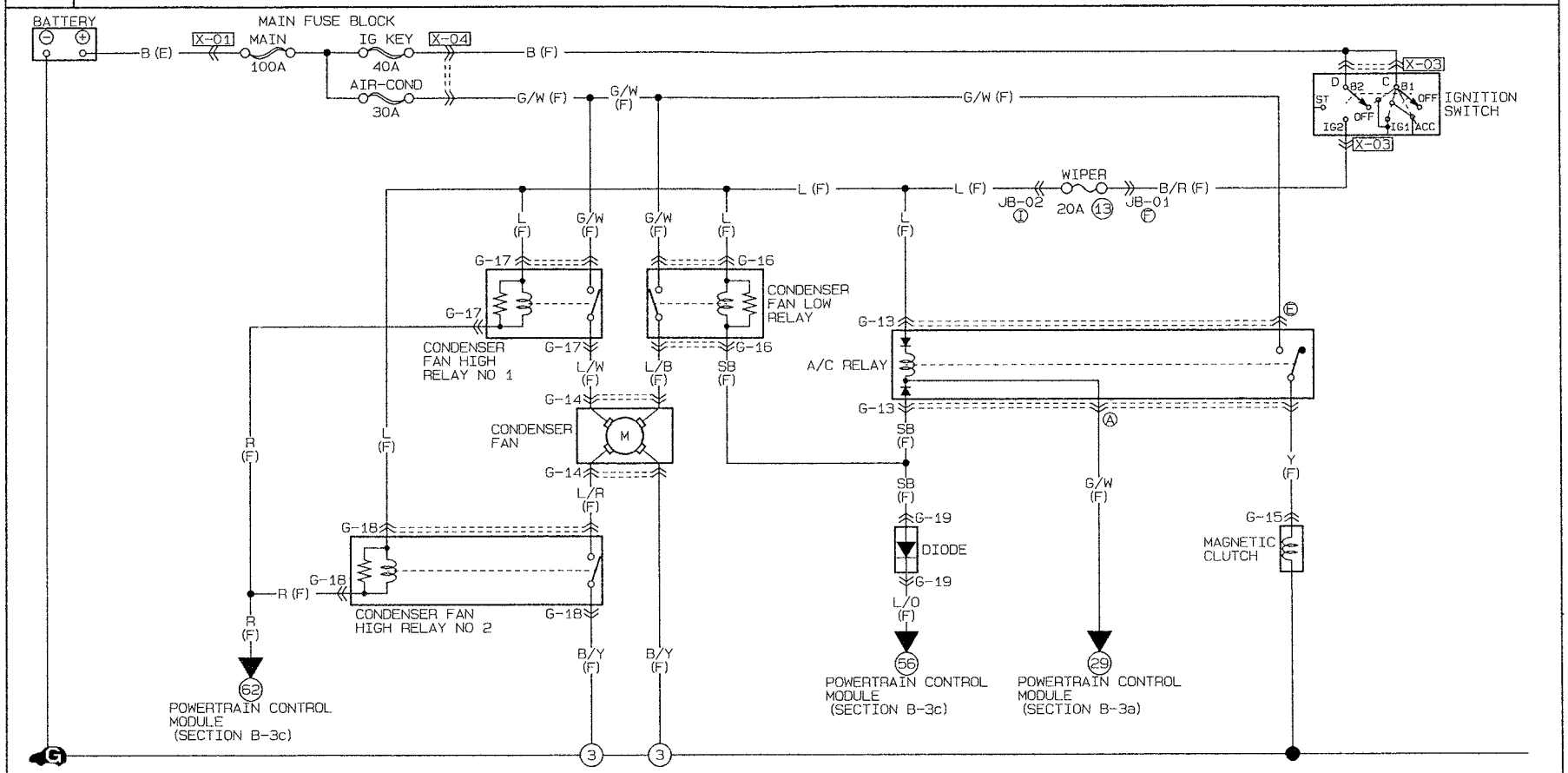

G-13 A/C RELAY (F)	G-14 CONDENSER FAN (F)	G-15 MAGNETIC CLUTCH (F)	G-16 CONDENSER FAN LOW RELAY (F)	G-17 CONDENSER FAN HIGH RELAY NO 1 (F)	G-18 CONDENSER FAN HIGH RELAY NO 2 (F)	G-19 DIODE (F)
Ⓔ: G/W, Y, G/W *, L, SB Ⓐ: G/W, Y, G/W	L/W, L/B L/R, B/Y	Y	G/W, L L/B, SB	G/W, L L/W, R	L/R, L B/Y, R	SB L/O

G-3

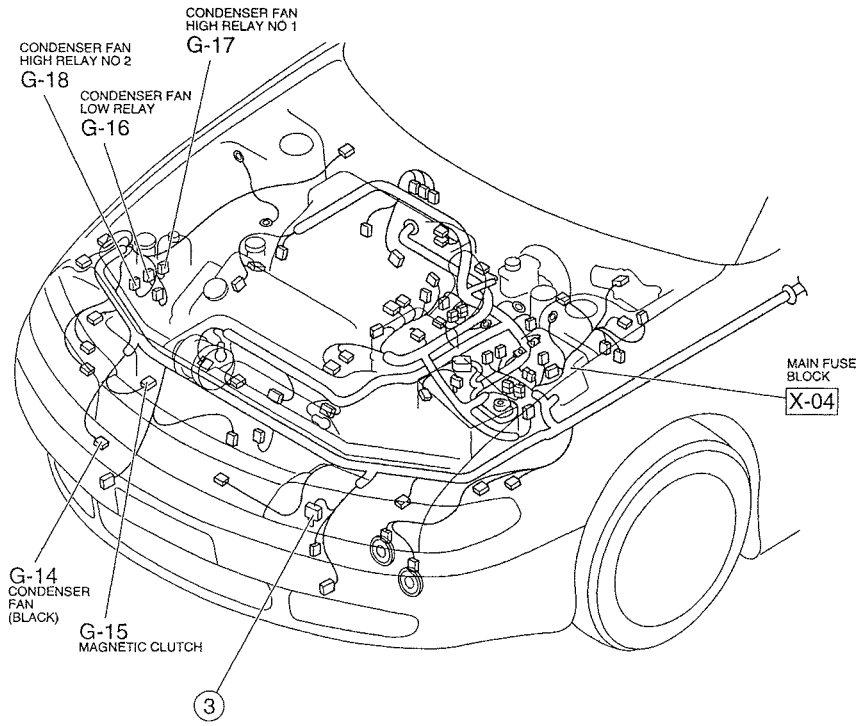
CONDENSER FAN HIGH RELAY NO 1
G-17
CONDENSER FAN HIGH RELAY NO 2
G-18
CONDENSER FAN LOW RELAY
G-16
MAIN FUSE BLOCK
X-04
G-14
CONDENSER FAN (BLACK)
G-15
MAGNETIC CLUTCH
3

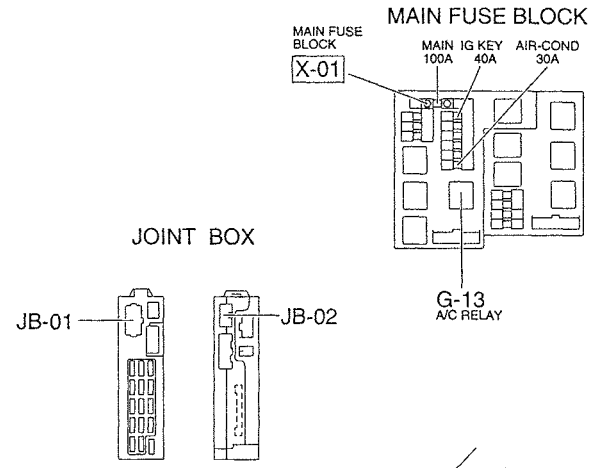
MAIN FUSE BLOCK
MAIN FUSE BLOCK
X-01
MAIN 100A
IG KEY 40A
AIR-COND 30A
G-13
A/C RELAY
JOINT BOX
JB-01
JB-02

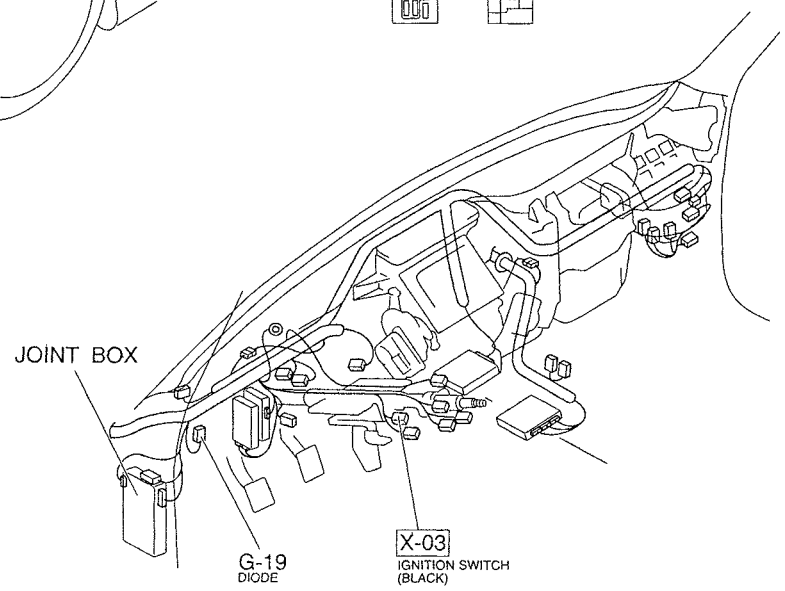
JOINT BOX
G-19
DIODE
X-03
IGNITION SWITCH (BLACK)

FLOWCHART

Flowchart No.	Symptom ..... Blower motor does not operate at any fan switch position
1	Related components ..... Blower motor, resistor, fan switch, wiring harness

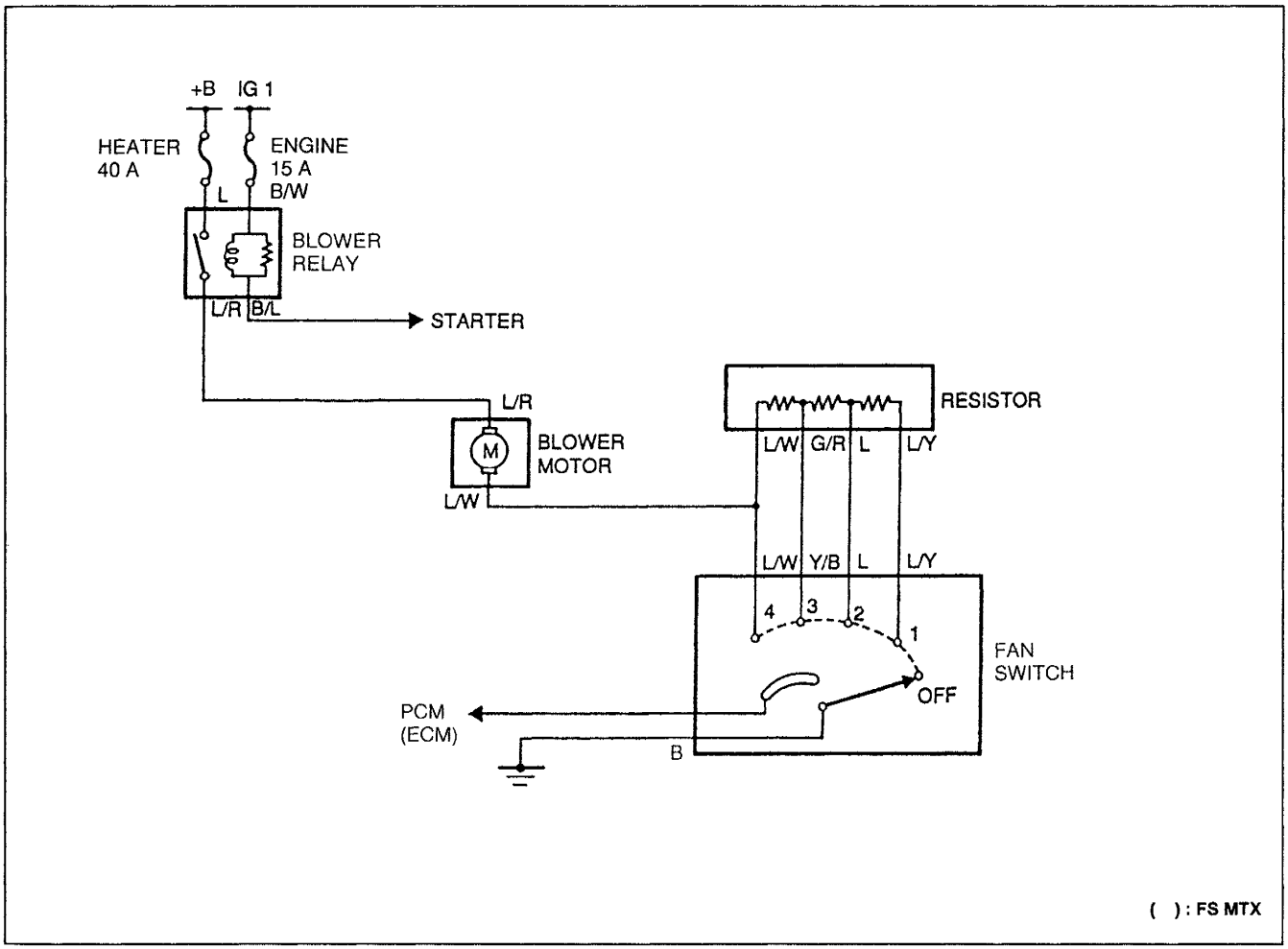

System Operation

Blower motor speed is controlled by the fan switch and a resistor in the blower unit. When the fan switch is at OFF, the motor ground circuit is open and the blower motor does not operate. When the switch is in the first position, current flow from the blower motor is restricted by the resistor, and the blower motor turns at low speed.

Changing the fan switch to the second, third, or fourth positions causes the circuit resistance to decrease and the blower motor speed to increase.

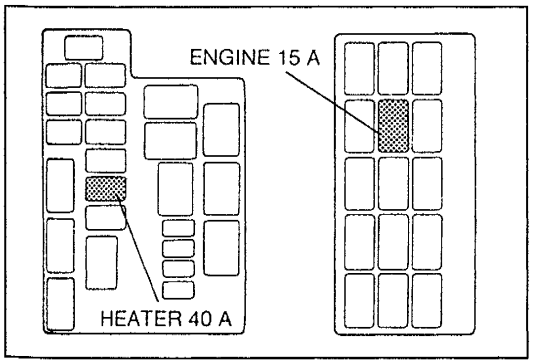

Step 1

1. Check the following fuses.

Fuse	Amperage	Location
HEATER	40 A	Main fuse block
ENGINE	15 A	Fuse block

2. If the fuses are OK, go to Step 2.
3. If a fuse is burnt, check for a short-circuit in the harness before replacing the fuse.

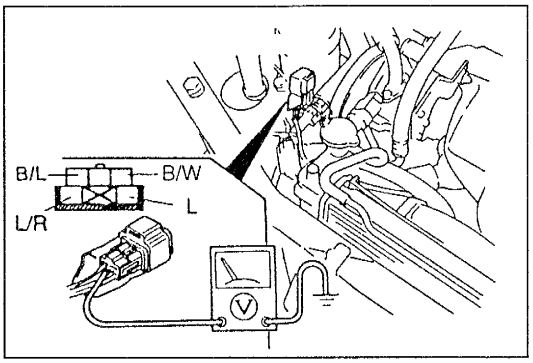

Step 2

1. Turn the ignition switch to ON.
2. Set the fan switch to the fourth position.
3. Measure the voltage at the following terminal wires of the blower relay connector.

B+: Battery positive voltage

Wire	Voltage	Action
(B/W)	B+	Measure voltage at (L) wire
	Other	Repair wiring harness (ENGINE 15 A fuse—Blower relay)
(L)	B+	Measure voltage at (B/L) wire
	Other	Repair wiring harness (HEATER 40 A fuse—Blower relay)
(B/L)	Other	Measure voltage at (L/R) wire
	B+	Repair wiring harness (Blower relay—Starter) or check starting system
(L/R)	B+	Repair wiring harness (Blower relay—Blower motor)
	Other	Replace blower relay

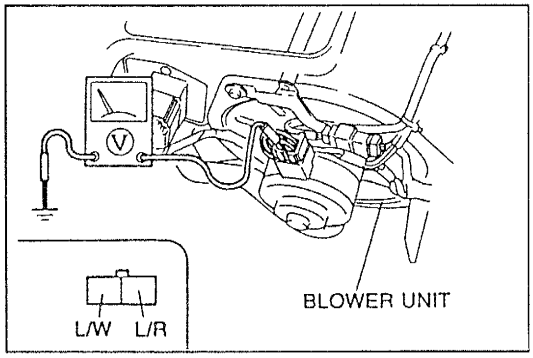

Step 3

1. Verify that the ignition switch is at ON and that the fan switch is in the fourth position.
2. Measure the voltage at the following terminal wires of the blower motor connector.

B+: Battery positive voltage

Wire	Voltage	Action
(L/R)	B+	Measure voltage at (L/W) wire
	Other	Repair wiring harness (Blower relay—Blower motor)
(L/W)	B+	Go to Step 4
	Other	Replace blower motor

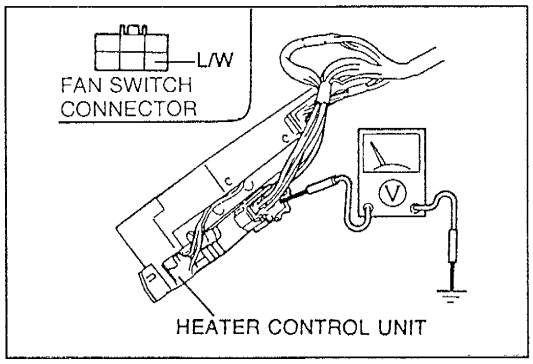

Step 4

1. Verify that the ignition switch is at ON.
2. Turn the fan switch off.
3. Measure the voltage at the (L/W) terminal wire of the fan switch.

B+: Battery positive voltage

Voltage	Action
B+	Go to Step 5
Other	Repair wiring harness (Blower motor—Fan switch)

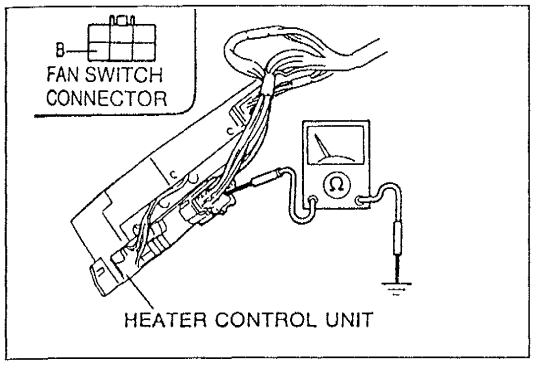

Step 5

1. Disconnect the fan switch connector.
2. Check for continuity between the (B) terminal wire of the fan switch connector and ground.

Continuity	Action
Yes	Replace fan switch
No	Replace wiring harness (Fan switch—GND)

Flowchart No.	
2	Symptom ..... Blower motor does not operate when fan switch is at 1st, 2nd, 3rd, or 4th position Related components ..... Resistor, fan switch, wiring harness

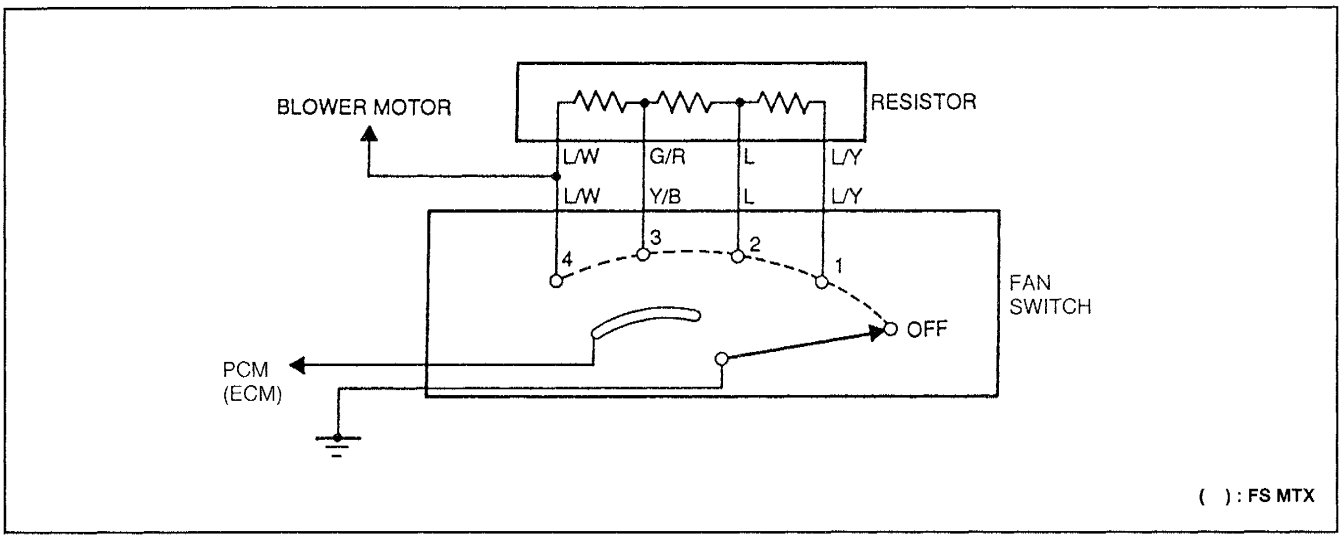

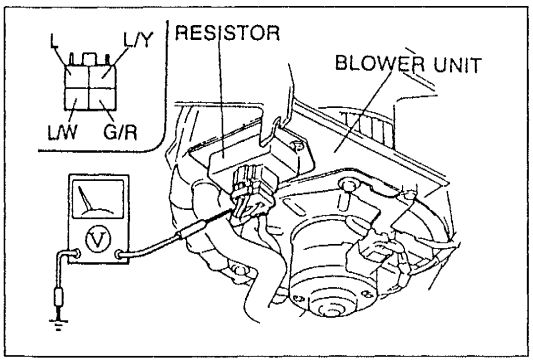

Step 1

1. Turn the ignition switch to ON.
2. Verify that the fan switch and A/C switch are off.
3. Measure the voltage at the following terminal wires of the resistor.

B+: Battery positive voltage

Wire	Voltage	Action
(L/W)	B+	Measure voltage at (G/R) wire
	Other	Replace resistor
(G/R)	B+	Measure voltage at (L) wire
	Other	Replace resistor
(L)	B+	Measure voltage at (L/Y) wire
	Other	Replace resistor
(L/Y)	B+	Go to Step 2
	Other	Replace resistor

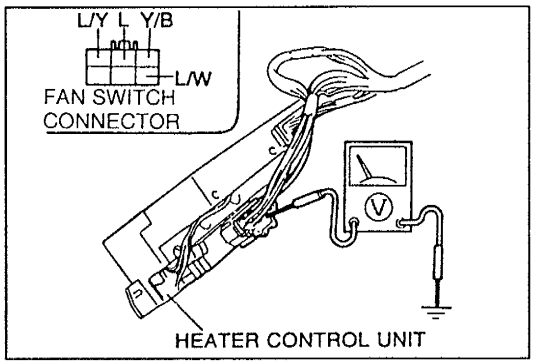

Step 2

1. Verify that the ignition switch is at ON.
2. Verify that the fan switch and A/C switch are off.
3. Measure the voltage at the following terminal wires of the fan switch connector.

B+: Battery positive voltage

Wire	Voltage	Action
(L/W)	B+	Measure voltage at (Y/B) wire
	Other	Repair wiring harness (Resistor—Fan switch)
(Y/B)	B+	Measure voltage at (L) wire
	Other	Repair wiring harness (Resistor—Fan switch)
(L)	B+	Measure voltage at (L/Y) wire
	Other	Repair wiring harness (Resistor—Fan switch)
(L/Y)	B+	Replace fan switch
	Other	Repair wiring harness (Resistor—Fan switch)

Flowchart No.	Symptom ..... Magnetic clutch and condenser fan do not operate (FS engine)
3	Related components ..... Fuses, A/C amplifier, A/C switch, A/C relay, PCM, (ECM: MTX) refrigerant pressure switch, wiring harness

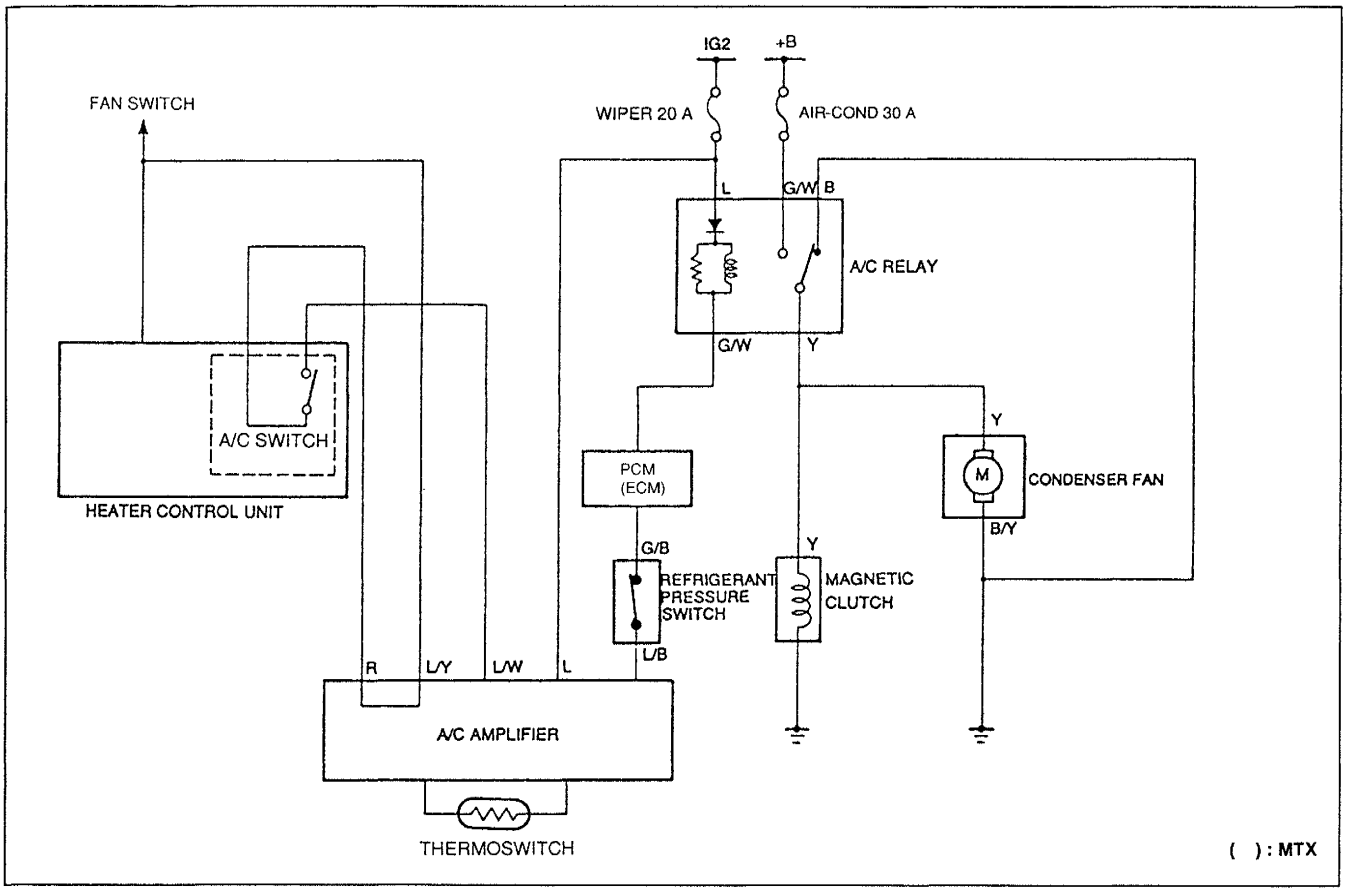

System Operation

1. Signals from the fan switch and A/C switch are sent to the A/C amplifier.
2. The thermoswitch resistance changes as the evaporator's temperature changes.
3. The A/C amplifier monitors the thermoswitch resistance changes.
4. The A/C amplifier signals the PCM (ECM: MTX) to turn the magnetic clutch on or off based on the evaporator's temperature. This protects the evaporator from freezing.
5. The PCM (ECM: MTX) controls the magnetic clutch by turning the A/C relay on or off.
6. To help liquefy the refrigerant, the condenser fan rotates to increase airflow through the condenser when the A/C compressor is on.
7. If the refrigerant pressure switch is broken or there is abnormal pressure in the refrigerant system, the refrigerant pressure switch will remain open and not allow current to flow to the magnetic clutch and condenser fan.

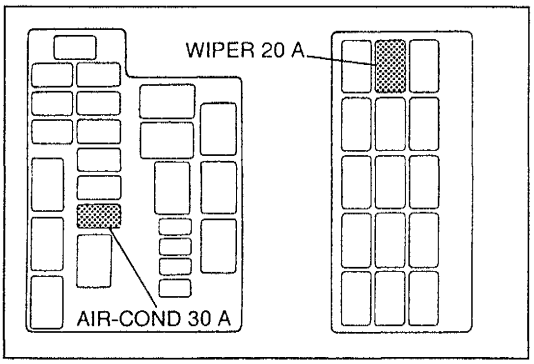

Step 1

1. Check the following fuses.

Fuse	Amperage	Location
AIR-COND	30 A	Main fuse block
WIPER	20 A	Fuse block

2. If the fuses are OK, go to Step 2.
3. If a fuse is burnt, check for a short–circuit in the wiring harness before replacing the fuse.

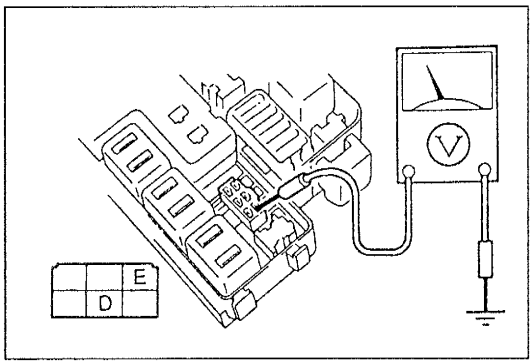

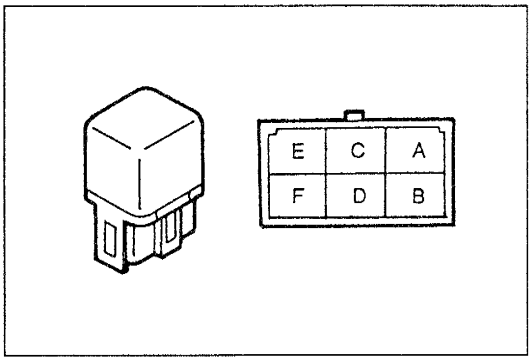

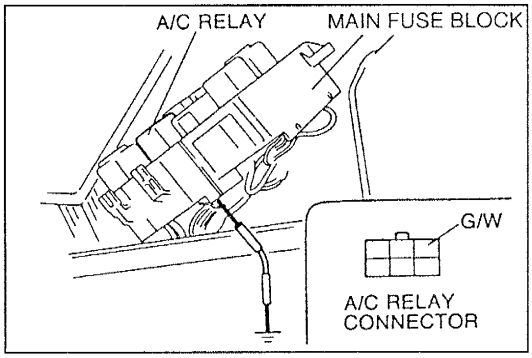

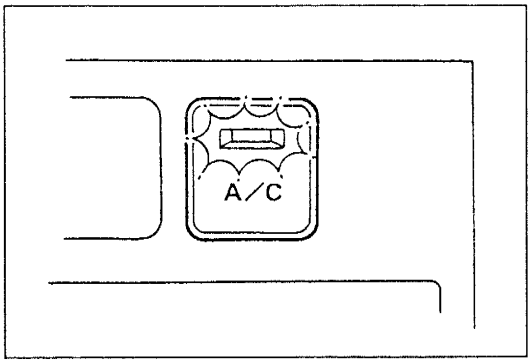

Step 2

1. Remove the A/C relay.
2. Turn the ignition switch to ON.
3. Measure the voltage at the following terminal wires of the A/C relay connector.

B+: Battery positive voltage

Wire	Voltage	Action
(L)	B+	Measure voltage at (G/W) wire
	Other	Repair wiring harness (A/C relay—WIPER 20 A fuse)
(G/W) Terminal E	B+	Go to Step 3
	Other	Repair wiring harness (A/C relay—AIR-COND 30 A fuse)

Step 3

1. Connect battery positive voltage and check for continuity between the terminals of the A/C relay.

○–○ : Continuity ○–◀–○ : Diode B+: Battery positive voltage

Connection		Terminal					
B+	GND	D	A	B	C	E	F
—	—	○–▶|–○	○–|◀–○		○–▶|–○	○–○	○
D	A				○	○	

2. If correct, reinstall the A/C relay and go to Step 4.
3. If not as specified, replace the A/C relay.

Step 4

1. Remove the front console. (Refer to the 1996 626/MX-6 Workshop Manual, section S.)
2. Disconnect the appropriate PCM (ECM: MTX) connector.

Transaxle	Connector
MTX	22-pin
ATX	60-pin

3. Connect a jumper wire between the terminal wire (G/W) of the A/C relay connector and ground.
4. Turn the ignition switch to ON, and verify that the magnetic clutch and condenser fan operate.

Magnetic clutch and condenser fan	Action
Operate	Remove jumper wire, reconnect PCM (ECM: MTX) connector, and go to Step 5
Do not operate	Repair wiring harness (A/C relay—Magnetic clutch, condenser fan)

Step 5

1. Turn the A/C switch on and set the fan switch to the first position.
2. Verify that the A/C switch indicator light illuminates.

Indicator light	Action
Illuminates	Go to Step 6
Does not illuminate	Inspect heater control unit (Refer to page G–43)

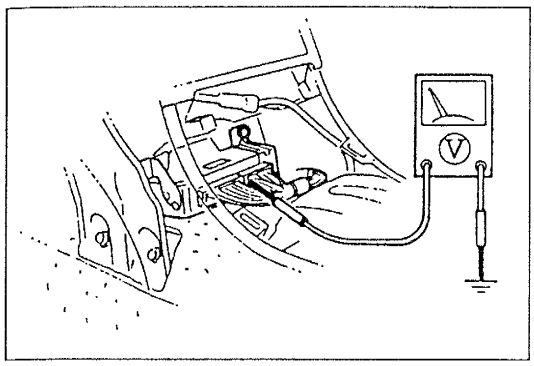

Step 6

Measure the voltage at the following terminal wires of the PCM (ECM: MTX) connector.
(Refer to section F1, F3)

FS engine (MTX)

Wire	Voltage	Action
(G/W) Terminal 1G	0V	Repair wiring harness (ECM—A/C relay)
	Other	Measure voltage at (G/B) wire
(G/B) Terminal 1K	0V	Inspect ECM (Refer to 1996 626/MX-6 Workshop Manual, section F1)
	Other	Go to Step 7

FS engine (ATX)

Wire	Voltage	Action
(G/W) Terminal 69	0V	Repair wiring harness (PCM—A/C relay)
	Other	Measure voltage at (G/B) wire
(G/B) Terminal 41	0V	Inspect PCM (Refer to 1996 626/MX-6 Workshop Manual, section F3)
	Other	Go to Step 7

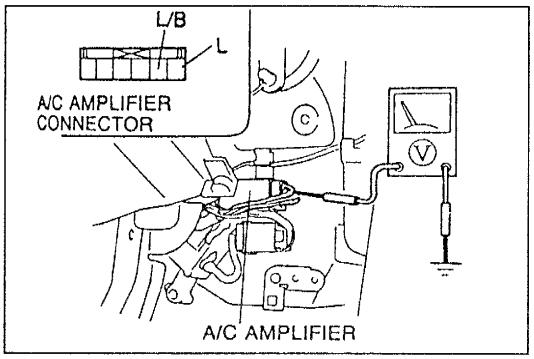

Step 7

Measure the voltage at the following terminal wires of the A/C amplifier.

B+: Battery positive voltage

Wire	Voltage	Action
(L)	B+	Measure voltage at (L/B) wire
	Other	Repair wiring harness (WIPER 20 A fuse—A/C amplifier)
(L/B)	0V	Replace A/C amplifier (Refer to page G–65)
	Other	Inspect refrigerant pressure switch (Refer to page G–60) or check wiring harness (PCM—Refrigerant pressure switch—A/C amplifier)

Flowchart No.	Symptom ..... Magnetic clutch does not operate (condenser fan operates normally) (KL engine)
4	Related components ..... Magnetic clutch, wiring harness, refrigerant system

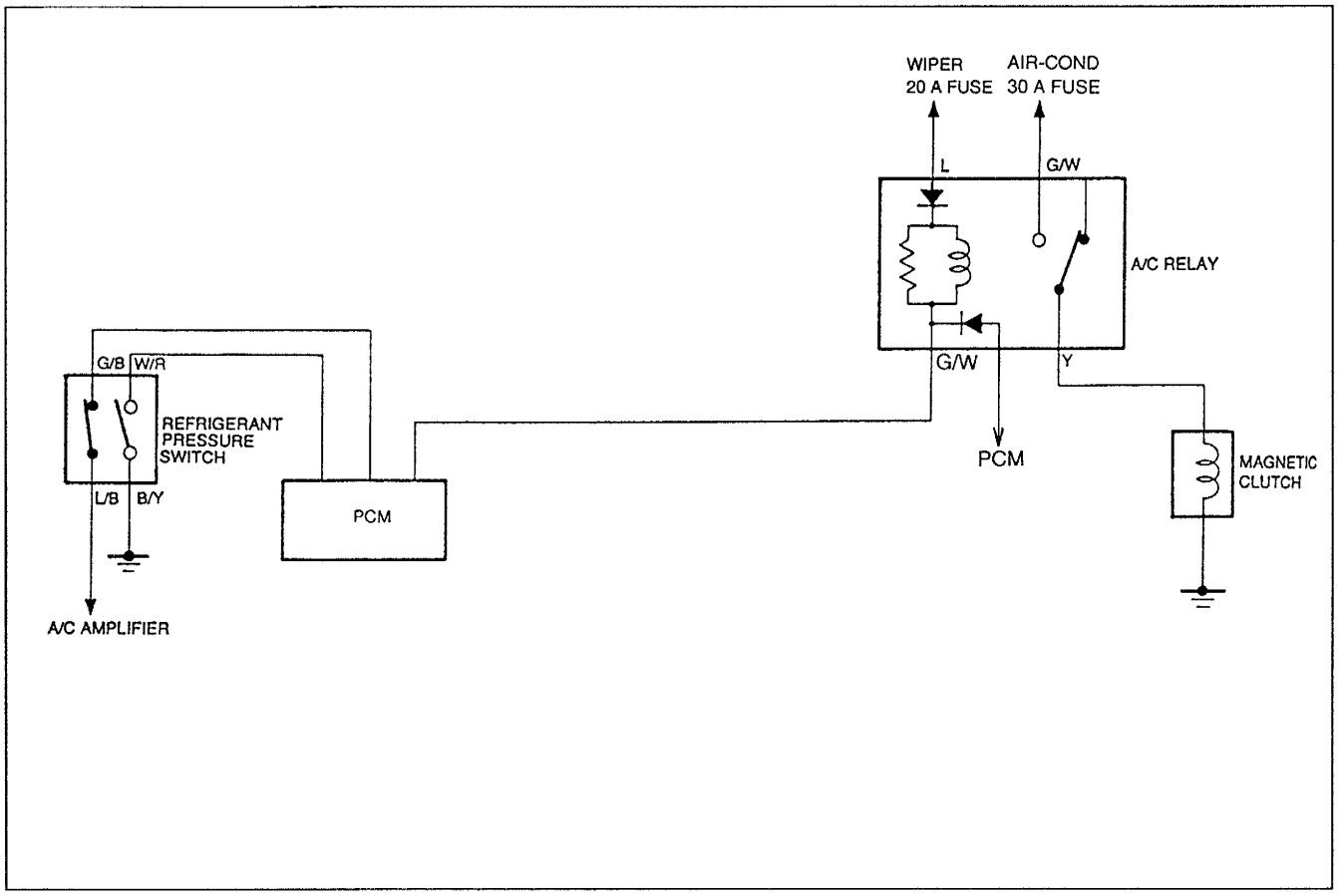

System Operation

1. Signals from the fan switch and A/C switch are sent to the A/C amplifier.
2. The evaporator temperature sensor resistance changes as the evaporator's temperature changes.
3. The A/C amplifier monitors the evaporator temperature sensor's resistance changes.
4. The A/C amplifier signals the PCM to turn the magnetic clutch on or off based on the evaporator's temperature. This protects the evaporator from freezing.
5. The PCM controls the magnetic clutch by turning the A/C relay on and off.
6. To help liquefy refrigerant, the condenser fan rotates to increase airflow through the condenser when the A/C compressor is on.

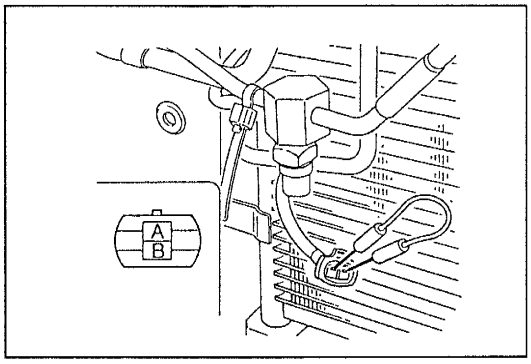

Step 1

1. Turn the ignition switch to LOCK and disconnect the refrigerant pressure switch connector.
2. Connect a jumper wire between terminals A and B of the refrigerant pressure switch connector.
3. Start the engine.
4. Turn the fan switch and A/C switch on, and check the magnetic clutch operation.

Magnetic clutch	Action
Operates	Go to Step 2
Does not operate	Remove jumper wire, reconnect refrigerant pressure switch connector, and go to Step 3

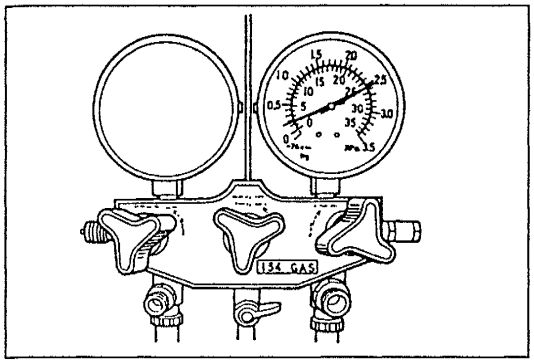

Step 2

1. Connect a manifold gauge set to the charging valves. (Refer to page G–45.)
2. Measure the high-pressure-side pressure.

Refrigerant pressure	Action
210—2,540 kPa {2.1—26.0 kgf/cm², 30—369 psi}	Replace refrigerant pressure switch (Refer to page G–60)
Other	Perform leak test (Refer to page G–46)

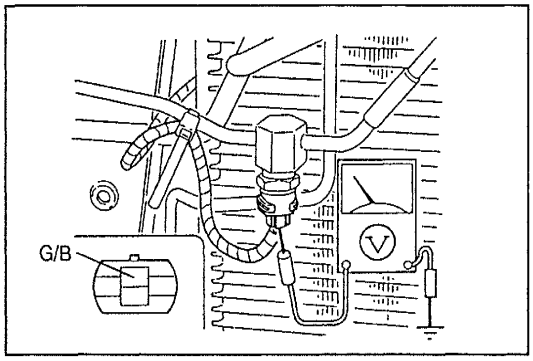

Step 3

1. Verify that the ignition switch, fan switch, and A/C switch are on.
2. Measure the voltage at the (G/B) terminal wire of the refrigerant pressure switch connector.

B+: Battery positive voltage

Voltage	Action
B+	Go to Step 4
Other	Go to Step 5

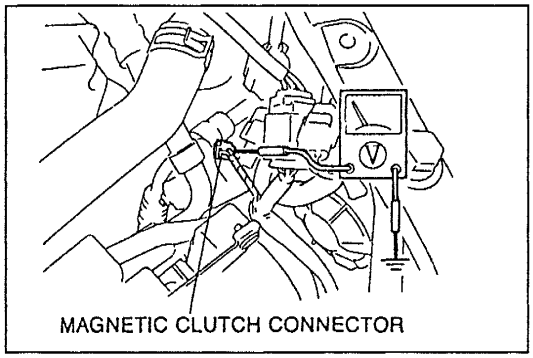

Step4

Measure the voltage at the (Y) terminal wire of the magnetic clutch connector.

B+: Battery positive voltage

Voltage	Action
B+	Go to Step 5
Other	Repair wiring harness (A/C relay—Magnetic clutch)

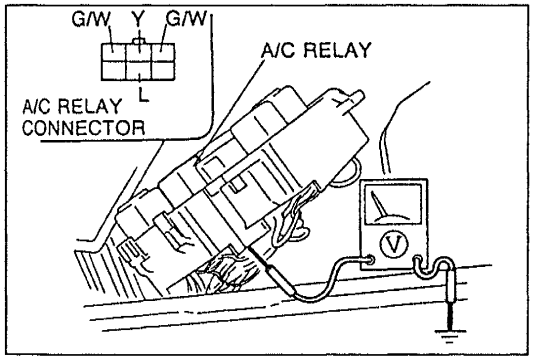

Step 5

Measure the voltage at following terminal wires of the A/C relay connector.

B+: Battery positive voltage

Wire	Voltage	Action
(L)	B+	Measure voltage at terminal A (G/W)
	Other	Repair wiring harness (WIPER 20 A fuse—A/C relay)
Terminal A (G/W)	0V	Measure voltage at terminal E (G/W)
	Other	Repair wiring harness (PCM—A/C relay)
Terminal E (G/W)	B+	Measure voltage at (Y) wire
	Other	Repair wiring harness (AIR-COND 30 A fuse—A/C relay)
(Y)	0V	Replace A/C relay
	Other	Inspect magnetic clutch (Refer to page G–57)

Flowchart No.	Symptom ..... Magnetic clutch does not operate (condenser fan operates normally) (FS engine)
5	Related components ..... Magnetic clutch, wiring harness

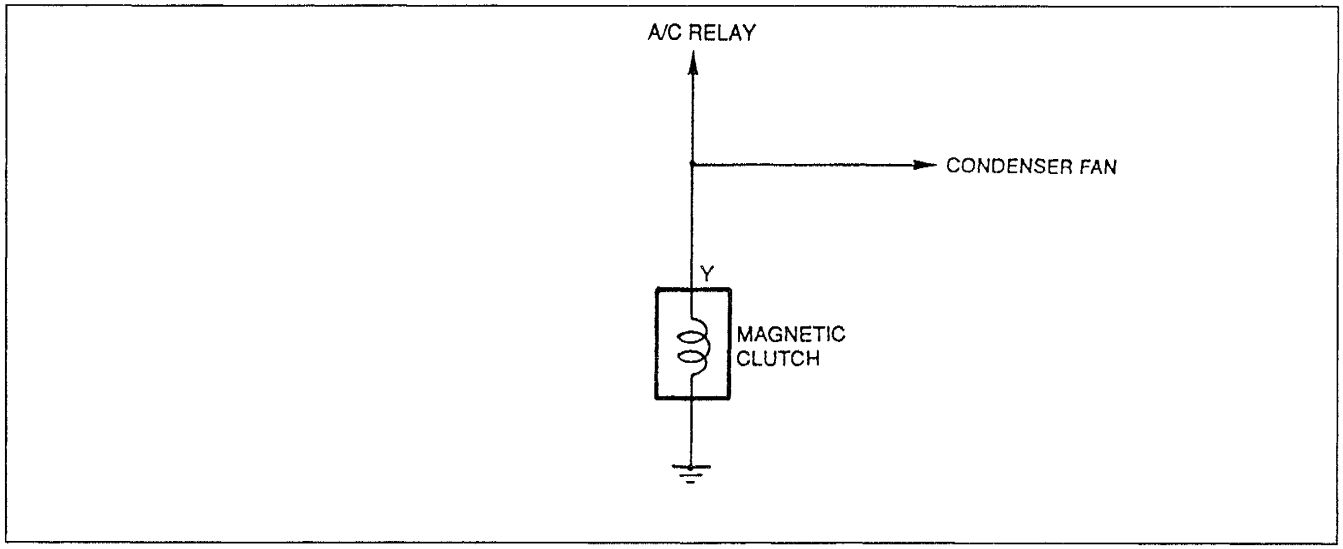

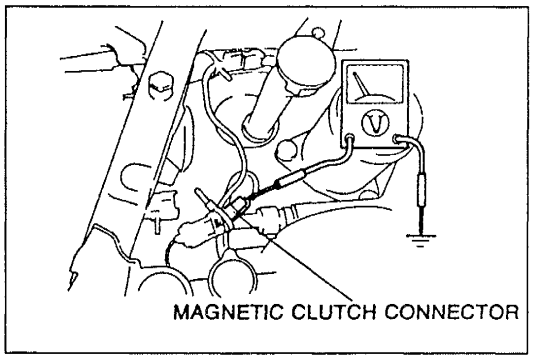

Remedy

1. Turn the ignition switch to ON.
2. Measure the voltage at the (Y) terminal wire of the magnetic clutch connector.

B+: Battery positive voltage

Voltage	Action
B+	Replace magnetic clutch (Refer to page G–57)
Other	Repair wiring harness (Magnetic clutch—A/C relay)

Flowchart No.	Symptom ..... Condenser fan does not operate (magnetic clutch operates normally) (KL engine)
6	Related components ..... Condenser fan, wiring harness, condenser fan low relay

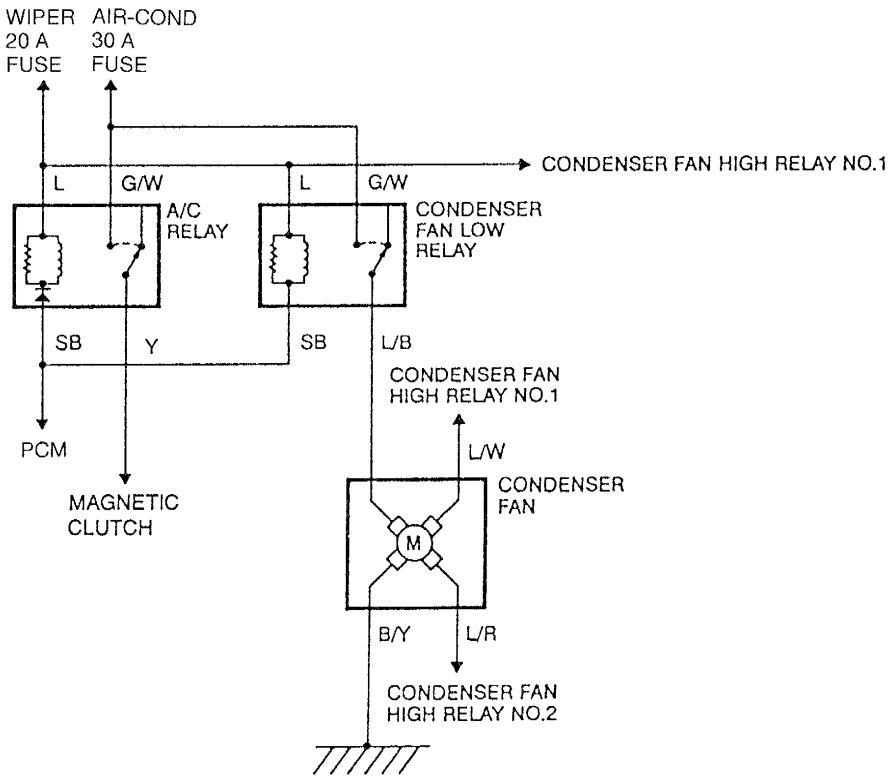

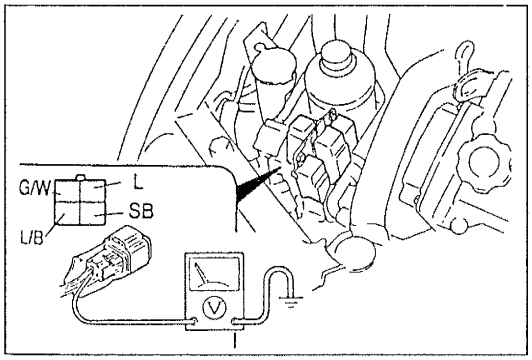

Step 1

1. Start the engine.
2. Turn the fan switch and A/C switch on.
3. Measure the voltage at the following terminal wires of the condenser fan low relay connector.

B+: Battery positive voltage

Wire	Voltage	Action
(L)	B+	Measure voltage at (SB) wire
	Other	Repair wiring harness (WIPER 20 A fuse—Condenser fan low relay)
(SB)	0V	Measure voltage at (G/W) wire
	Other	Repair wiring harness (Condenser fan low relay—PCM)
(G/W)	B+	Measure voltage at (L/B) wire
	Other	Repair wiring harness (AIR-COND 30 A fuse—Condenser fan low relay)
(L/B)	B+	Go to Step 2
	Other	Replace condenser fan low relay

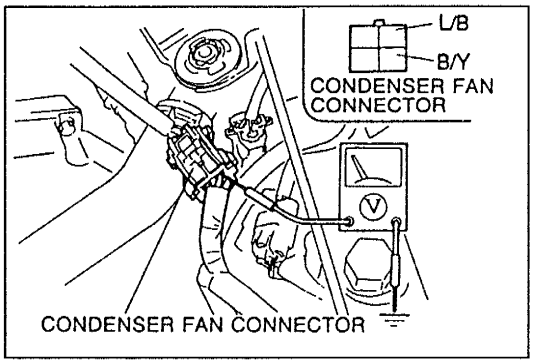

Step 2

Measure the voltage at the following terminal wires of the condenser fan connector.

B+: Battery positive voltage

Wire	Voltage	Action
(L/B)	B+	Measure voltage at (B/Y) wire
	Other	Repair wiring harness (Condenser fan low relay—Condenser fan)
(B/Y)	B+	Repair wiring harness (Condenser fan—GND)
	Other	Replace condenser fan

Flowchart No.	
7	Symptom ..... Condenser fan does not operate (magnetic clutch operates normally) (FS engine)
	Related components ..... Condenser fan, wiring harness

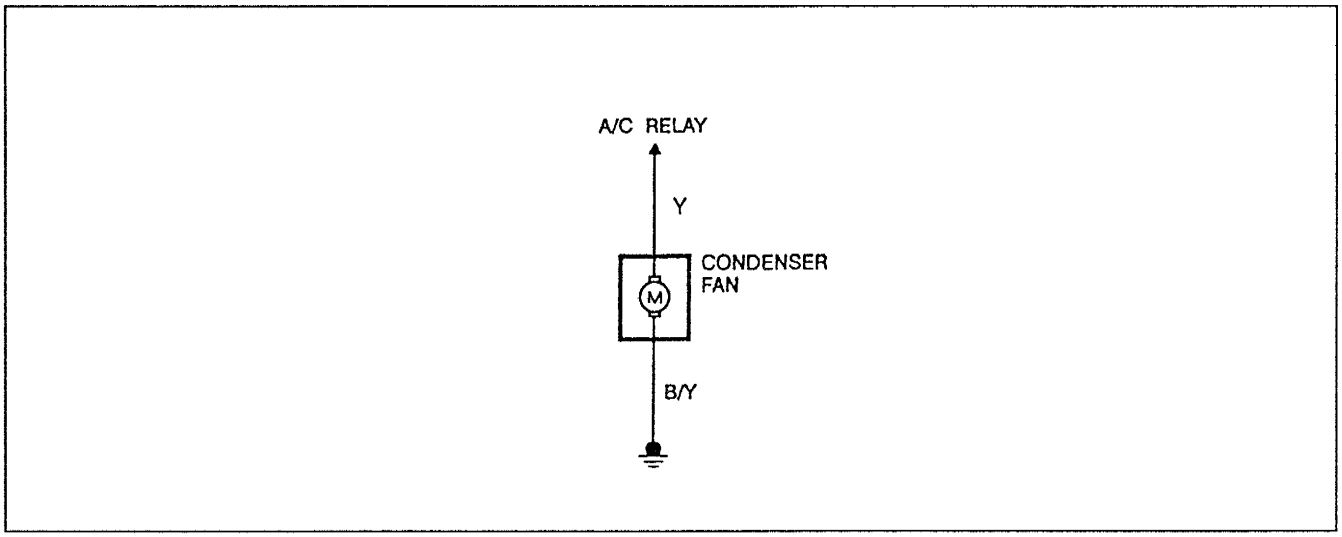

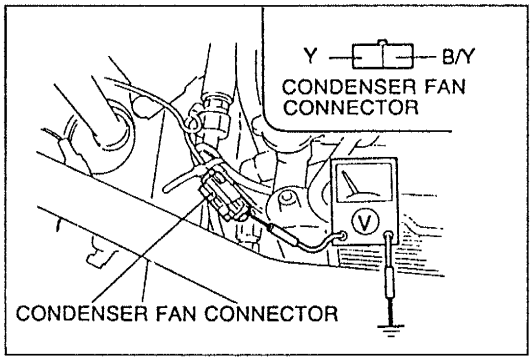

Remedy

1. Start the engine.
2. Turn the fan switch and A/C switch on.
3. Measure the voltage at the following terminal wires of the condenser fan connector.

B+: Battery positive voltage

Wire	Voltage	Action
(Y)	B+	Measure voltage at (B/Y) wire
	Other	Repair wiring harness (A/C relay—Condenser fan)
(B/Y)	0V	Replace condenser fan
	B+	Repair wiring harness (Condenser fan—GND)

Flowchart No.	Symptom ..... Airflow mode does not change Related components ..... Airflow mode actuator, heater control unit, wiring harness
8	

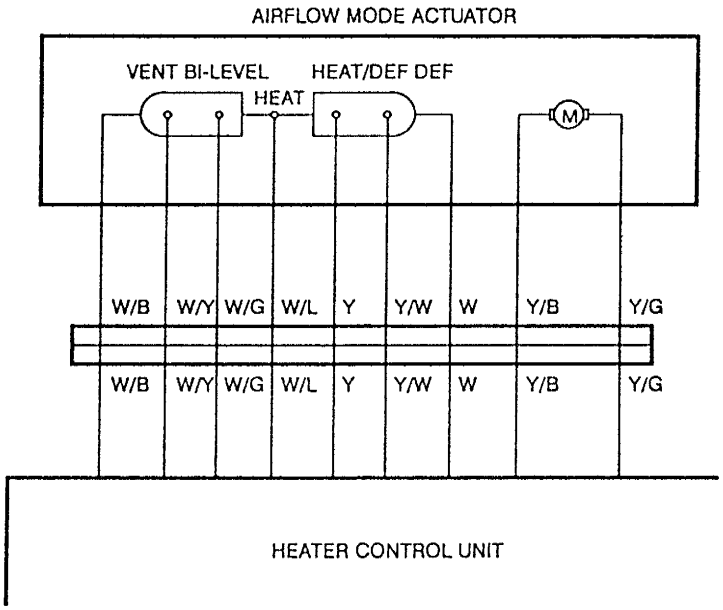

Airflow mode actuator

The airflow mode actuator opens and closes the airflow mode doors by means of heater control signals and the link rod. It is equipped with sliding contacts to set the stopping position.

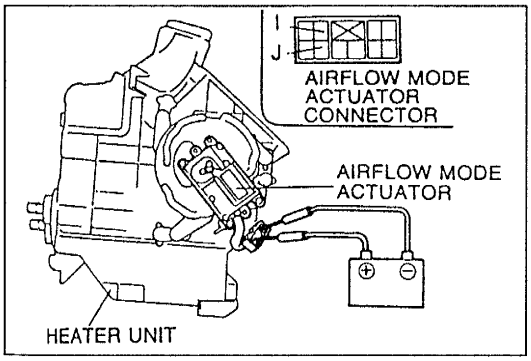

Step 1

1. Disconnect the airflow mode actuator connector.
2. Connect battery positive voltage to the terminals I and J of the airflow mode actuator, and check the actuator operation.

B+: Battery positive voltage

Connection		Operation
B+	GND	
J	I	VENT to DEF
I	J	DEF to VENT

3. If correct, go to Step 2.
4. If not as specified, replace the airflow mode actuator. (Refer to page G–37.)

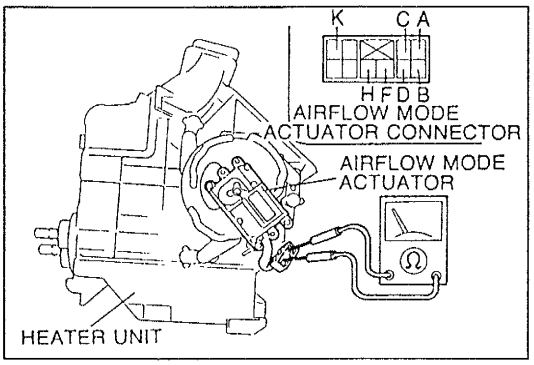

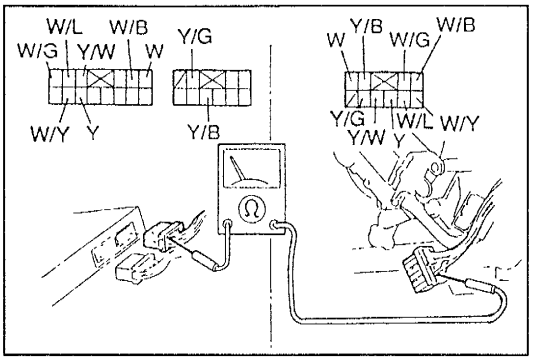

Step 2

1. Check for continuity between the terminals of the airflow mode actuator for each mode.

○–○ : Continuity

Airflow mode	Terminal						
	A	B	C	D	F	H	K
VENT			○	○	○	○	○
BI-LEVEL	○	○		○	○	○	○
HEAT	○	○	○		○	○	○
HEAT/DEF	○	○	○	○		○	○
DEF	○	○	○	○	○		

2. If correct, go to Step 3.
3. If not as specified, replace the airflow mode actuator.

Step 3

1. Disconnect the airflow mode actuator connector and heater control unit connectors.
2. Check for continuity at the following wires between the connectors.

Wire	Action if no continuity	Action if continuity
(W)	Repair (W) wire	Check (W/B) wire
(W/B)	Repair (W/B) wire	Check (W/Y) wire
(W/Y)	Repair (W/Y) wire	Check (W/G) wire
(W/G)	Repair (W/G) wire	Check (W/L) wire
(W/L)	Repair (W/L) wire	Check (Y) wire
(Y)	Repair (Y) wire	Check (Y/W) wire
(Y/W)	Repair (Y/W) wire	Check (Y/B) wire
(Y/B)	Repair (Y/B) wire	Check (Y/G) wire
(Y/G)	Repair (Y/G) wire	Replace heater control unit

Flowchart No.	Symptom ..... Intake air mode does not change
9	Related components ..... Air intake actuator, heater control unit, wiring harness

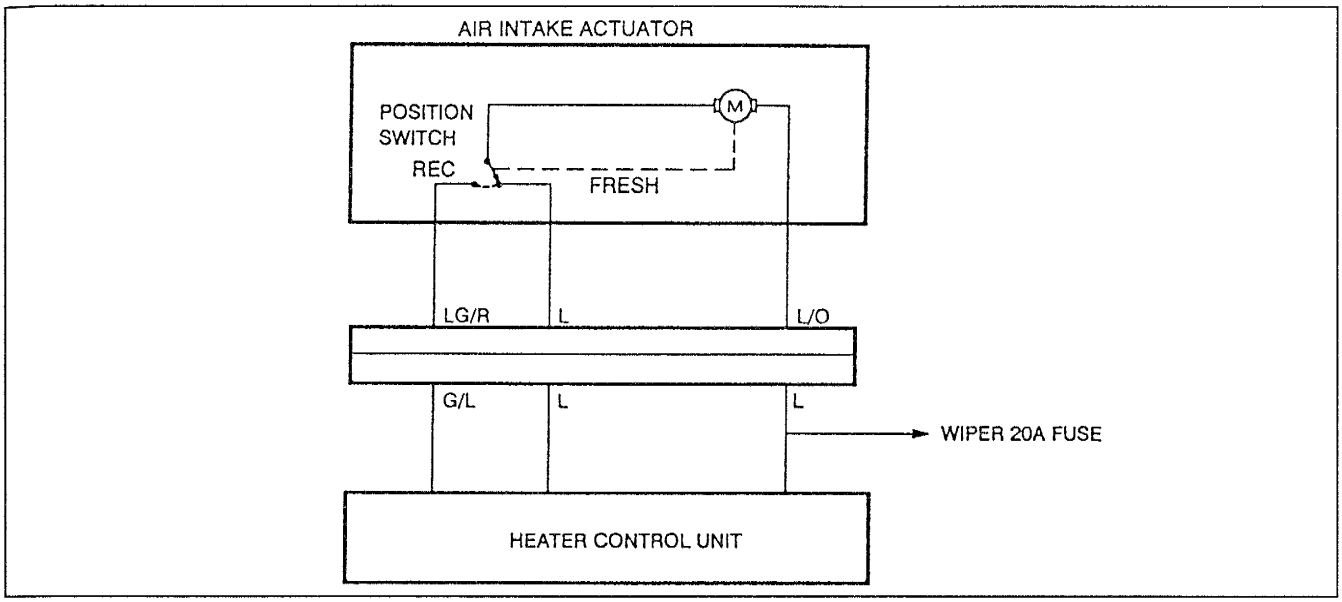

System Operation

The air intake actuator is powered by the wiper fuse. When fresh air is desired, the heater control unit grounds the air intake actuator through the (LG/R) and (G/L) terminal wires. The actuator stops running when the position switch reaches the fresh position, because the actuator's ground circuit is interrupted. When recirculated air is desired, the motor is grounded through the (L) terminal wire.

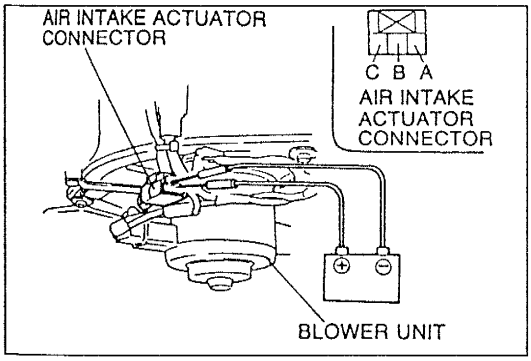

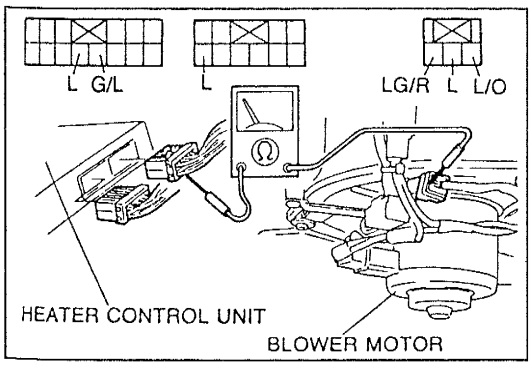

Step 1

1. Disconnect the air intake actuator connector.
2. Connect battery positive voltage to the following terminals of the air intake actuator and check the actuator operation.

B+: Battery positive voltage

Connection		Operation
B+	GND	
A	B	Fresh to Recirculation
A	C	Recirculation to Fresh

3. If correct, go to Step 2.
4. If not as specified, replace the air intake actuator. (Refer to page G–40.)

Step 2

1. Disconnect the air intake actuator connector and heater control unit connectors.
2. Check for continuity at the following wires between the connectors.

Wire		Action if no continuity	Action if continuity
Heater	Intake		
(L) (terminal 1L)	(L/O)	Repair (L)—(L/O) wire	Check (L) wire
(L) (terminal 2J)	(L)	Repair (L) wire	Check (G/L)—(LG/R) wire
(G/L)	(LG/R)	Repair (G/L)—(LG/R) wire	Replace heater control unit

Flowchart No.	Symptom ..... Airflow temperature does not change
10	Related components ..... Air mix actuator, heater control unit, wiring harness

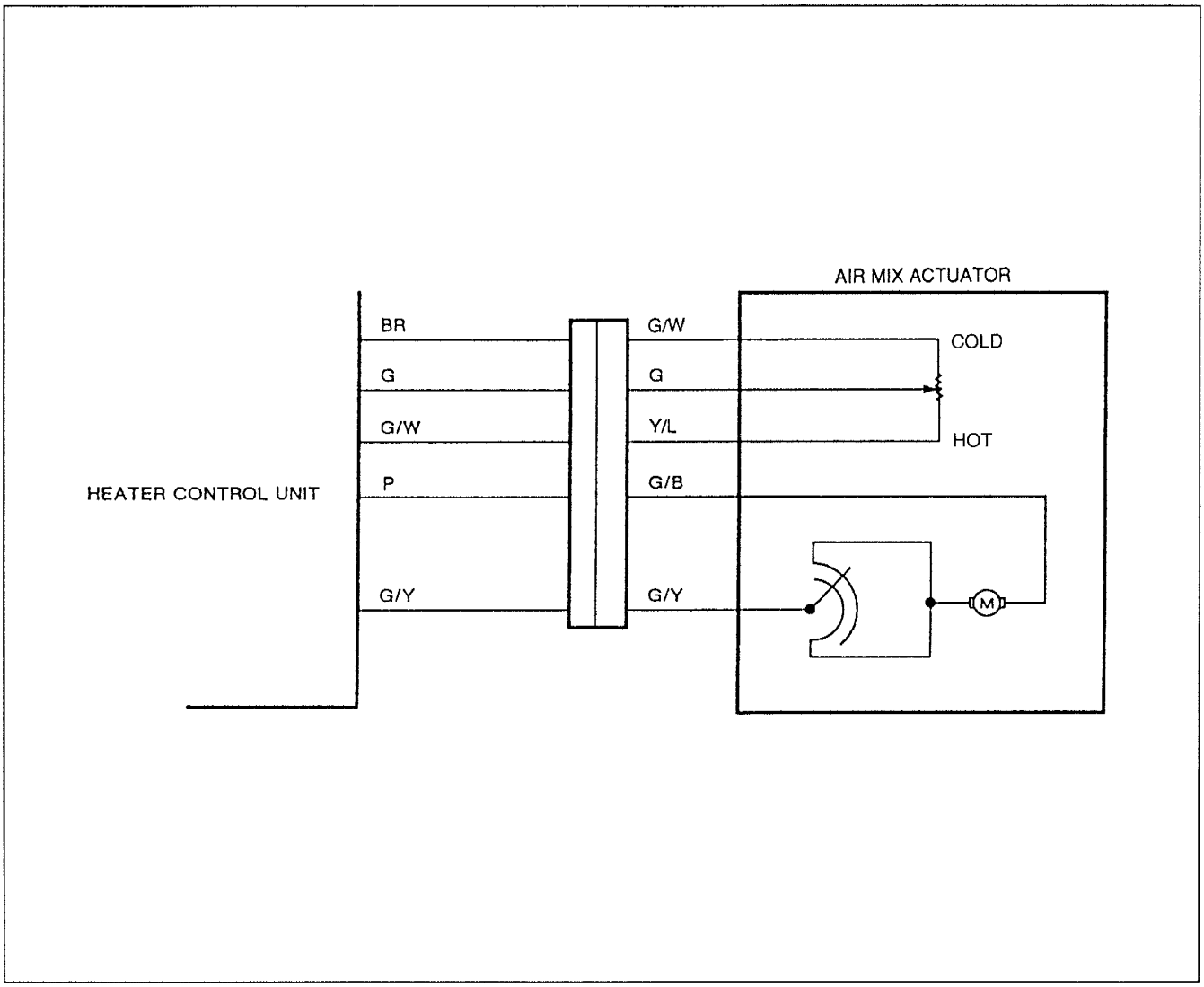

System Operation

The air mix actuator adjusts the opening of the mix door by using a link and rod mechanism.
A potentiometer attached to the link outputs a signal to the heater control unit. This signal changes as the position of the door changes. The door position is adjusted based on the temperature control lever setting on the heater control unit.

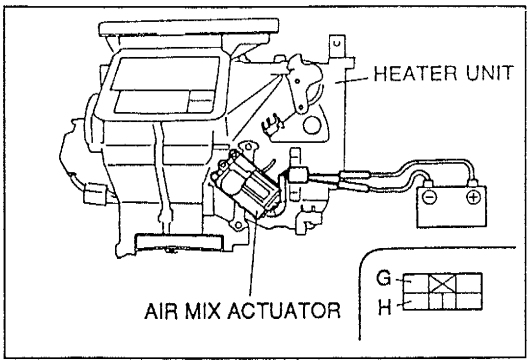

Step 1

1. Disconnect the air mix actuator connector.
2. Connect battery positive voltage to terminals G and H of the air mix actuator and check the actuator operation.

B+: Battery positive voltage

Connection		Operation
B+	GND	
G	H	Hot to Cold
H	G	Cold to Hot

3. If correct, go to Step 2.
4. If not as specified, replace the air mix actuator. (Refer to page G–37.)

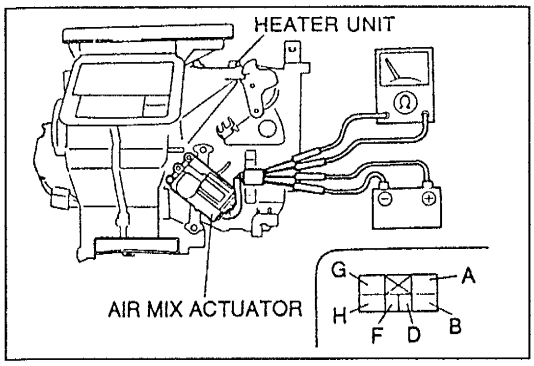

Step 2

1. Verify that the air mix actuator connector is disconnected.
2. Connect battery positive voltage to terminals G and H, and measure the resistance of the air mix actuator.

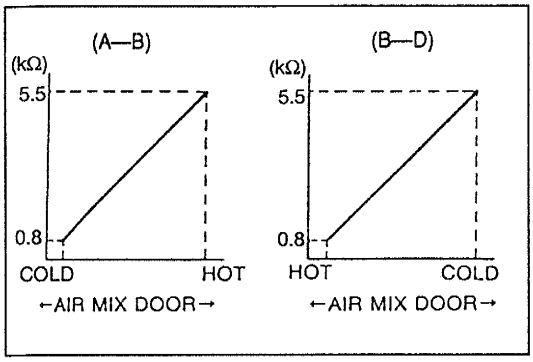

3. Compare the measurement resistance to the characteristics shown in the figure.

Connection		Resistance	Action if not as specified	Action if correct
B+	GND			
G	H	A—B	Replace air mix actuator	Go to Step 3
H	G	B—D		

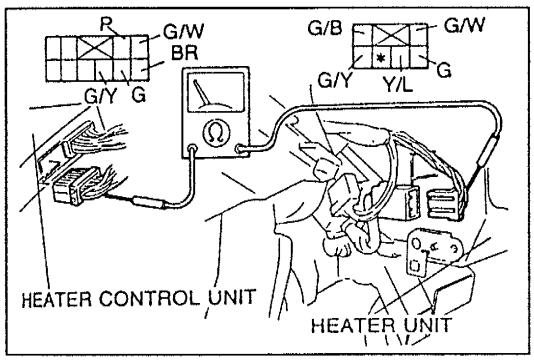

Step 3

1. Disconnect the air mix actuator connector and heater control unit connector.
2. Check for continuity at the following terminal wires between the connectors.

Wire		Action if no continuity	Action if continuity
Heater	Mix		
(BR)	(G/W)	Repair (BR)—(G/W) wire	Check (G)—(G) wire
(G)	(G)	Repair (G)—(G) wire	Check (G/W)—(Y/L) wire
(G/W)	(Y/L)	Repair (G/W)—(Y/L) wire	Check (P)—(G/B) wire
(P)	(G/B)	Repair (P)—(G/B) wire	Check (G/Y)—(G/Y) wire
(G/Y)	(G/Y)	Repair (G/Y)—(G/Y) wire	Replace heater control unit

REFRIGERANT SYSTEM INSPECTION

Possible refrigerant system problems can be located by checking the refrigerant amount and refrigerant pressure.

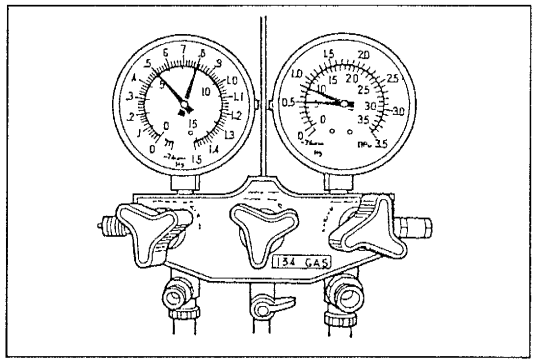

Checking Refrigerant Amount

1. Install the manifold gauge set. (Refer to page G–45.)
2. Check the refrigerant pressure reading with the engine stopped.
3. Verify that the high- and low-pressure-side readings of the manifold gauge are at 493—788 kPa {5.02—8.04 kgf/cm², 72—114 psi}. If the pressure readings are lower than specified, recharge the refrigerant amount. (Refer to page G–45.) If the pressure readings are within specification but there is insufficient cooling, go to the next step. If the pressure readings are within specification and there are no leaks, the refrigerant amount is OK.
4. Start the engine and run it at a constant 2,000 rpm.
5. Turn the A/C switch on, set the fan switch at MAX-HI, and set the air intake mode at REC.
6. If the A/C compressor is short-cycling, note the low-pressure-side reading at which the magnetic clutch kicks out.
7. If the pressure is 170 kPa {1.7 kgf/cm², 24 psi} or lower, evacuate and recharge the refrigerant system with the proper amount of refrigerant. (Refer to page G–45.) If the pressure is 210 kPa {2.1 kgf/cm², 30 psi} or higher, inspect the thermoswitch. (Refer to page G–65.)

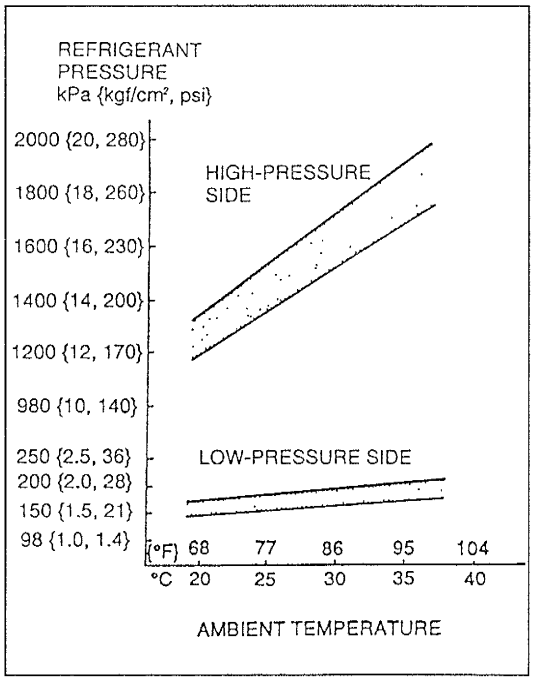

Checking Refrigerant Pressure

1. Close the front windows.
2. Install the manifold gauge set. (Refer to page G–45.)
3. Start the engine and run it at 1,500 rpm.
4. Turn the A/C switch on and set the fan switch to the forth position.
5. Press the REC switch and VENT switch on.
6. Set the temperature control lever to MAX COLD.
7. Verify that the pressure readings of the manifold gauge are in the shaded zones.
8. If the pressures are not as specified, refer to the following table and repair the system. (Refer to page G–35.)
9. If the pressures are normal, inspect the control system.

Pressure condition	Step	Procedure		Cause and Action
High- and low-pressure-side readings are higher than normal	—	Check condenser fins. (Refer to page G–59.) Are they clogged or damaged?	Yes	• Insuffient condenser refrigeration
				Clean or repair condenser fins (Refer to page G–59)
			No	• Too much refrigerant
				Discharge refrigerant and recharge to proper amount (Refer to page G–45)
High- and low-pressure-side readings are lower than normal	1	Check all connections. Are there any oil stains?	Yes	• Insufficient refrigerant because of leakage
				Repair leaks and recharge refrigerant to proper amount (Refer to page G–45)
			No	Go to Step 2
	2	Check for leakage. (Refer to page G–46.) Are there any leaks?	Yes	• Insufficient refrigerant because of leakage
				Repair leaks and recharge refrigerant to proper amount (Refer to page G–45)
			No	• Insufficient charging
				Recharge refrigerant (Refer to page G–45)
High-pressure-side reading is a little lower than normal; low-pressure-side reading is a little higher than normal	—	Check heat-sensing tube. Is it in its proper position and securely connected to evaporator outlet pipe?	Yes	• Expansion valve opening too wide because of expansion valve malfunction
				Replace expansion valve (Refer to page G–63)
			No	• Expansion valve opening too wide because of improper heat-sensing tube installation
				Reinstall heat-sensing tube properly (Refer to page G–64)
High-pressure-side reading rises to normal pressure range and then drops below range; low-pressure-side reading is negative	1	1. Turn A/C compressor off for about 10 minutes. 2. Turn A/C compressor on and immediately check pressure reading. Is pressure reading normal?	Yes	• Expansion valve clogged because of freezing by moisture
				Discharge refrigerant, replace receiver/drier (Refer to page G–60)
			No	Go to Step 2
	2	Check heat-sensing tube. Is it properly installated?	Yes	• Expansion valve clogged with foreign material • Expansion valve opening too wide because of expansion valve malfunction or heat-sensing tube leakage
				Replace expansion valve (Refer to page G–63)
			No	• Expansion valve opening too narrow because of improper heat-sensing tube installation
				Reinstall heat-sensing tube properly (Refer to page G–64)
No difference between high- and low-pressure-side readings	—	—	—	• Improper compression of A/C compressor
				Repair or replace A/C compressor (Refer to page G–49)

HEATER AND REFRIGERANT SYSTEM

HEATER UNIT

Removal / Installation

1. Drain the engine coolant. (Refer to the 1996 626/MX-6 Workshop Manual, section E.)
2. Remove the dashboard. (Refer to the 1996 626/MX-6 Workshop Manual, section S.)
3. Remove the cooling unit. (Refer to page G–62.)
4. Remove as shown in the figure.
5. Install in the reverse order of removal.

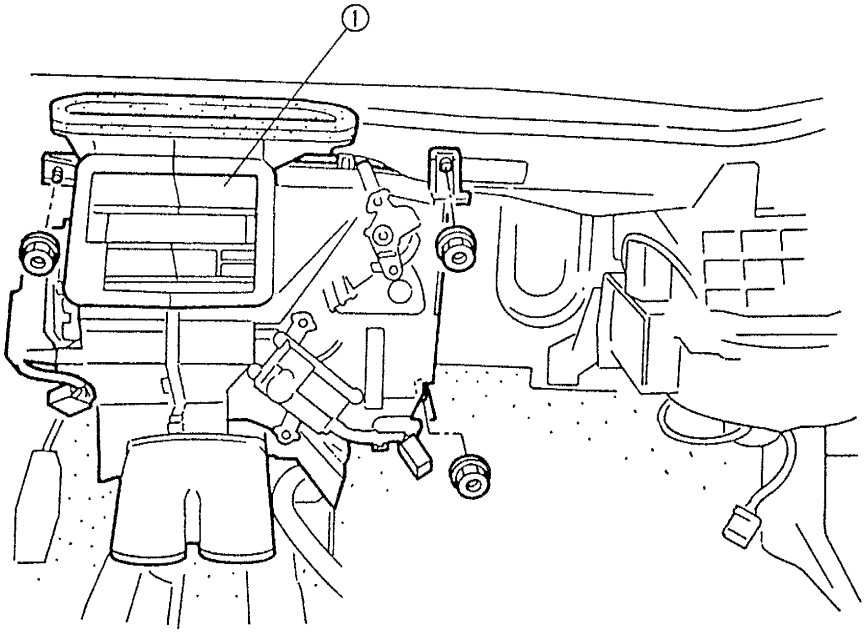

1. Heater unit

Disassembly / Assembly

1. Disassemble in the order shown in the figure.
2. Check for the following and repair or replace the heater core as necessary.
   ① Cranks
   ② Bent fins
   ③ Distorted and bent inlet
3. Assemble in the reverse order of disassembly.

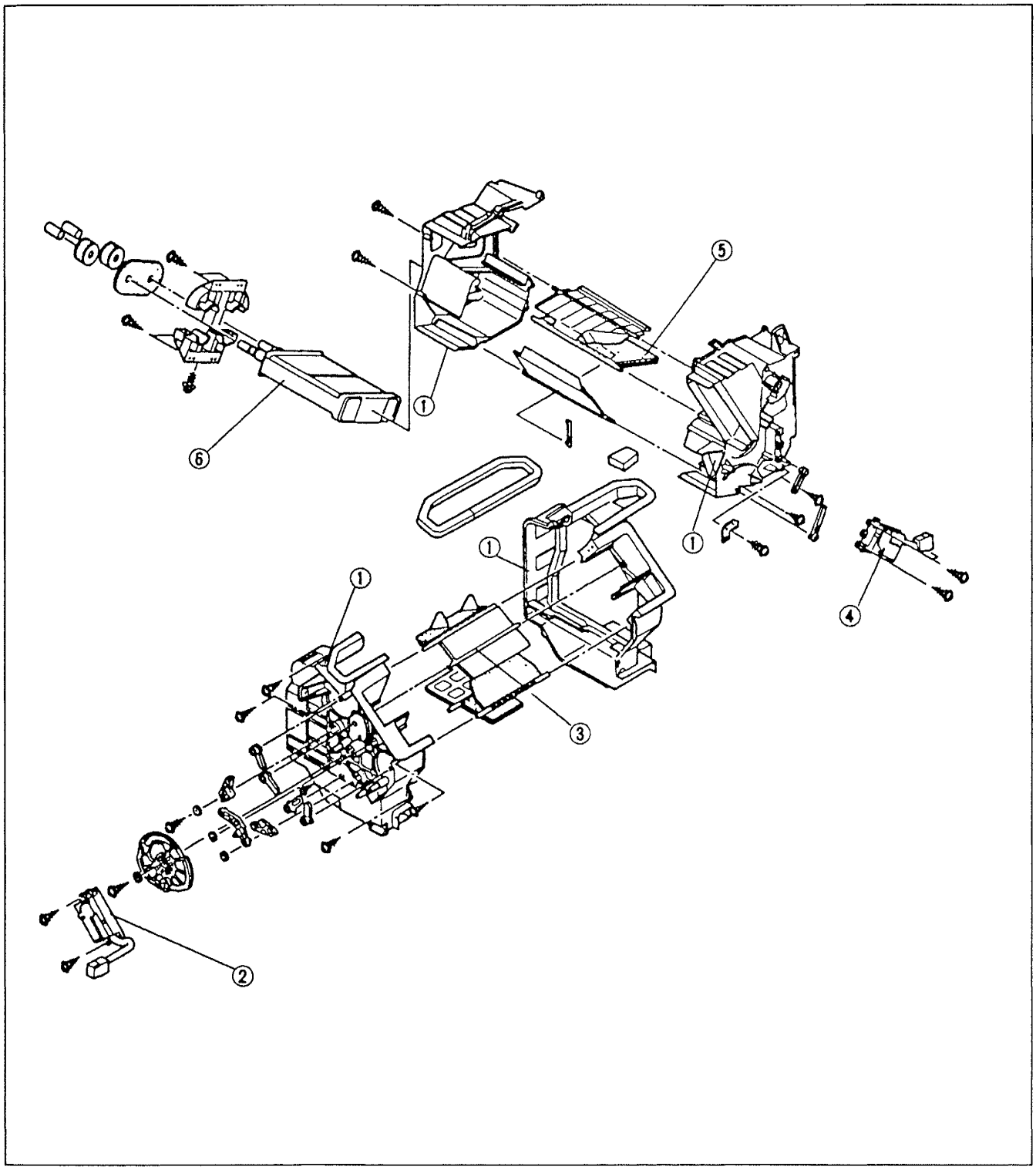

1. Heater unit case
2. Airflow mode actuator
3. Airflow mode door assembly
4. Air mix actuator
5. Mix door assembly
6. Heater core

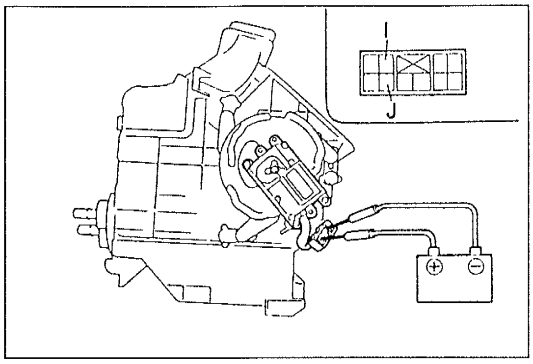

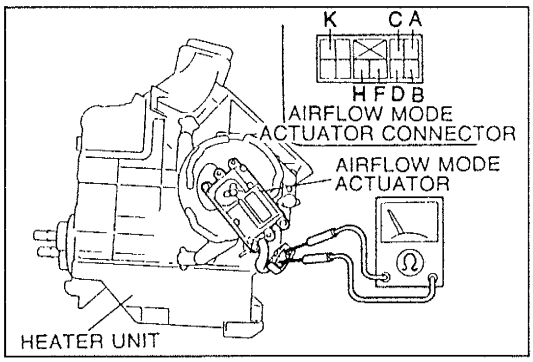

Inspection

Airflow mode actuator

1. Disconnect the airflow mode actuator connector.
2. Connect battery positive voltage to terminals I and J of the airflow mode actuator and check the actuator operation.

B+: Battery positive voltage

Connection		Operation
B+	GND	
J	I	VENT to DEF
I	J	DEF to VENT

3. If not as specified, replace the airflow mode actuator.
4. If correct, check for continuity between the terminals of the actuator for each mode.

○—○ : Continuity

Airflow mode	Terminal						
	A	B	C	D	F	H	K
VENT			○	○	○	○	○
BI-LEVEL	○	○		○	○	○	○
HEAT	○	○	○		○	○	○
HEAT/DEF	○	○	○	○		○	○
DEF	○	○	○	○	○		

5. If not as specified, replace the airflow mode actuator.

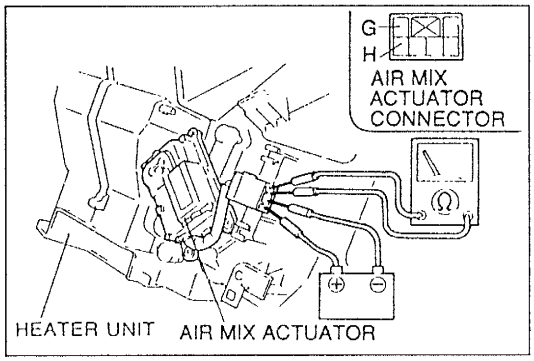

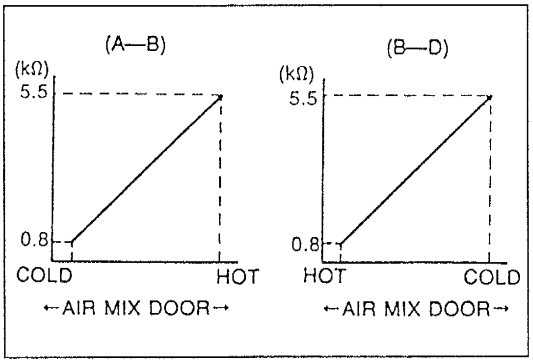

Air mix actuator

1. Disconnect the air mix actuator connector.
2. Connect battery positive voltage to terminals G and H of the air mix actuator and check the actuator operation.

B+: Battery positive voltage

Connection		Operation
B+	GND	
G	H	Hot to Cold
H	G	Cold to Hot

3. If not as specified, replace the air mix actuator.
4. If correct, compare the measurement resistance to the characteristics shown in the figure.

B+: Battery positive voltage

Connection		Operating direction	Resistance
B+	GND		
G	H	Clockwise	A—B
H	G	Counterclockwise	B—D

5. If not as specified, replace the air mix actuator.

BLOWER UNIT
Removal / Installation

1. Remove the dashboard. (Refer to the 1996 626/MX-6 Workshop Manual, section S.)
2. Remove the cooling unit. (Refer to page G–62.)
3. Remove as shown in the figure.
4. Install in the reverse order of removal.

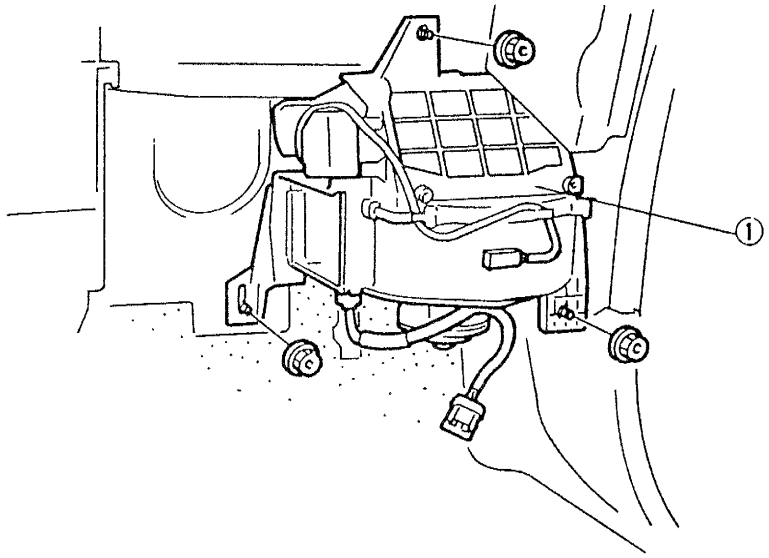

1. Blower unit

Disassembly / Assembly

1. Disassemble in the order shown in the figure.
2. Assemble in the reverse order of disassembly.

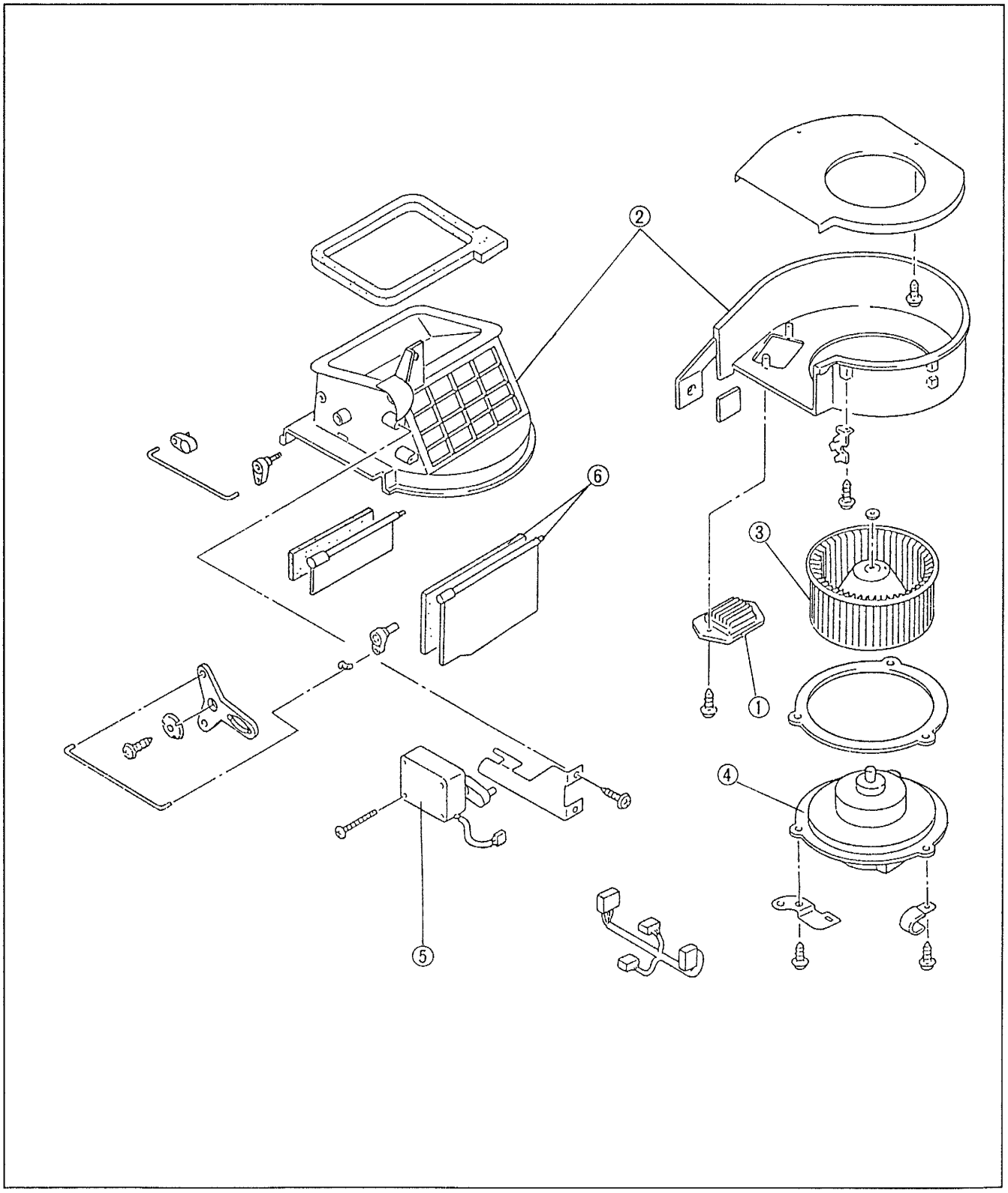

1. Resistor
   Inspection ..... page G–41
2. Blower unit cases
3. Blower fan
4. Blower motor
   Inspection ..... page G–41
5. Air intake actuator
   Inspection ..... page G–41
6. Intake door assembly

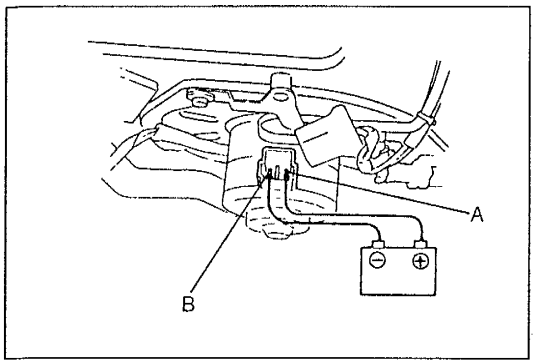

Inspection

Blower motor

1. Remove the glove compartment.
   (Refer to the 1996 626/MX-6 Workshop Manual, section S.)
2. Disconnect the blower motor connector.
3. Connect battery positive voltage to terminal A and ground to terminal B of the blower motor. Verify that the motor operates.
4. If the blower motor does not operate, replace it.

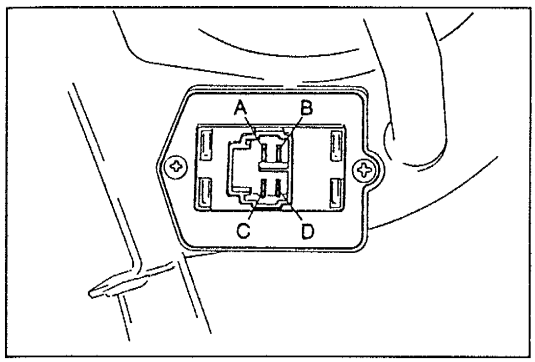

Resistor

1. Remove the glove compartment.
   (Refer to the 1996 626/MX-6 Workshop Manual, section S.)
2. Disconnect the resistor connector.
3. Check for continuity between the resistor terminals.

O—O : Continuity

Terminal			
A	B	C	D
O——	——O		
O——	——	——O	
O——	——	——	——O

4. If not as specified, replace the resistor.

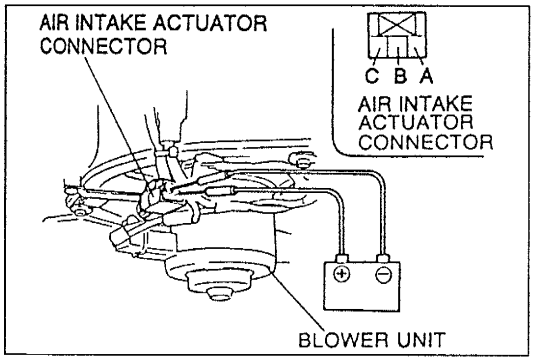

Air intake actuator

1. Disconnect the air intake actuator connector.
2. Connect battery positive voltage to the following terminals of the air intake actuator and check the actuator operation.

B+: Battery positive voltage

Connection		Operation
B+	GND	
A	B	Fresh to Recirculation
A	C	Recirculation to Fresh

3. If not as specified, replace the air intake actuator.

HEATER CONTROL UNIT

Removal / Installation

1. Remove in the order shown in the figure.
2. Install in the reverse order of removal.

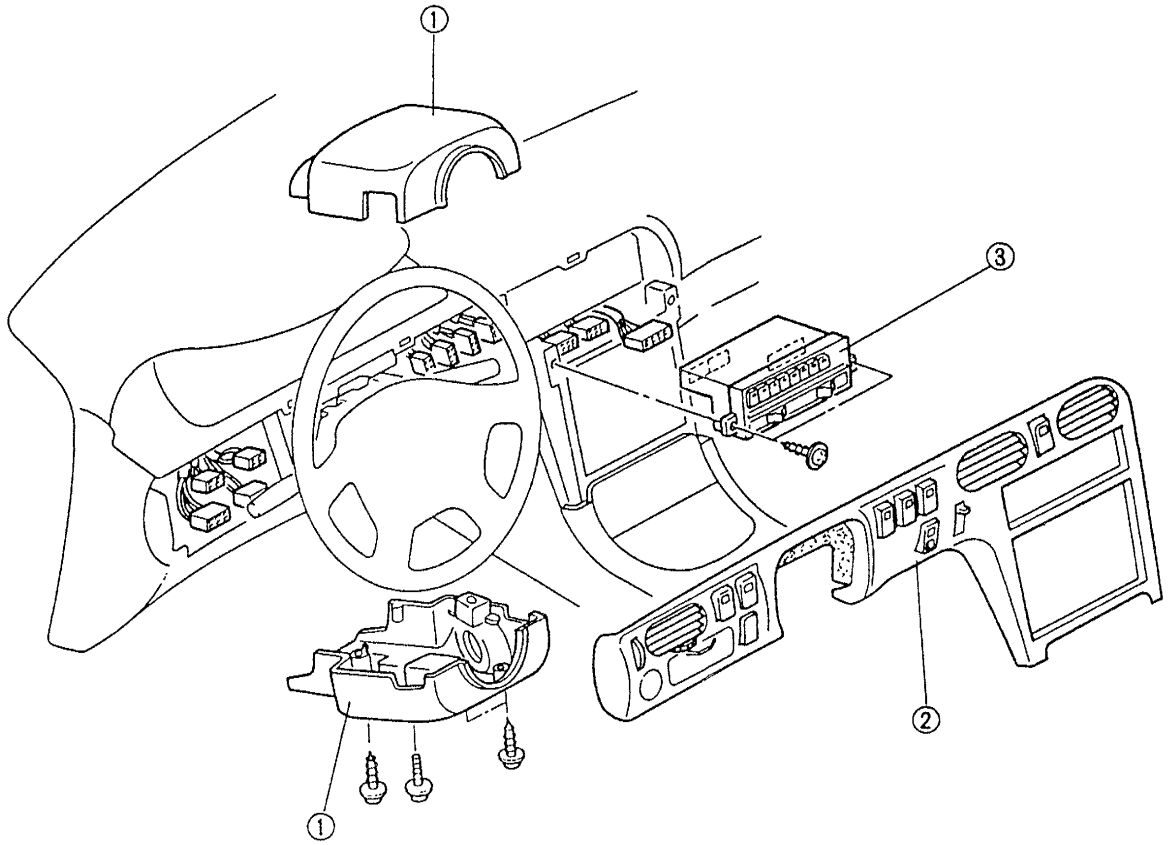

1. Column cover
2. Switch panel
3. Heater control unit

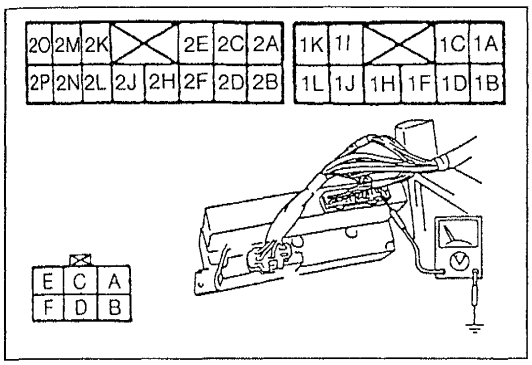

Inspection

1. Remove the switch panel.
   (Refer to the 1996 626/MX-6 Workshop Manual, section S.)
2. Measure the voltage at each terminal of the heater control unit connectors and fan switch connector.
3. If the measurement voltage is incorrect, check the related components and wiring harnesses. If the related components and wiring harness are OK, replace the heater control unit.

Terminal voltage list

B+: Battery positive voltage

Connector	Terminal	Wire	Connection	Test condition	Voltage (V)
Connector A (10 pin)	1A	(G/W)	Air mix actuator	Any	Approx. 6
	1B	(BR)		Any	0
	1C	(P)		Temperature lever moved from hot to cold (Air mix actuator operating at MAX COLD)	B+
	1D	(G)		Temperature lever in hot position	5
				Temperature lever in cold position	Approx. 1
	1F	(G/Y)		Temperature lever moved from cold to hot (Air mix actuator operating at MAX HOT)	B+
	1H	(Y/B)	Airflow mode actuator	VENT switch on (only while airflow mode actuator is operating from DEF to VENT)	B+
	1I	(Y/G)		DEF switch on (only while airflow mode actuator is operating from VENT to DEF)	B+
	1J	(B)	GND	Any	0
	1K	—	—	—	—
	1L	(L)	Ignition switch	Ignition switch at ON	B+
Connector B (14 pin)	2A	(W)	Airflow mode actuator	DEF switch on (only while airflow mode actuator is operating from VENT to DEF)	0
	2B	(G/Y)	Panel light control switch	Light switch on and panel light control switch at maximum illumination	0
				Light switch on and panel light control switch at minimum illumination	Approx. 10
	2C	(W/B)	Airflow mode actuator	VENT switch on (only while airflow mode actuator is operating from DEF to VENT)	B+
	2D	(O)	TNS relay	Light switch on	B+
	2E	(R)	A/C amplifier	Fan switch off	B+
	2F	(L/W)		A/C switch and fan switch on	0
	2H	(G/L)	Air intake actuator	FRESH switch on*	B+
	2J	(L)	—	REC switch on*	B+
	2K	(Y/W)	Airflow mode actuator	DEF switch on	0
	2L	(Y)		HEAT/DEF switch on	0
	2M	(W/L)		HEAT switch on	0
	2N	(W/Y)		VENT switch on	0
	2O	(W/G)		BI-LEVEL switch on	0
	2P	(B/R)	Swing louver	Ignition switch at ON	B+
				Swing switch on	Approx. 1

* It will take a while to get the normal voltage.

Connector	Terminal	Wire	Connection	Test condition	Voltage (V)
Connector C (6 pin)	A	Y/B	Resistor	Fan switch in 3rd position	0
	B	L/W	Resistor, blower motor	Fan switch in 4th position	0
	C	L	Resistor	Fan switch in 2nd position	0
	D	L/B	FS ATX, KL: PCM FS MTX: ECM	Fan switch in 3rd or 4th position	0
	E	L/Y	Resistor, A/C amplifier	Fan switch in 1st position	0
	F	B	GND	Any	0

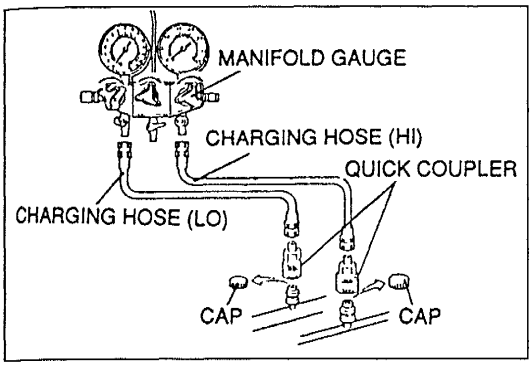

REFRIGERANT SYSTEM SERVICE PROCEDURE

Manifold Gauge Set Installation

1. Fully close the valves of the manifold gauge.
2. Connect charging hoses to the high- and low-pressure side joints of the manifold gauge.
3. Connect quick couplers to the ends of the charging hoses.
4. Remove the caps from the charging valves of the high- and low-pressure side cooler pipes.
5. Connect the quick couplers to the charging valves of the cooler pipes.

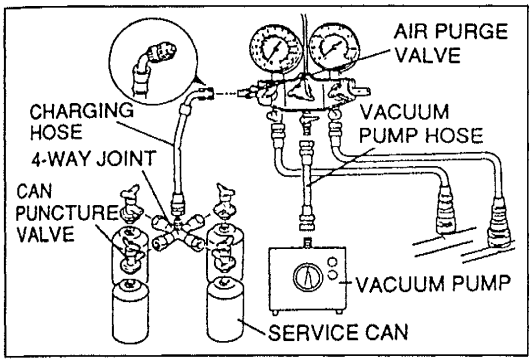

Charging

1. Install the manifold gauge set.
2. Connect the tap pin side of the charging hose to the air purge valve of the manifold gauge.
3. Connect the vacuum pump hose to the center joint of the manifold gauge.
4. Connect the vacuum pump hose to the vacuum pump.
5. Connect the can puncture valves to the 4-way joint.
6. Fully open the can puncture valves and connect the service cans to the valves.

Regular amount of refrigerant: 700 g {24.7 oz}

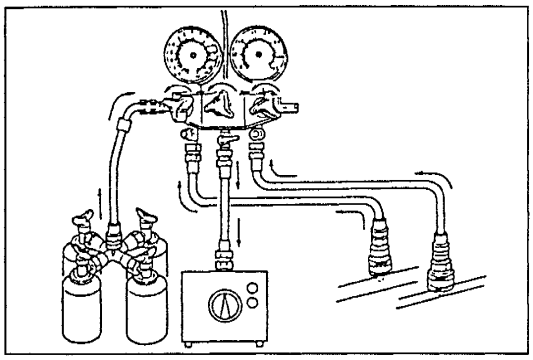

7. Fully close any can puncture valve that is not connected to a service can.
8. Connect the 4-way joint to the charging hose that is connected to the gauge set air purge valve.
9. Open all the valves of the manifold gauge.
10. Start the vacuum pump and let it operate for **15 minutes.**

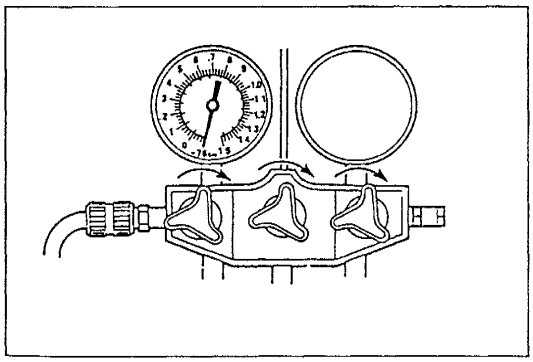

11. After 15 minutes, verify that the high- and low-pressure-side readings of the manifold gauge are at **–101kPa {–760 mmHg, –29.9 inHg}**. Close each valve of the gauge set.
12. Stop the vacuum pump and wait for about **5 minutes.**
13. After 5 minutes, check the low-pressure-side reading of the manifold gauge.
    If the reading has changed, check for leaks and then repeat from Step 9.
    If the reading has not changed, go to Step 14.

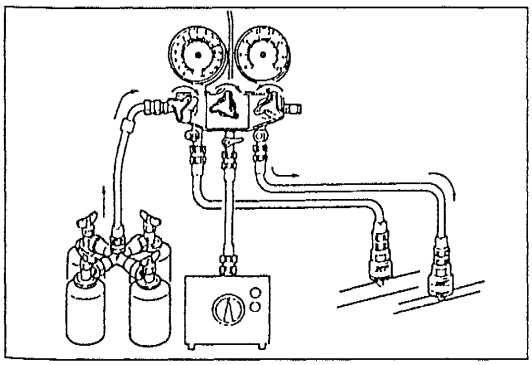

14. Open the service cans by using the can puncture valves.
15. Open the high-pressure side valve of the manifold gauge and charge with refrigerant until the low-pressure-side reading is at **100 kPa {1 kgf/cm², 10 psi}**.
16. Close the high-pressure side valve of the manifold gauge.

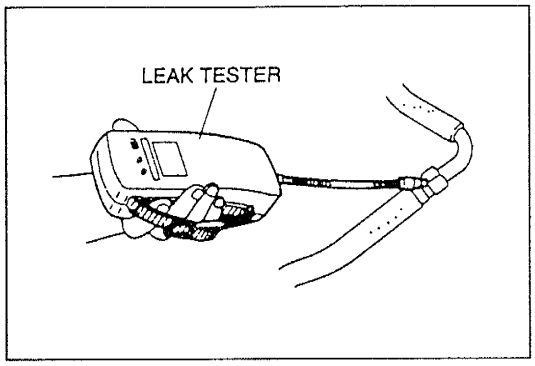

17. Check for leaks by using a leak tester.
    If there are no leaks, go to Step 18.
    If a leak is found at loose joint, tighten the joint and check for leaks again. If there is still a leak at the same joint, discharge the refrigerant and then repair the joint. Repeat the charging procedure from Step 9. If there are no leaks after tightening the joint, go to Step 18.

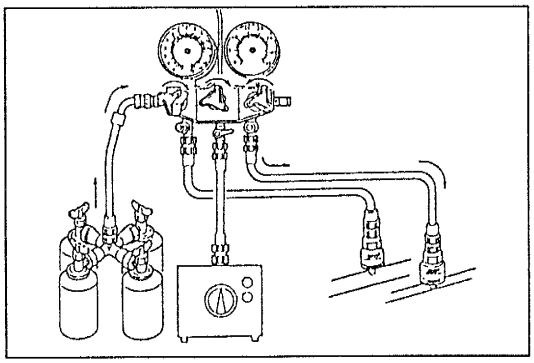

18. Open the high-pressure side valve of the manifold gauge and charge with half the regular amount of refrigerant.

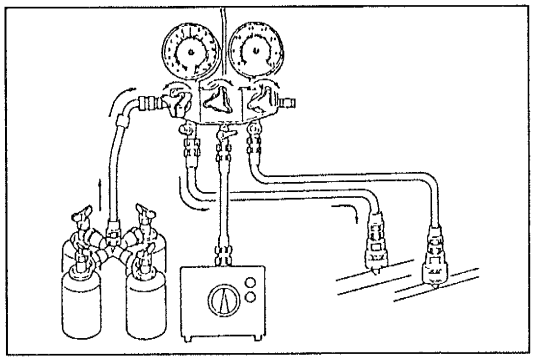

19. Close the high-pressure side valve of the manifold gauge.

    Warning
    - **Running the engine with the high-pressure side valve open is dangerous. Pressure within the service cans will increase and the cans could explode, scattering metal fragments and liquid refrigerant that can seriously injure you. Therefore, do not open the high-pressure side valve while the engine is running.**

20. Start the engine and actuate the A/C compressor.
21. Open the low-pressure side valve of the manifold gauge and charge with the remaining refrigerant.
22. Close the low-pressure side valve of the manifold gauge.
23. Check for leaks by using a leak tester.
    If there are no leaks, go to Step 24.
    If a leak is found at a loose joint, tighten the joint and check for leaks again. If there is still a leak at the same joint, discharge the refrigerant and then repair the joint. Repeat the charging procedure from Step 9. If there are no leaks after tightening the joint, go to Step 24.

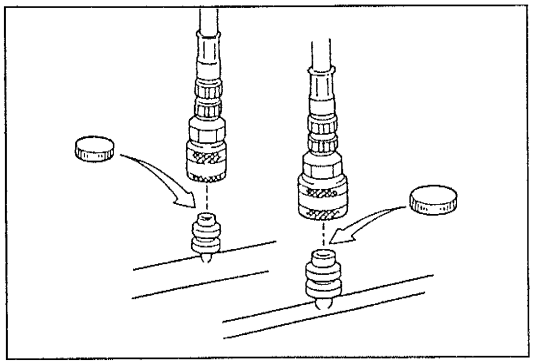

24. Disconnect the high- and low-pressure side quick couplers from the charging valves that are connected to the high- and low-pressure side cooler pipes of the refrigerant system.
25. Install the caps to the charging valves of the cooler pipes.

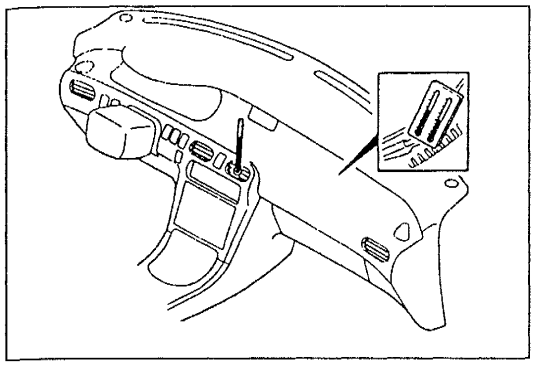

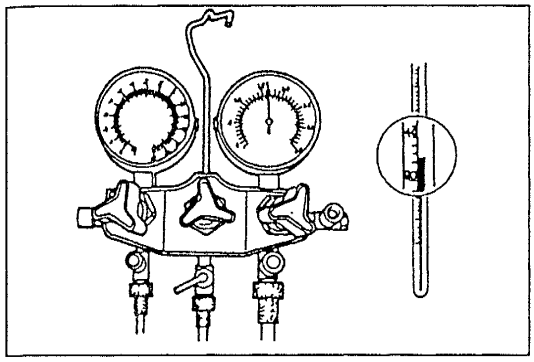

Performance Test

After finishing repairs, conduct a performance test of the refrigerant system as follows:

1. Connect the manifold gauge set. (Refer to page G–45.)
2. Start the engine and run it at 1,500 rpm.
3. Turn the FRESH switch on.
4. Operate the air conditioner at maximum cooling.
5. Close the front windows and the hood.
6. Place a dry-bulb thermometer in the center ventilator outlet.
7. Place a dry-and-wet thermometer close to the blower inlet.
8. Wait until the air conditioner outlet temperature stabilizes. If the high-pressure-side becomes too high, pour cool water on the condenser. If it is too low, cover the front of the condenser.

   Stable condition
   Blower inlet temperature: 25—35 °C {77—95 °F}
   High-pressure side: 1,230—1,610 kPa {12.5—16.5 kgf/cm², 178—234 psi}

9. After the air conditioner stabilizes, read the dry-and-wet thermometer at the air inlet.
10. Calculate the relative humidity from the chart below by comparing the wet-and-dry-bulb readings.

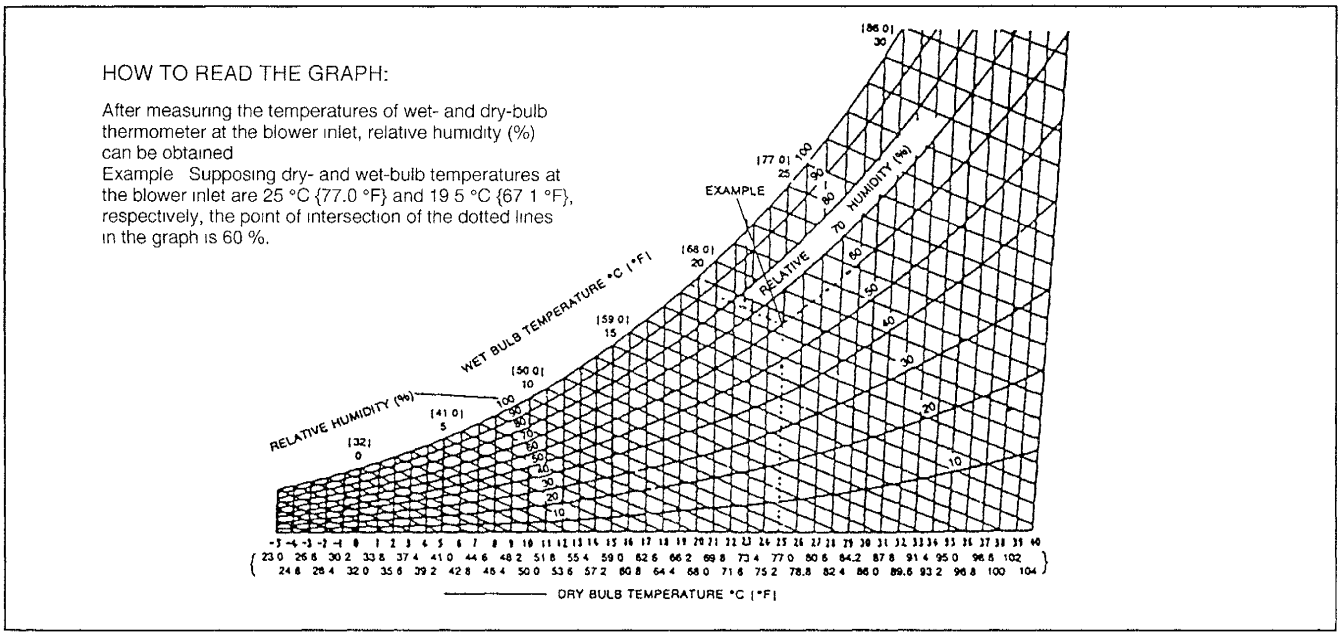

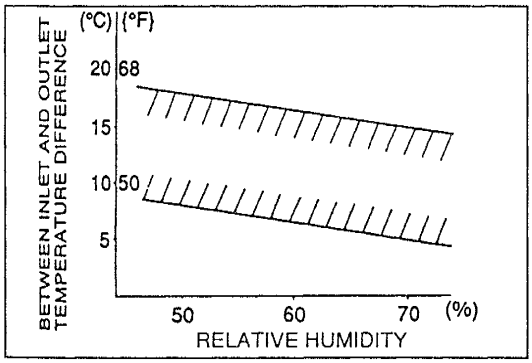

11. Read the dry thermometer at the air outlet, and calculate the difference between the inlet dry-bulb and the outlet dry-bulb temperatures.
12. Verify that the intersection of the relative humidity and temperature difference is in the shaded zone.

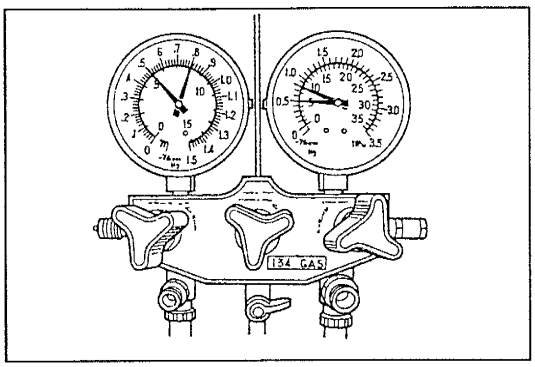

Checking Refrigerant Amount

1. Install the manifold gauge set. (Refer to page G–45.)
2. Check the refrigerant pressure reading with the engine stopped.
3. Verify that the high-and low-pressure-side readings of the manifold gauge are at 493—788 kPa {5.02—8.04 kgf/cm², 72—114 psi}.

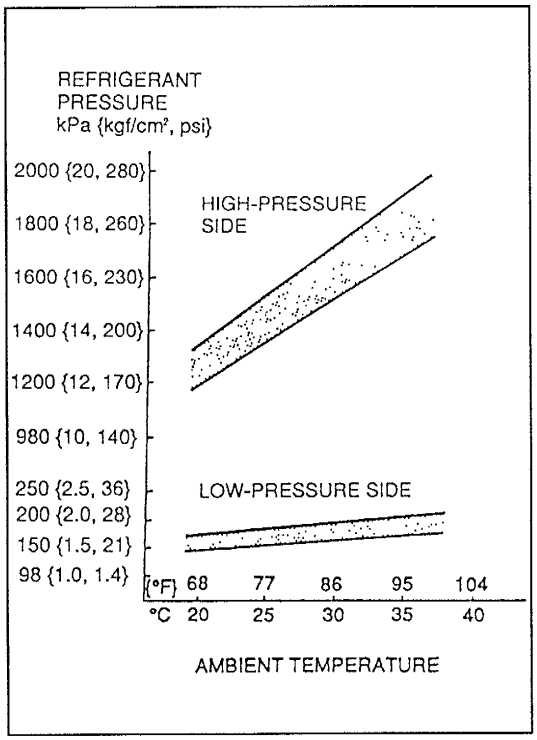

Checking Refrigerant Pressure

1. Close the front windows.
2. Install the manifold gauge set. (Refer to page G–45.)
3. Start the engine and run it at 1,500 rpm.
4. Turn the A/C switch on and set the fan switch to the fourth position.
5. Turn the REC switch and VENT switch on.
6. Set the temperature control lever to MAX COLD.
7. Verify that the pressure readings of the manifold gauge are in the shaded zones.

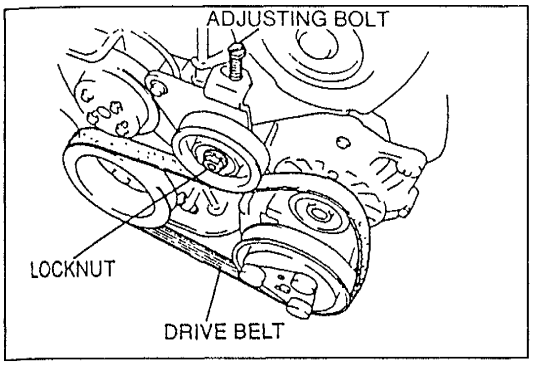

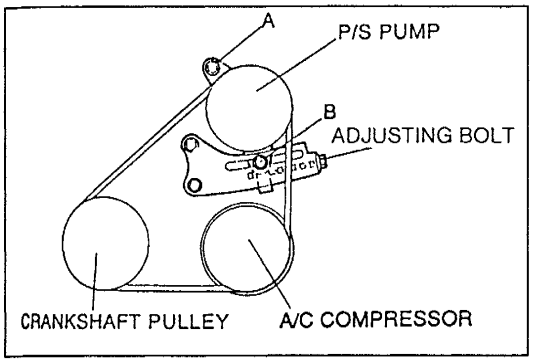

A/C COMPRESSOR

Removal / Installation

1. Discharge the refrigerant from the system.
2. Remove the drive belt as follows:

KL engine

1) Loosen the idler pulley locknut.
2) Loosen the adjusting bolt and remove the drive belt.

FS engine

1) Loosen bolt A.
2) Loosen bolt B.
3) Loosen the adjusting bolt and remove the drive belt.

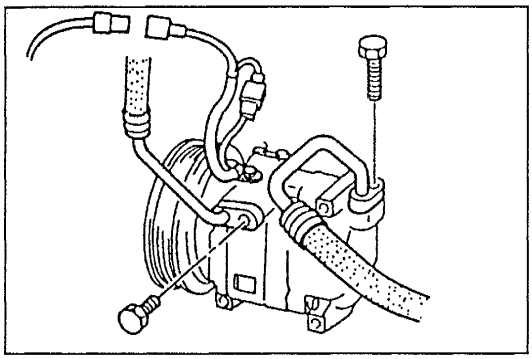

3. Remove the lower cover.
4. Disconnect the magnetic clutch connector.
5. Disconnect the flexible hose from the A/C compressor.

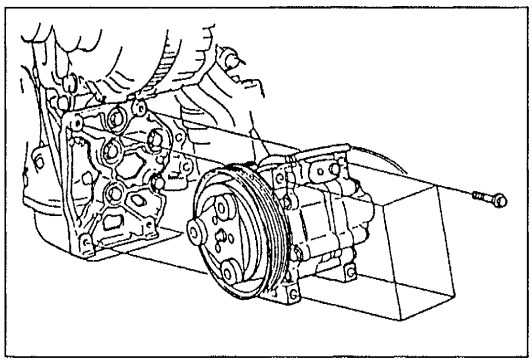

6. Remove the bolts and remove the A/C compressor.

Warning

- **Continuous contact with used oils may irritate the skin and can cause serious effects, including skin cancer. Protect your skin by washing with soap and water immediately after this work.**

7. Install in the reverse order of removal. When replacing the A/C compressor, remove the following amount of oil from the new A/C compressor.

Compressor oil to be removed
=175 ml {175 cc, 5.92 fl oz}–(oil from old A/C compressor +15—20 ml {15—20 cc, 0.5—0.6 fl oz})

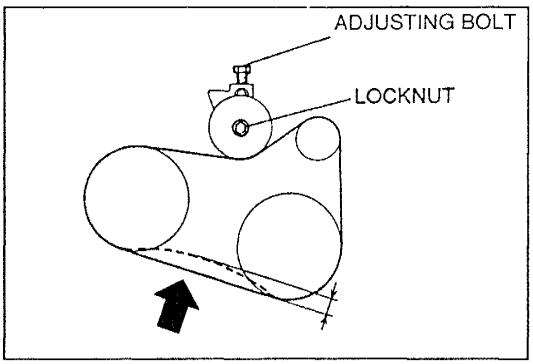

Adjustment
Drive belt

KL engine
1) Loosen the locknut.
2) Adjust the drive belt deflection to specification by turning the adjusting bolt.

Drive belt	Deflection when applying moderate pressure 98 N {10 kgf, 22 lbf}
New	5.5—6.5 mm {0.22—0.25 in}
Used	6.5—7.5 mm {0.26—0.29 in}

3) Tighten the locknut.

Tightening torque
Locknut: 32–46 N·m {3.2–4.7 kgf·m, 24–33 ft·lbf}

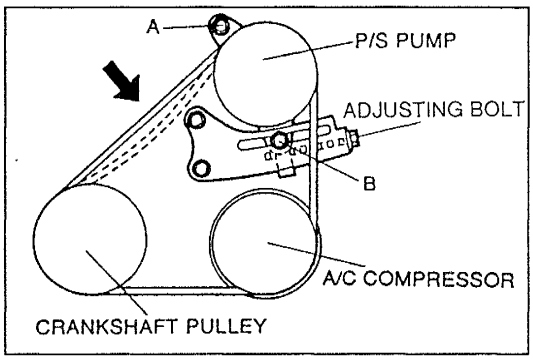

FS engine
1) Loosen bolts A and B.
2) Adjust the drive belt deflection to specification by turning the adjusting bolt.

Drive belt	Deflection when applying moderate pressure 98 N {10 kgf, 22 lbf}
New	7.5—9.0 mm {0.30—0.35 in}
Used	8.0—9.5 mm {0.32—0.37 in}

3) Tighten bolts A and B and recheck the deflection.

Tightening torque
Bolt A: 44—60 N·m {4.4—6.2 kgf·m, 32—44 ft·lbf}
Bolt B: 32—46 N·m {3.2—4.7 kgf·m, 24—33 ft·lbf}

Compressor Noise Troubleshooting

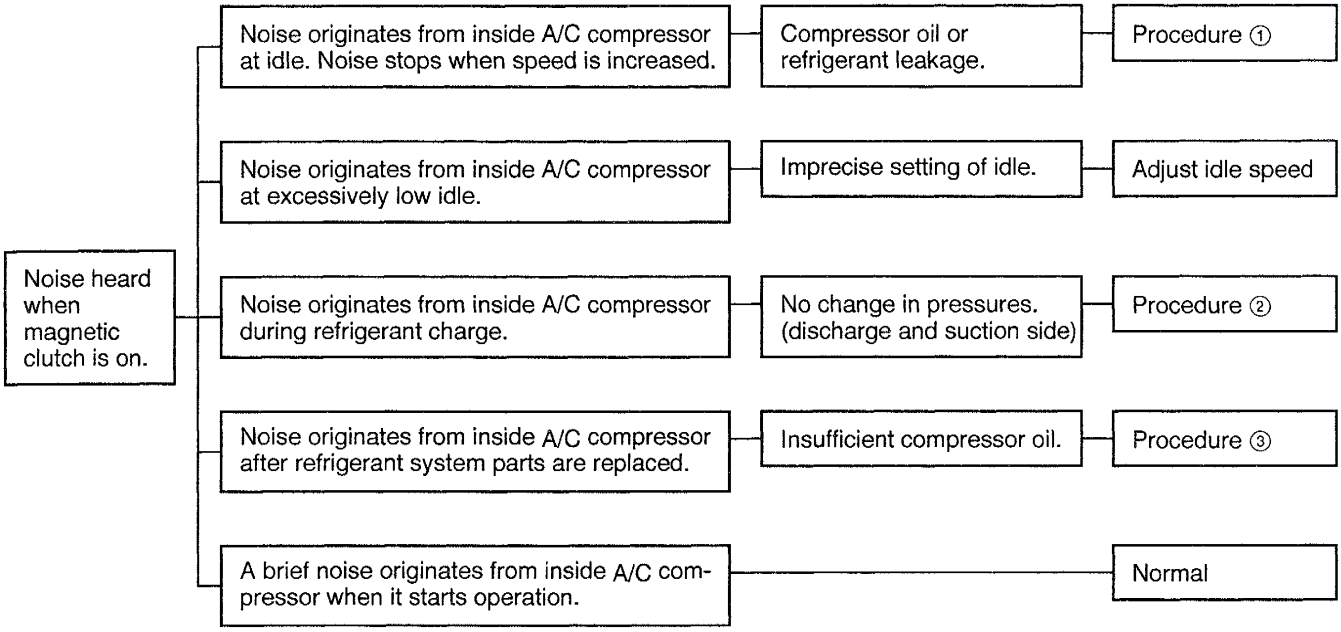

Procedure ①

Check the entire refrigerant system for compressor oil and refrigerant leaks. If leakage is found, repair or replace as necessary.

Procedure ②

Run the engine at a constant 3,000—4,000 rpm; then alternately switch the A/C compressor on and off (turn the A/C switch on and off). If the noise remains, turn the ignition switch to LOCK for 1–2 minutes. Start the engine again, hold its speed at 3,000—4,000 rpm, and alternately switch the A/C compressor on and off (turn the A/C switch on and off).

Procedure ③

After replacing parts, add compressor oil as shown in the following table.

Replace part	Oil supplement
Condenser	15 ml {15 cc, 0.5 fl oz}
Cooling unit	50 ml {50 cc, 1.7 fl oz}
Piping hose/pipe	6 ml {6 cc, 0.2 fl oz}
Receiver/drier	10 ml {10 cc, 0.3 fl oz}

Disassembly / Assembly
Preparation
SST

49 B061 005 Replacer, seal plate	For replacement of shaft seal plate	0000-41-0809-06 Remover and installer, seal	For replacement of shaft seal plate

1. Disassemble in the order shown in the figure, referring to **Disassembly note.**
2. Assemble in the reverse order of disassembly, referring to **Assembly note.**

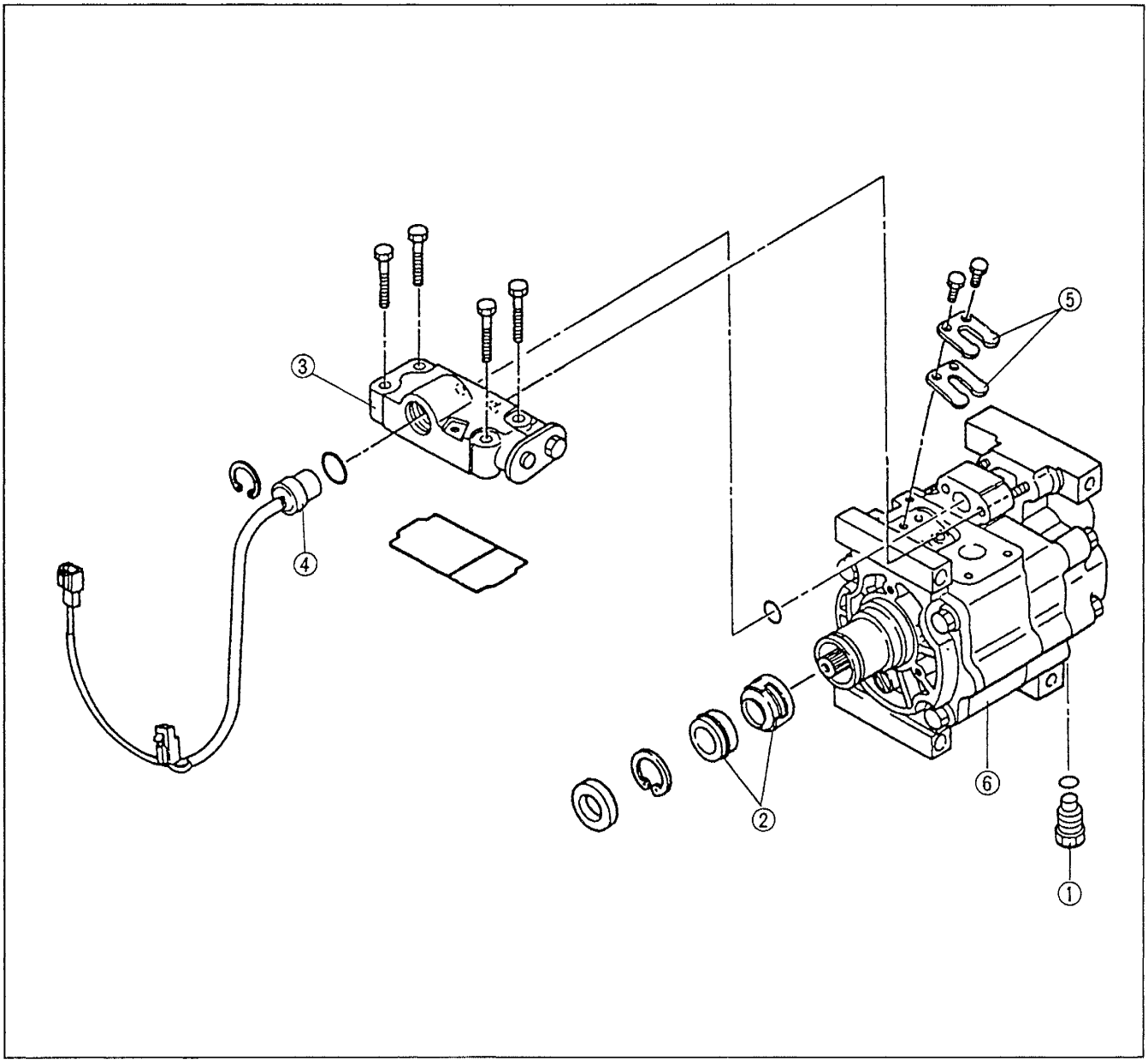

1. Pressure relief valve
2. Shaft seal and seal plate
   Disassembly note..... page G–53
   Assembly note..... page G–56
3. Head cover
   Assembly note..... page G–55
4. Thermal protector
   Disassembly note..... page G–54
   Assembly note..... page G–54
5. Discharge valve and valve stopper
   Assembly note..... page G–54
6. A/C compressor body

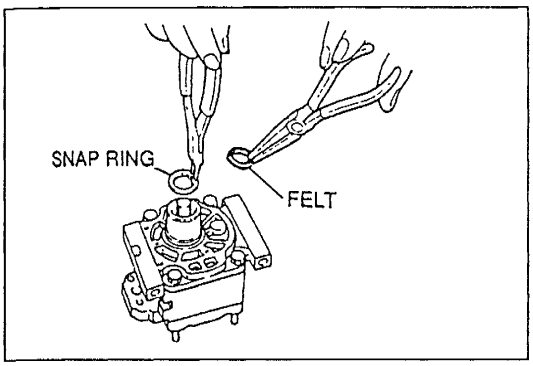

Disassembly note
Shaft seal and seal plate

1. Remove the armature plate.
2. Remove the felt seal and snap ring.

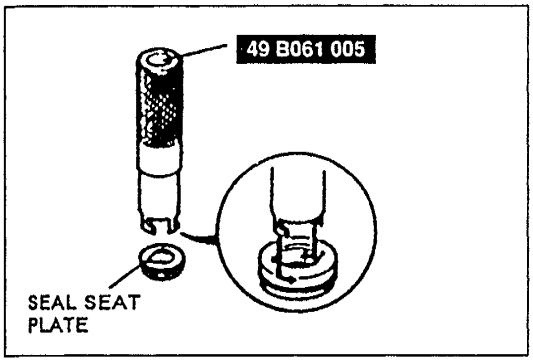

3. Remove the shim(s).
4. Align the cutout of the **SST** with the groove of the shaft seal plate and insert the **SST** into the compressor.
5. Rotate the **SST** counterclockwise to make sure that the cutout is engaged with the plate.

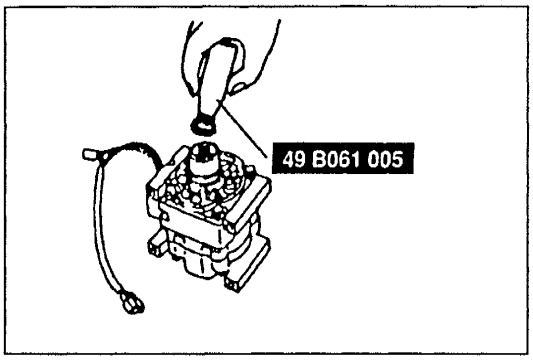

6. Pull out the shaft seal plate.

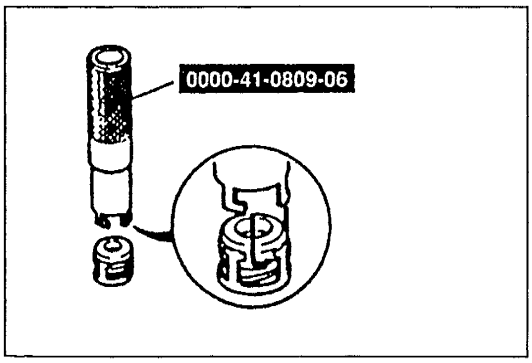

7. Align the cutout of the **SST** with the metal pawl of the shaft seal and insert the **SST** into the compressor.
8. Rotate the **SST** counterclockwise to make sure that the cutout is engaged with the metal pawl.

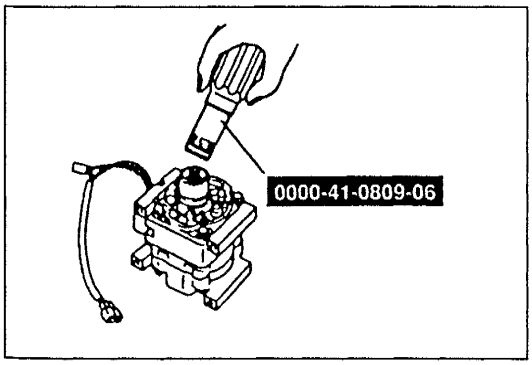

9. Pull out the shaft seal.

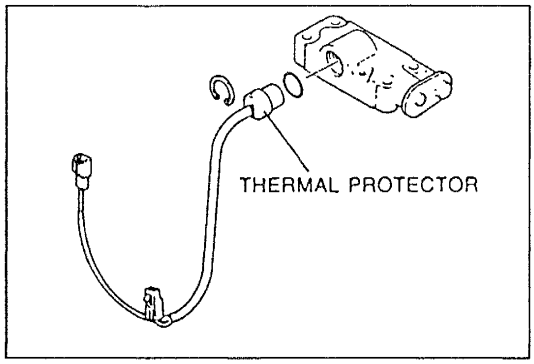

Thermal protector

Remove the snap ring and push the protector out from its back side to remove it. Do not pull on the wiring harness.

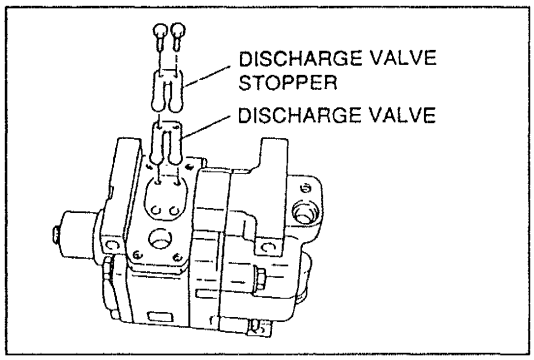

Assembly note

Discharge valve and valve stopper

1. Replace the O-ring and gasket .
2. Make sure the compressor body and surfaces of the discharge valve and valve stopper are free from foreign material before installing then.

   Tightening torque: 4.9 N·m {50 kgf·cm, 43 in·lbf}

3. Plug the suction and discharge ports with the caps.

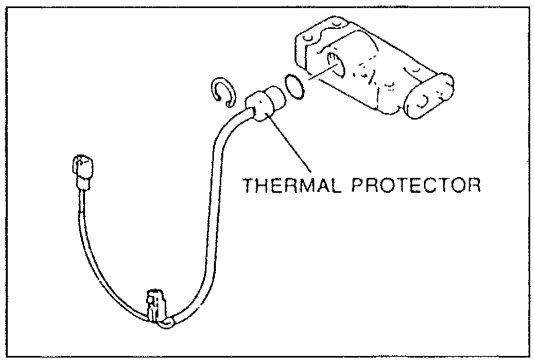

Thermal protector

1. Make sure the O-ring is free from foreign material. Apply compressor oil to the O-ring and fit it into the groove securely.
2. Check for continuity between the protector terminals.
3. Install the snap ring so that its chamfered edge faces the thermal protector. Make sure the snap ring is seated securely in its groove.

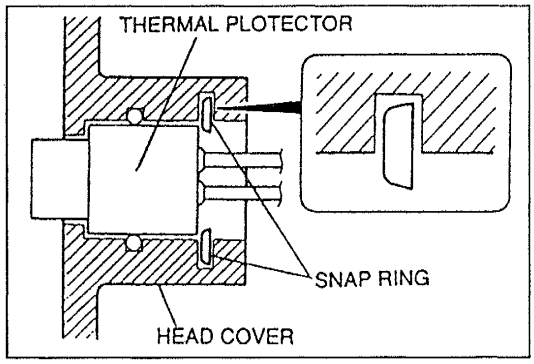

4. Install the thermal protector so that its two lead wire outlet sections are horizontal, as shown in the figure.

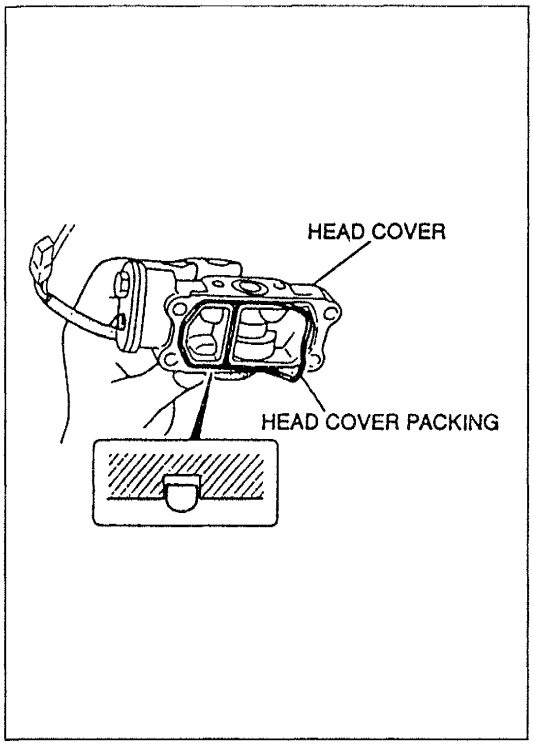

Head cover

1. Replace the O-ring and gasket with new ones. Apply compressor oil to the new O-ring and gasket and assemble them. Make sure the top side of the gasket faces upward.

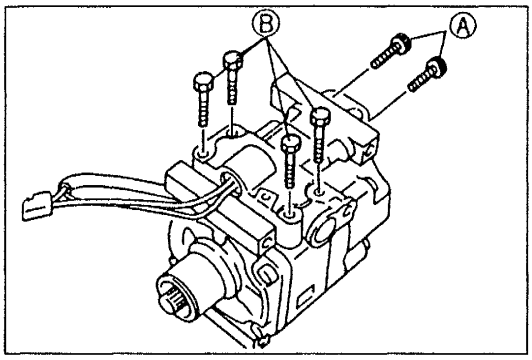

2. Carefully install the head cover on the compressor body. Tighten socket head bolts A, and then tighten bolts B in a diagonal manner.

Tightening torque
A: 12.7 N·m {130 kgf·cm, 113 in·lbf}
B: 9.81 N·m {100 kgf·cm, 86.8 in·lbf}

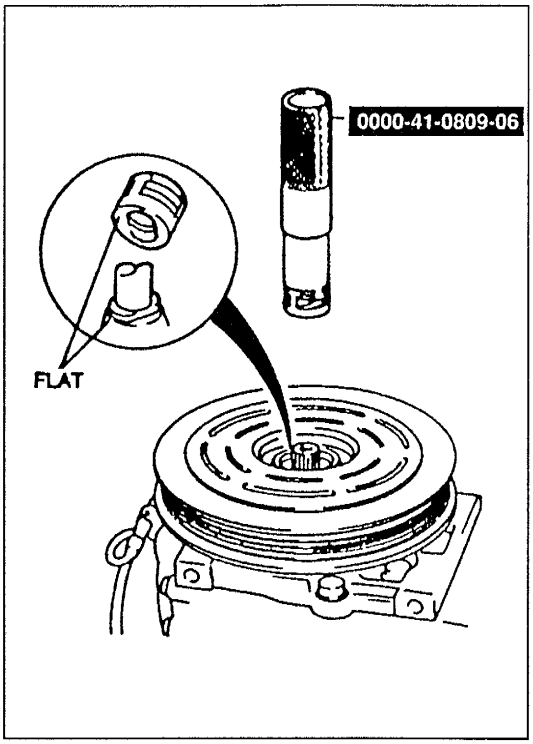

Shaft seal and seal plate

1. Clean the shaft seal contacting face of the compressor with cleaning solvent. Do not use a cloth. Keep dirt and solvent out of the compressor. If refrigerant oil spills from the compressor, refill with the same amount of oil.
2. Clean the new shaft seal thoroughly with cleaning solvent .
3. Lubricate the shaft seal with clean compressor oil (ATMOS GU10) and install it on the **SST**. Do not touch the sealing surfaces of the shaft seal after lubrication.
4. Liberally lubricate the compressor shaft with refrigerant oil.
5. Align the seal case flats with the shaft flats and install the shaft seal onto the compressor shaft.

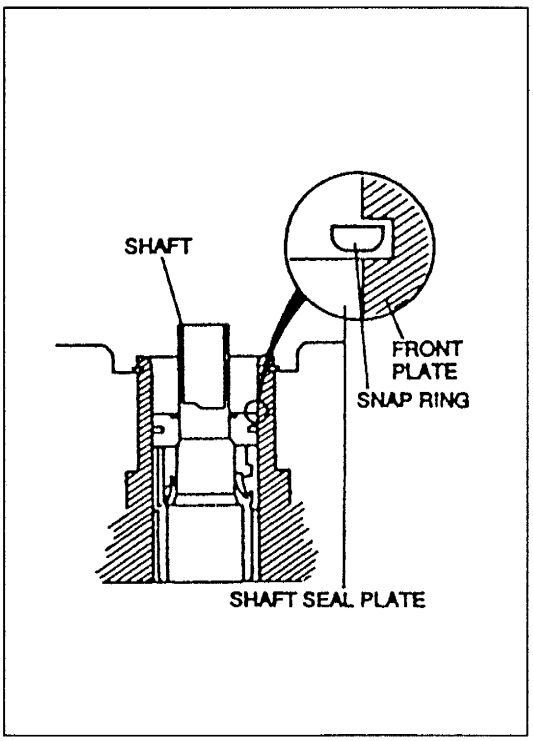

6. Clean the shaft seal plate with cleaning solvent.
7. Lubricate the seal plate with clean compressor oil (ATMOS GU10). Do not touch the sealing surface of the plate after lubrication.
8. Slide the seal plate into the compressor by hand as far as possible.
9. Press the seal plate with the grip side of the **SST** (49 B061 005).
10. Install the snap ring with its chamfered edge inside.
11. Press the snap ring with the grip side of the **SST** (49 B061 005), and then install the felt seal. Make sure the snap ring is seated correctly in its groove.
12. Install the shim(s).
13. Install the armature plate.
14. Measure the clearance between the pulley and the armature plate all the way around. If the clearance is not as specified, add or remove the shim(s) as required. (Refer to page G–57.)

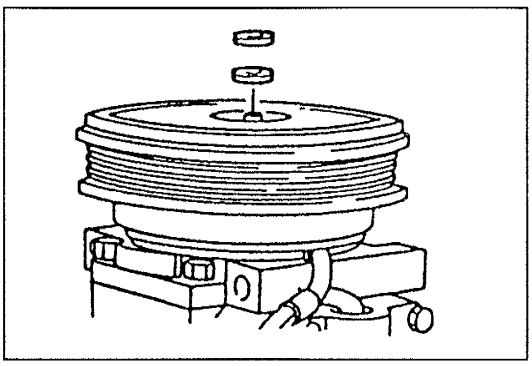

Clearance: 0.4—0.6 mm {0.016—0.023 in}

Shim

Part number	Thickness mm {in}
B455 61 L15	0.2 {0.008}
B456 61 L15	0.5 {0.020}

MAGNETIC CLUTCH

Disassembly / Assembly

1. Disassemble in the order shown in the figure.
2. Assemble in the reverse order of disassembly, referring to **Assembly note.**

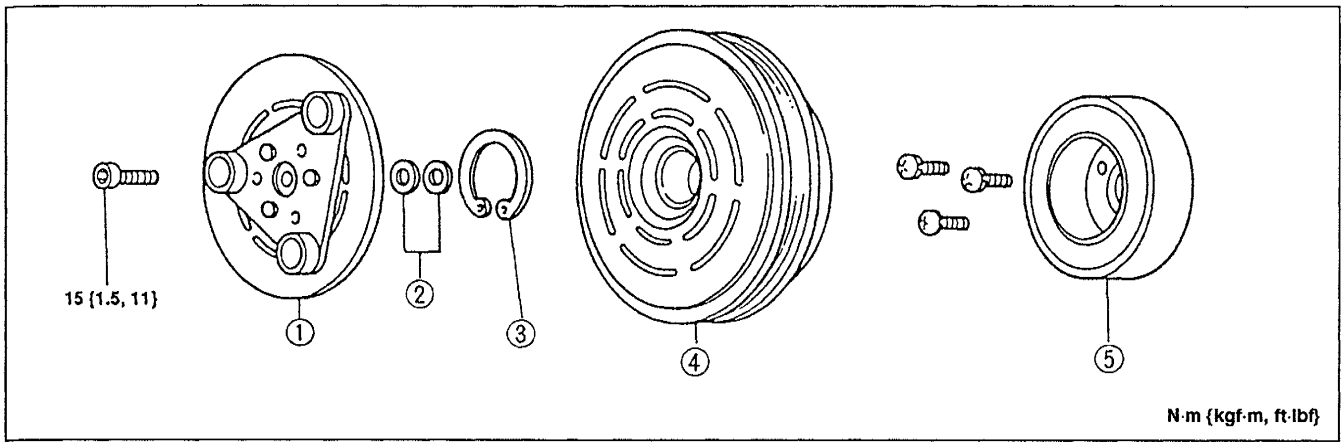

1. Pressure plate
   Assembly note ..... below
2. Shim
3. Snap ring
4. Rotor pulley
5. Stator
   Inspection ..... below

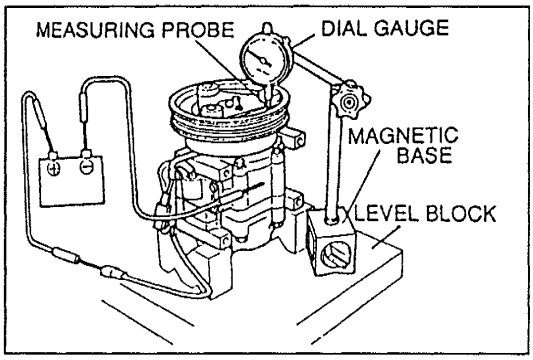

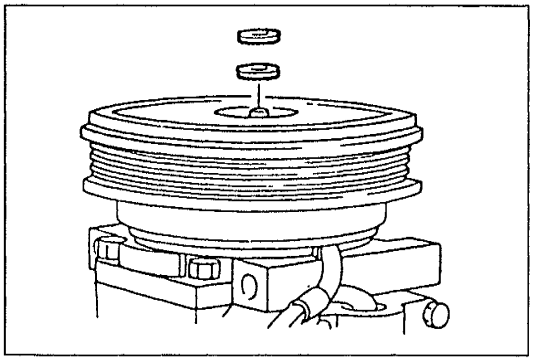

Assembly note

Pressure plate

1. Measure the clearance between the pressure plate and the rotor pulley.
   (1) Set the A/C compressor on a level block.
   (2) Fix a dial gauge on a magnetic base and set the measuring probe on the pressure plate surface.
   (3) Alternately apply and remove battery positive voltage as shown in the figure. The clearance is the difference in the dial gauge readings.
   (4) Compare the measure clearance with the specified clearance below.

Clearance: 0.4—0.6 mm {0.016—0.023 in}

2. If not as specified, install shims to adjust the clearance.

Part number	Thickness mm {in}
B455 61 L15	0.2 {0.008}
B456 61 L15	0.5 {0.020}

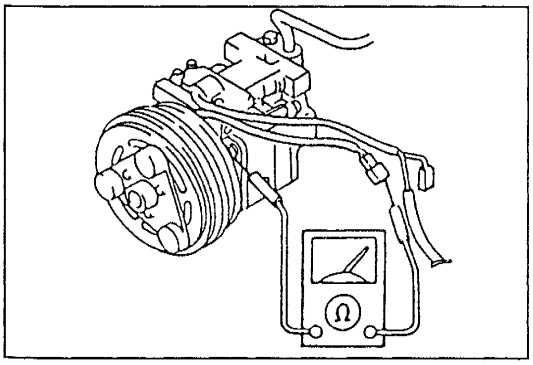

Inspection

Stator

1. Set the ohmmeter to the x1,000Ω range.
2. Verify that there is continuity between the stator terminal and the A/C compressor body.
3. If there is no continuity, replace the stator.

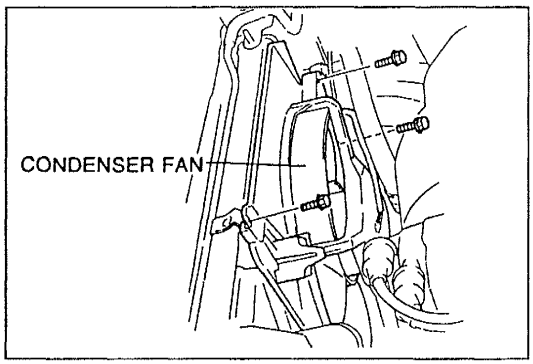

CONDENSER FAN

Removal / Installation

1. Remove the fresh-air duct.
2. Disconnect the condenser fan connector.
3. Remove the condenser fan as shown in the figure.
4. Install in the reverse order of removal.

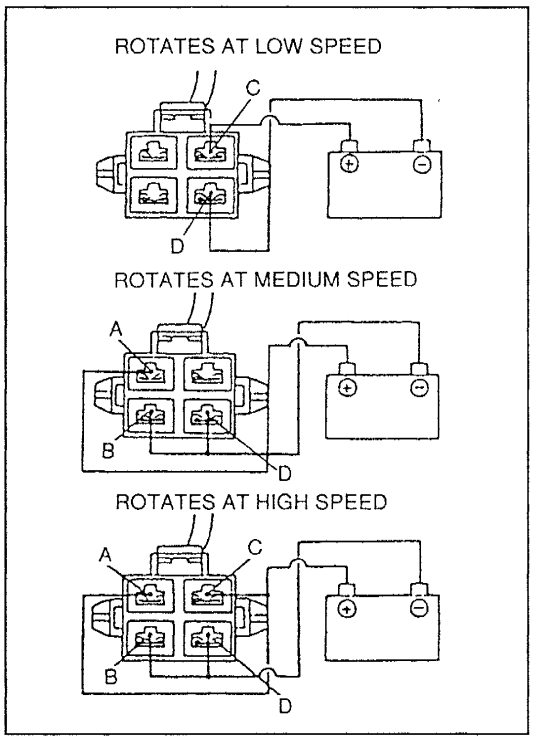

Inspection

KL engine

1. Disconnect the condenser fan connector.
2. Connect battery positive voltage and check the condenser fan operation.

B+: Battery positive voltage

Connection		Condenser fan
B+	GND	
C	D	Operates at low speed
A	B and D	Operates at medium speed
A and C	B and D	Operates at high speed

3. If not as specified, replace the condenser fan.

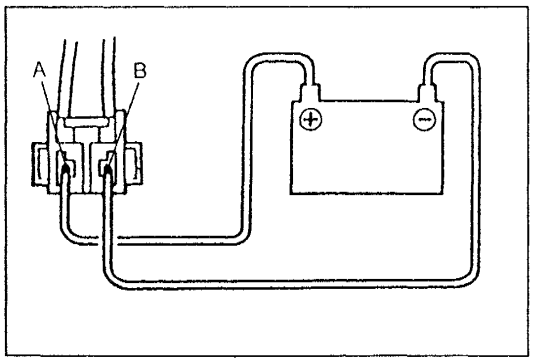

FS engine

1. Disconnect the condenser fan connector.
2. Connect battery positive voltage to the condenser fan as shown and verify that the condenser fan operates.
3. If the condenser fan does not operate or the operating speed is too low, replace the condenser fan.

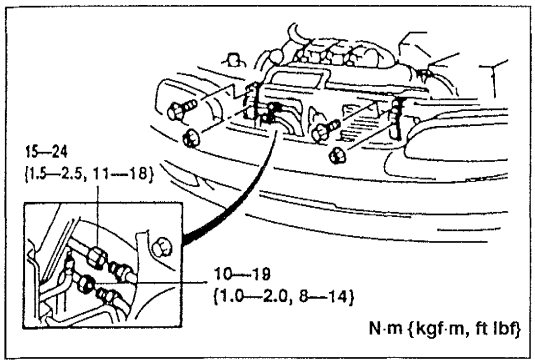

CONDENSER

Removal / Installation

1. Discharge the refrigerant from the system.
2. Remove the fresh-air duct.
3. Remove the radiator brackets.
   (Refer to the 1996 626/MX-6 Workshop Manual, section E.)
4. Disconnect the pipes from the condenser.

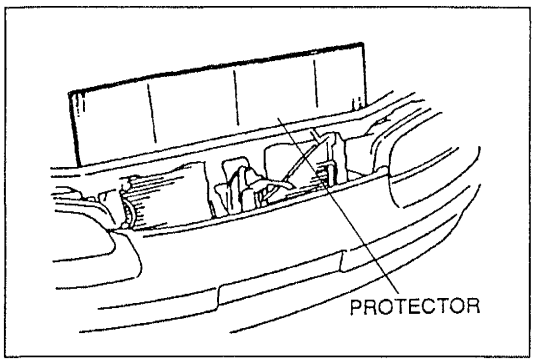

5. Insert a protector (such as cardboard) between the condenser and the radiator.

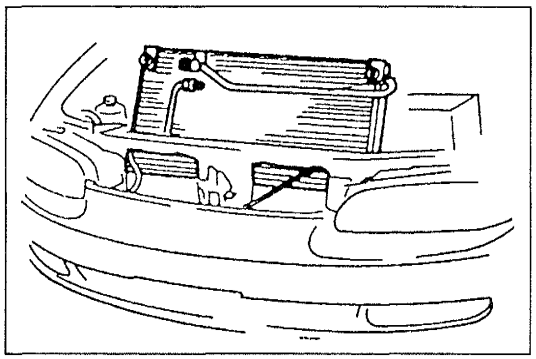

6. Remove the condenser as shown in the figure.
7. Install in the reverse order of removal. Apply clean compressor oil to the O-rings before connecting the fittings; do not apply compressor oil to the fitting nuts. When installing a new condenser, add 15 ml {15 cc, 0.5 fl oz} of compressor oil through the high-pressure side of the condenser.

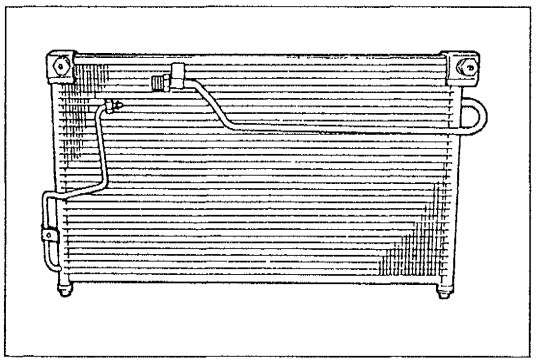

Inspection

Check for the following and repair or replace the condenser as necessary.

1. Cracks
2. Bent fins
3. Distorted or damaged condenser inlet or outlet

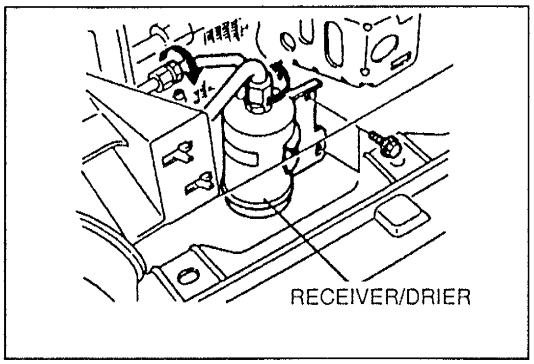

RECEIVER/DRIER

Removal / Installation

1. Discharge the refrigerant from the system.
2. Disconnect the pipes from the receiver/drier.
3. Remove the receiver/drier.
4. Install in the reverse order of removal. Apply clean compressor oil to the O-rings before connecting the fittings. When installing a new receiver/drier, add 10 ml {10 cc, 0.3 fl oz} of compressor oil through the high-pressure side of the A/C compressor.

Tightening torque:
7.9—11.7 N·m {80—120 kgf·cm, 70—104 in·lbf}

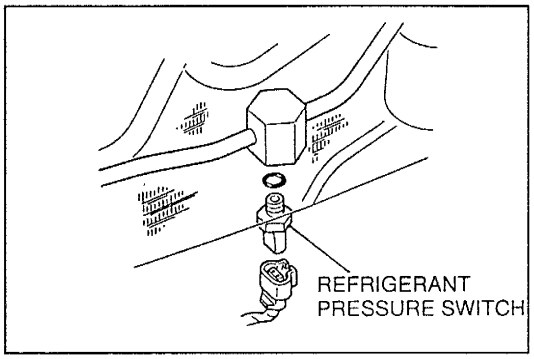

REFRIGERANT PRESSURE SWITCH

Removal / Installation

1. Discharge the refrigerant from the system.
2. Disconnect the refrigerant pressure switch connector and remove the refrigerant pressure switch.
3. Install in the reverse order of removal. Replace the O-ring.

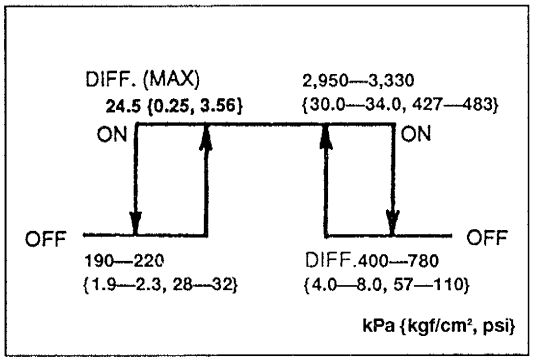

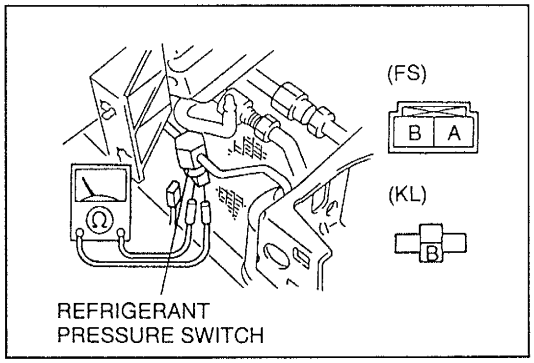

Inspection

If problems occur in the refrigerant system that cause abnormally high pressure (above 2,950—3,330 kPa {30.0—34.0 kgf/cm² 427—483 psi}) or abnormally low pressure (below 190—220 kPa {1.9—2.3 kgf/cm², 28—32 psi}), the refrigerant pressure switch will cut power to the magnetic clutch to protect the mechanical components. If the pressure recovers to within normal operating range, the power will be restored.

1. Connect a manifold gauge set to the charging valve; verify that the high-pressure side reads 260—2150 kPa {2.6—22.0 kgf/cm², 37—312 psi}.
2. Disconnect the refrigerant pressure switch connector and verify that there is continuity between the switch terminals.
3. If there is not continuity, replace the refrigerant pressure switch.

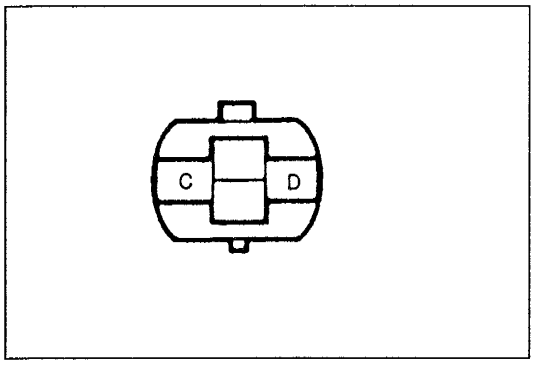

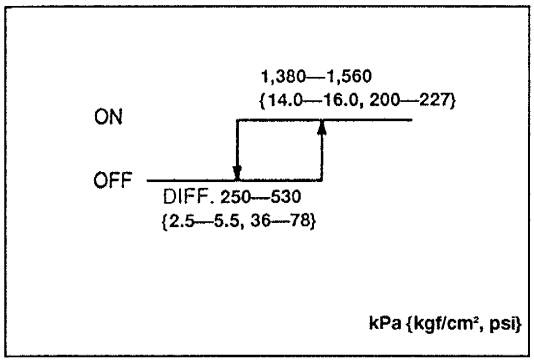

Inspection of middle switch (KL)

1. Connect a manifold gauge to the charging valve.
2. Disconnect the refrigerant pressure switch connector and check for continuity between terminals C and D.
3. If not as specified, replace the refrigerant pressure switch.

COOLING UNIT

Removal / Installation

1. Discharge the refrigerant from the system.
2. Remove the glove compartment cover and undercover.
   (Refer to the 1996 626/MX-6 Workshop Manual, section S.)
3. Remove the A/C duct.
4. Disconnect the A/C amplifier connector.
5. Remove as shown in the figure.
6. Install in the reverse order of removal. Position the unit so that its connections match those of the heater unit and blower unit. Apply clean compressor oil to the O-rings before connecting the fittings; do not apply compressor oil to the fitting nuts. When installing a new cooling unit, add 50 ml {50 cc, 1.7 fl oz} of compressor oil through the high-pressure side of the A/C compressor.

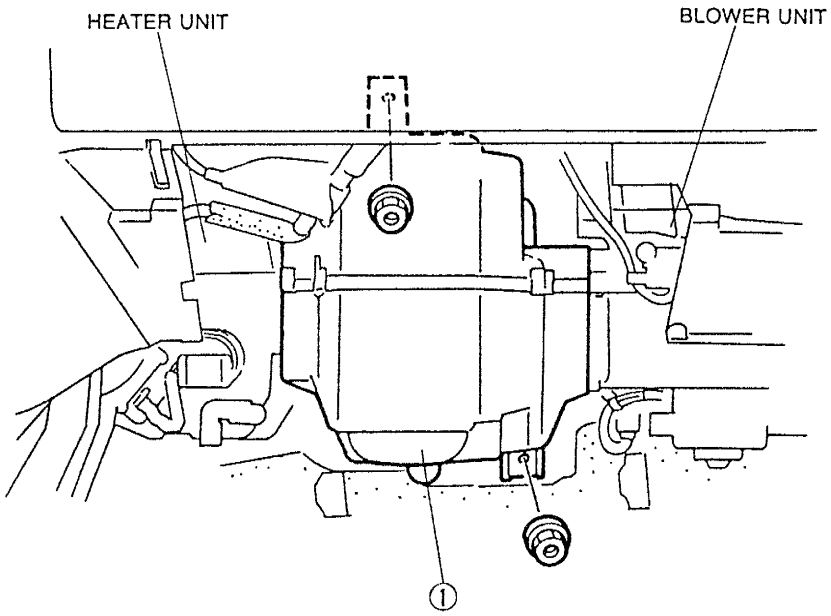

1. Cooling unit

Tightening torque
Outlet pipe: 20—29 N·m {2.0—3.0 kgf·m, 15—21 ft·lbf}
Inlet pipe: 10—19 N·m {1.0—2.0 kgf·m, 8—14 ft·lbf}

Disassembly / Assembly

1. Disassemble in the order shown in the figure.
2. Assemble in the reverse order of disassembly, referring to **Assembly note**. Apply compressor oil before connecting the fittings.

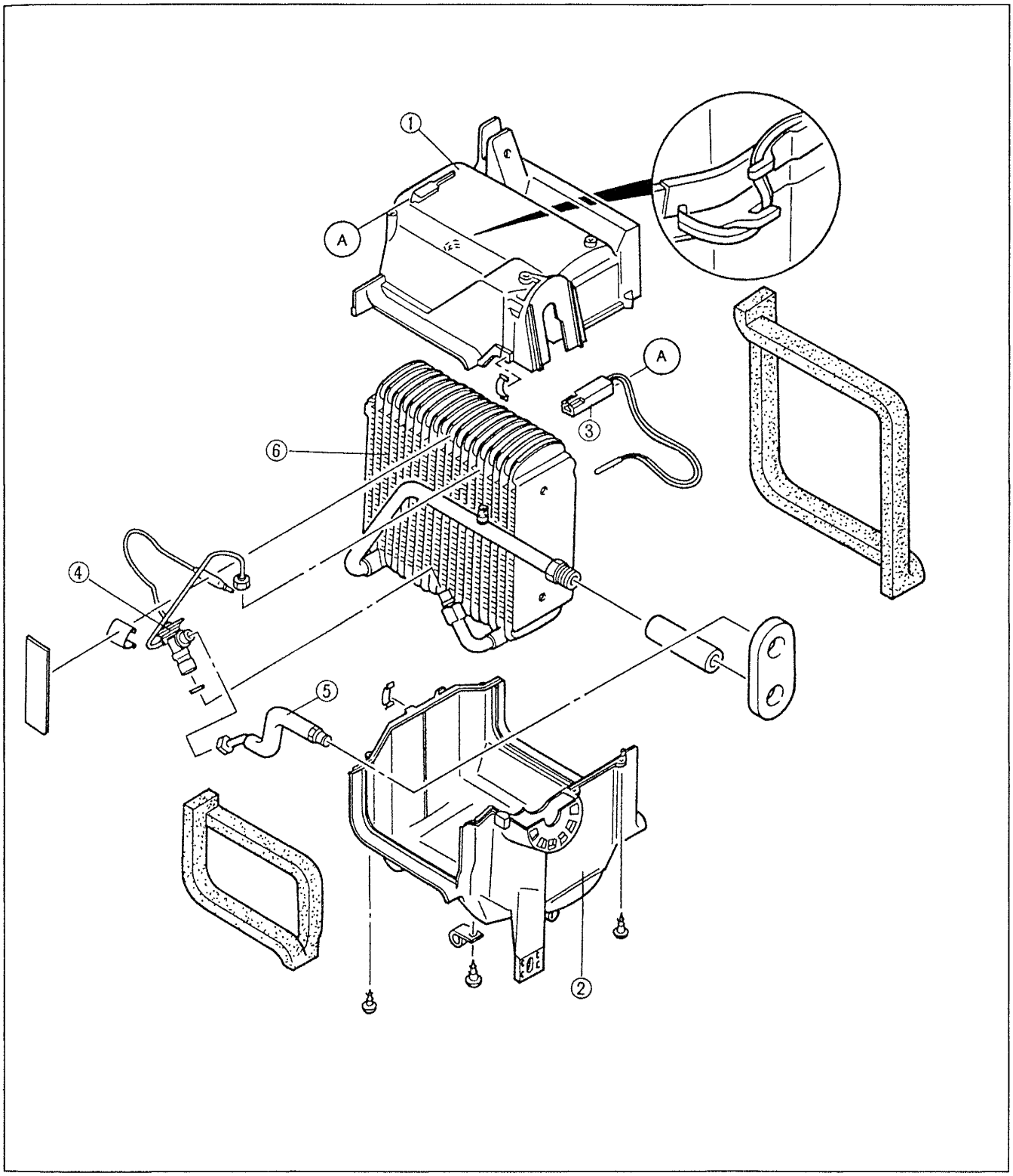

1. Case (upper)
2. Case (lower)
3. Thermoswitch
4. Expansion valve
   Assembly note..... page G–64
5. Pipe
6. Evaporator
   Inspection..... page G–64

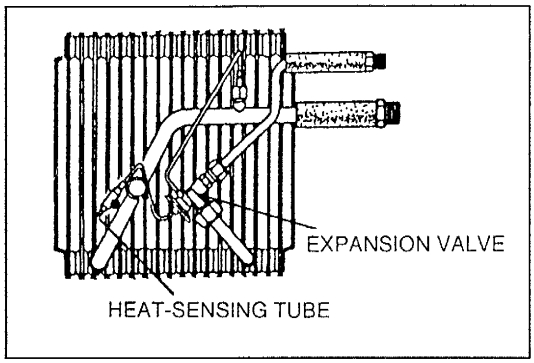

Assembly note
Expansion valve
Replace the O-ring of the expansion valve connector. Install the heat-sensing tube in the position shown in the figure.

Inspection
Evaporator
Check for the following and repair or replace the evaporator as necessary.
1. Cracks
2. Bent fins

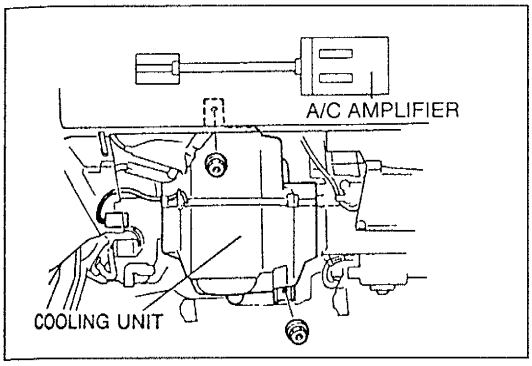

A/C AMPLIFIER

Removal / Installation

1. Remove the cooling unit. (Refer to page G–62.)
2. Remove the A/C amplifier from the cooling unit.
3. Install in the reverse order of removal.

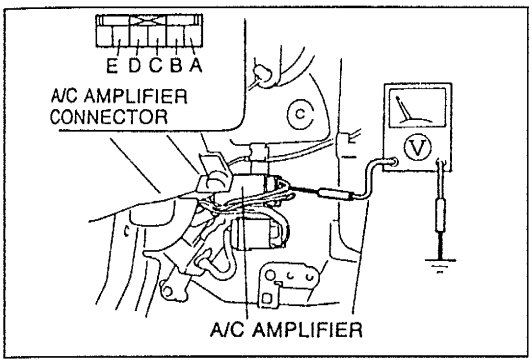

Inspection

1. Turn the ignition switch to ON.
2. Measure the terminal voltage of the A/C amplifier connector.

Terminal voltage list

B+: Battery positive voltage

Terminal	Wire	Connection	Test condition	Voltage (V)	Reference
A	(L)	Ignition switch	Ignition switch at ON	B+	section Z4
			Ignition switch at OFF	0	
B	(L/B)	FS ATX, KL: PCM FS MTX: ECM	A/C compressor on	0	1996 626/MX-6 Workshop Manual, section F1, F2, or F3
			A/C compressor off	B+	
C	(L/W)	Heater control unit	A/C switch and fan switch on	0	page G–42
			A/C switch and fan switch off	B+	
D	(R)	Heater control unit	Fan switch off	B+	page G–42
			Fan switch on	0	
E	(L/Y)	Fan switch Resistor	Fan switch on	B+	—
			Fan switch off	0	

THERMOSWITCH

Removal / Installation

1. Remove the cooling unit. (Refer to page G–62.)
2. Remove the thermoswitch from the cooling unit. (Refer to page G–63.)
3. Install in the reverse order of removal.

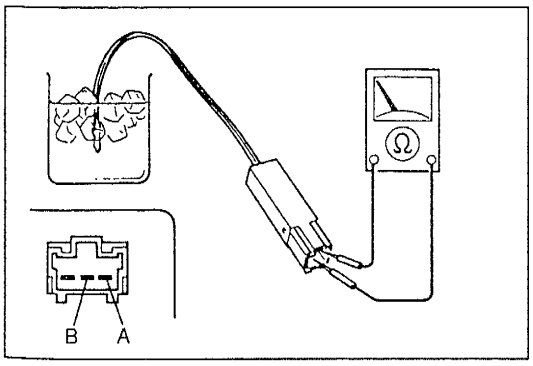

Inspection

1. Immerse the sensor part of the thermoswitch in a container of ice water.
2. Check for continuity between the switch terminals.

Terminal	Temperature	Continuity
A—B	Above 2 °C {36 °F}	Yes
	Below 0 °C {32 °F}	No

3. If not as specified, replace the thermoswitch.

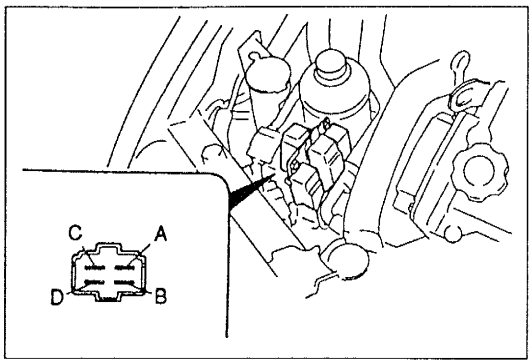

RELAYS

Inspection

1. Remove the relay.
2. Connect battery positive voltage and check for continuity between the relay terminals as indicated below.
3. If not as specified, replace the relay.

Condenser fan low relay, high relay No.1 and No.2

O–O : Continuity B+: Battery positive voltage

Connection		Terminal			
B+	GND	A	B	C	D
—	—	O	O		
A	B			O	O

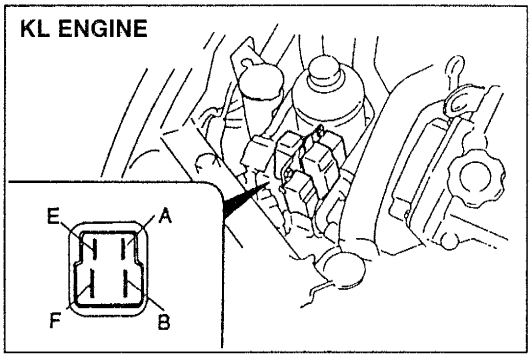

Blower relay

O–O : Continuity B+: Battery positive voltage

Connection		Terminal			
B+	GND	A	E	F	B
—	—	O	O		
A	E			O	O

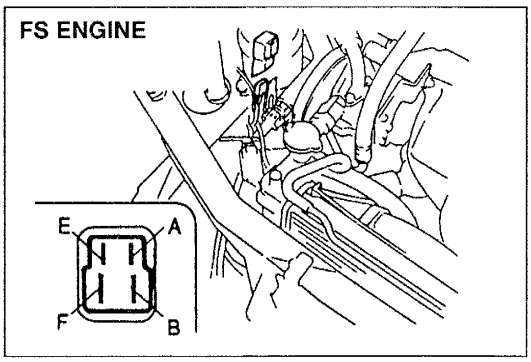

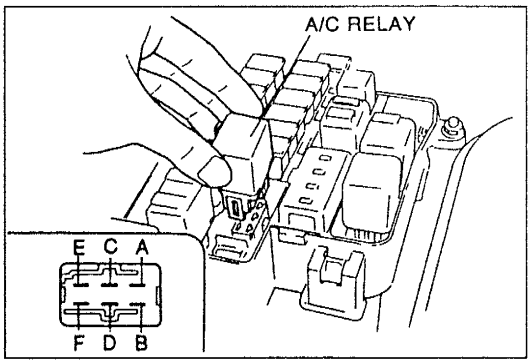

A/C relay

O–O : Continuity O–|◀–O : Diode B+: Battery positive voltage

Connection		Terminal					
B+	GND	D	A	B	C	E	F
—	—	O–▶–O	O–◀–O		O–▶–O	O	O
D	A				O	O	

REFRIGERANT LINES

On-vehicle Inspection

Check for leaks at all connections by using a leak tester. (Refer to page G–46.)
Repair or replace as necessary.

Removal / Installation

1. Discharge the refrigerant from the system.
2. Remove as shown in the figure. Immediately plug the open fittings to keep moisture out of the system.
3. Install as shown in the figure. Apply clean compressor oil to the O-rings. Do not apply compressor oil to the fitting nuts. When installing a new pipe or hose, add 6 ml {6 cc, 0.2 fl oz} of compressor oil through the high-pressure side of the A/C compressor.
4. Evacuate, charge, and test the air conditioner system.

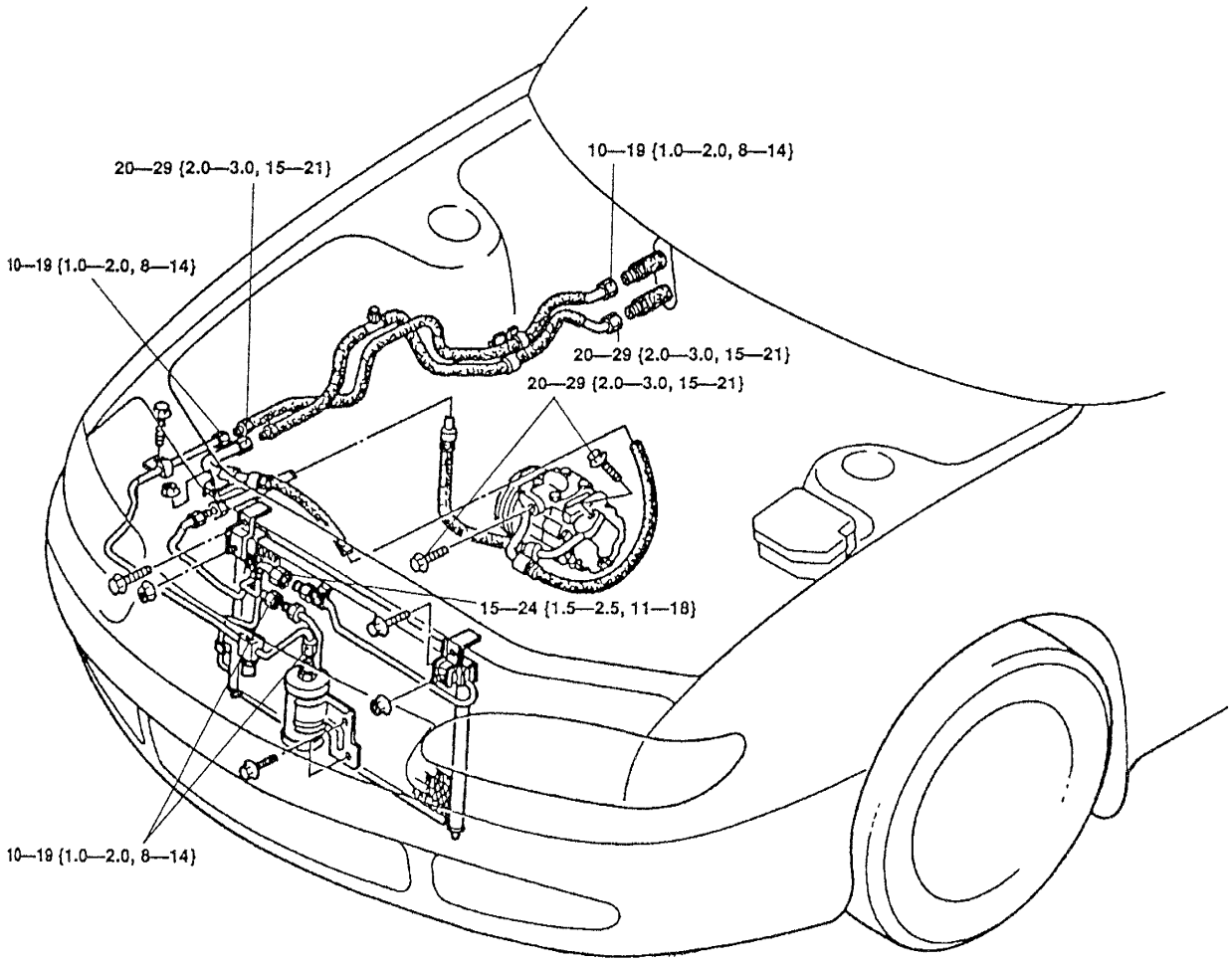

N·m {kgf·m, ft·lbf}

CONNECTOR LOCATIONS

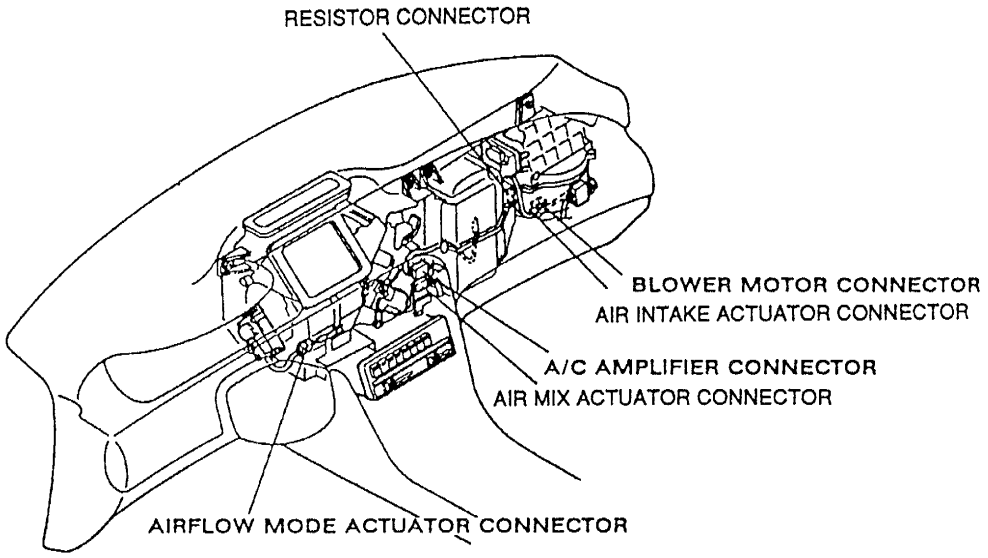

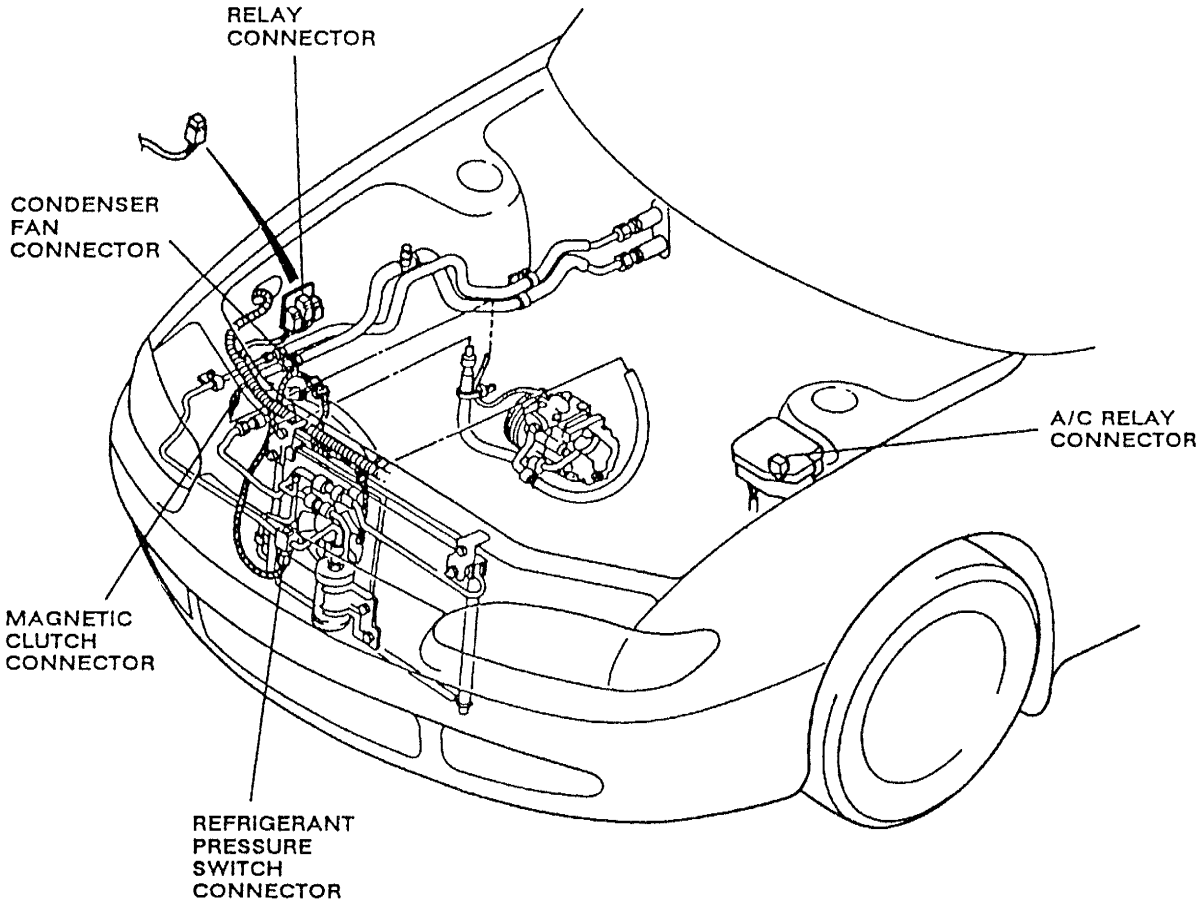

Before beginning any service procedure, refer to section S of this manual for air bag system service warnings.

REAR WINDOW DEFROSTER

REAR WINDOW DEFROSTER

STRUCTURAL VIEW

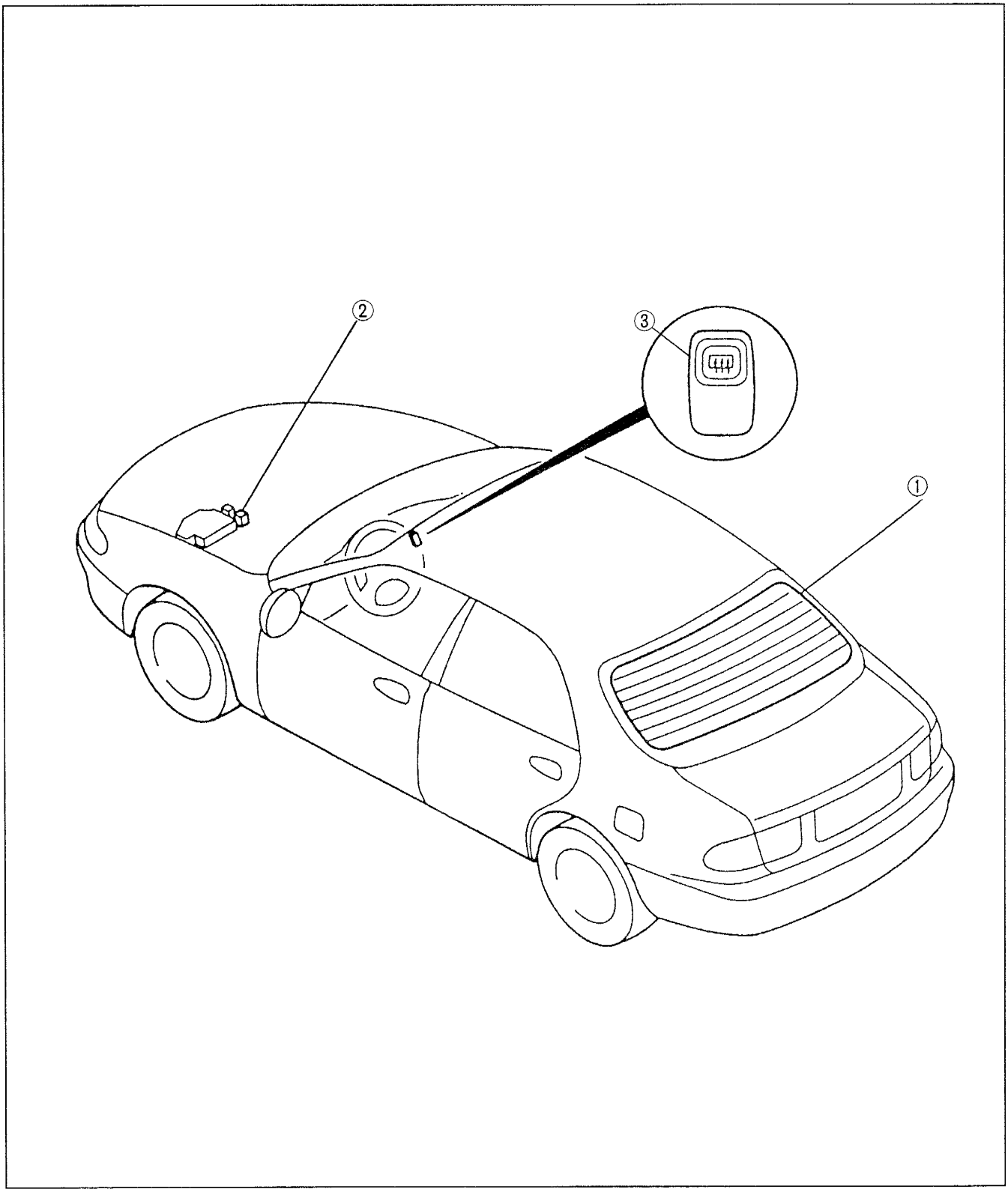

1. Filament
   - Inspection.....page I1–9
   - Repair .....page I1–9
2. Rear window defroster relay
   - Inspection.....page I1–9
3. Rear window defroster switch
   - Removal / Installation .....section Z4
   - Inspection.....page I1–9

SYSTEM DIAGRAM

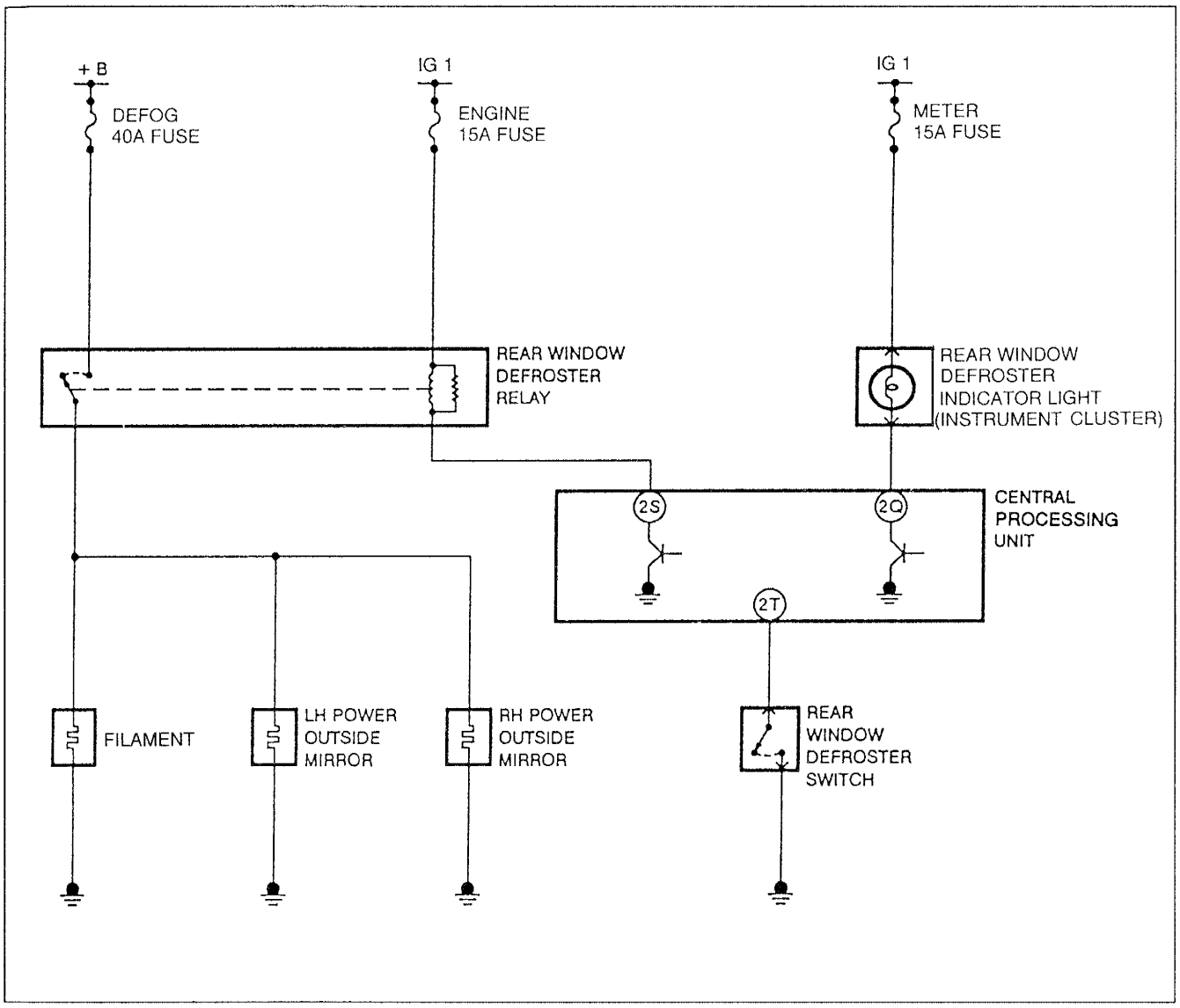

Description

The rear window defroster system is comprised of the rear window defroster relay, the filament, the LH and RH power outside mirrors, the rear window defroster switch, and the CPU.

System Operation

- When the ignition switch is at ON, the CPU applies battery positive voltage from terminal 2T to the rear window defroster switch. If the rear window defroster switch is pressed, current flows from CPU terminal 2T to ground through the closed switch contacts. This signals the CPU to ground the rear window defroster relay at CPU terminal 2S. Voltage from the engine fuse is then applied to the rear window defroster relay coil, and current from the engine fuse flows through the relay coil to energize the relay. The relay's contacts then close and allow power from the defog fuse to be applied to the filaments of the rear window defroster and power outside mirrors. The elements warm to dissipate any fog or ice. The CPU operates the rear window defroster even after the rear window defroster switch is released.
- The rear window defroster indicator light is powered by the meter fuse when the ignition is at ON. CPU grounds the defroster indicator light to illuminate the indicator while the rear window defroster switch is in the on position.
- The CPU initially operates the rear defroster for approximately 15 to 17 minutes. After this, the CPU cycles the system off for 3 minutes and then on for 2 minutes while the rear window defroster indicator light continues to illuminate. The rear window defroster system is cancelled and the indicator light goes out when either the ignition or the rear window defroster switch is pressed again.

TROUBLESHOOTING
Circuit Diagram

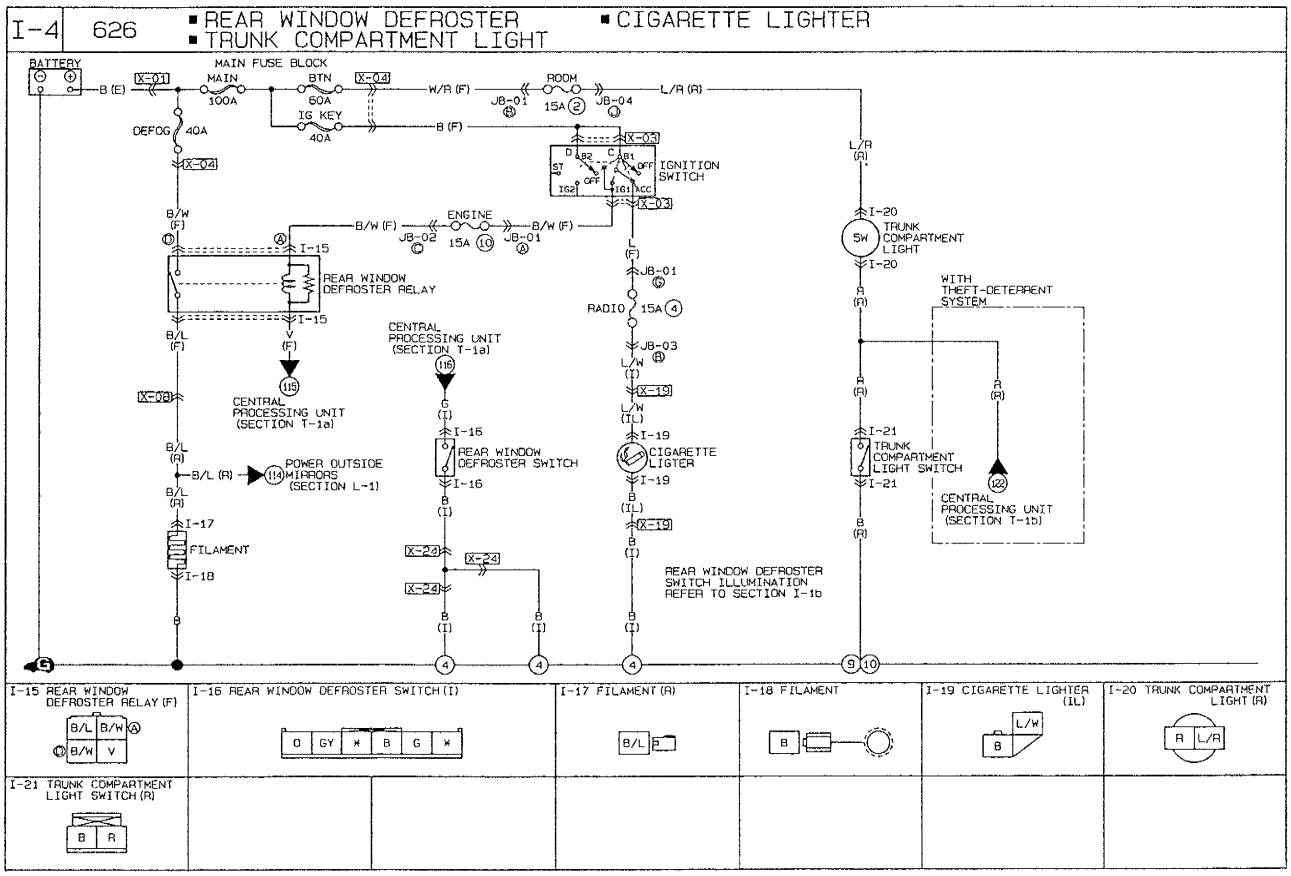

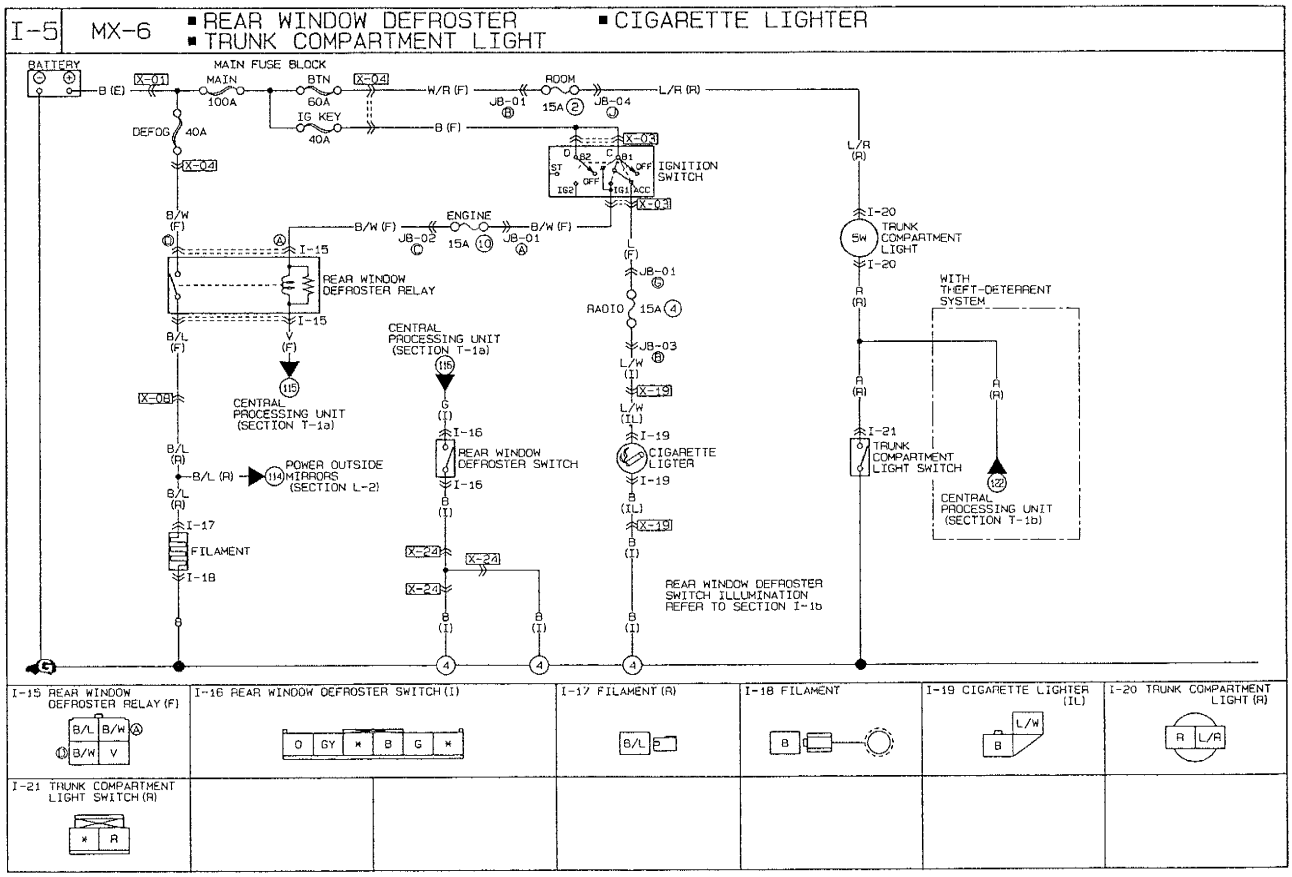

Connector Locations

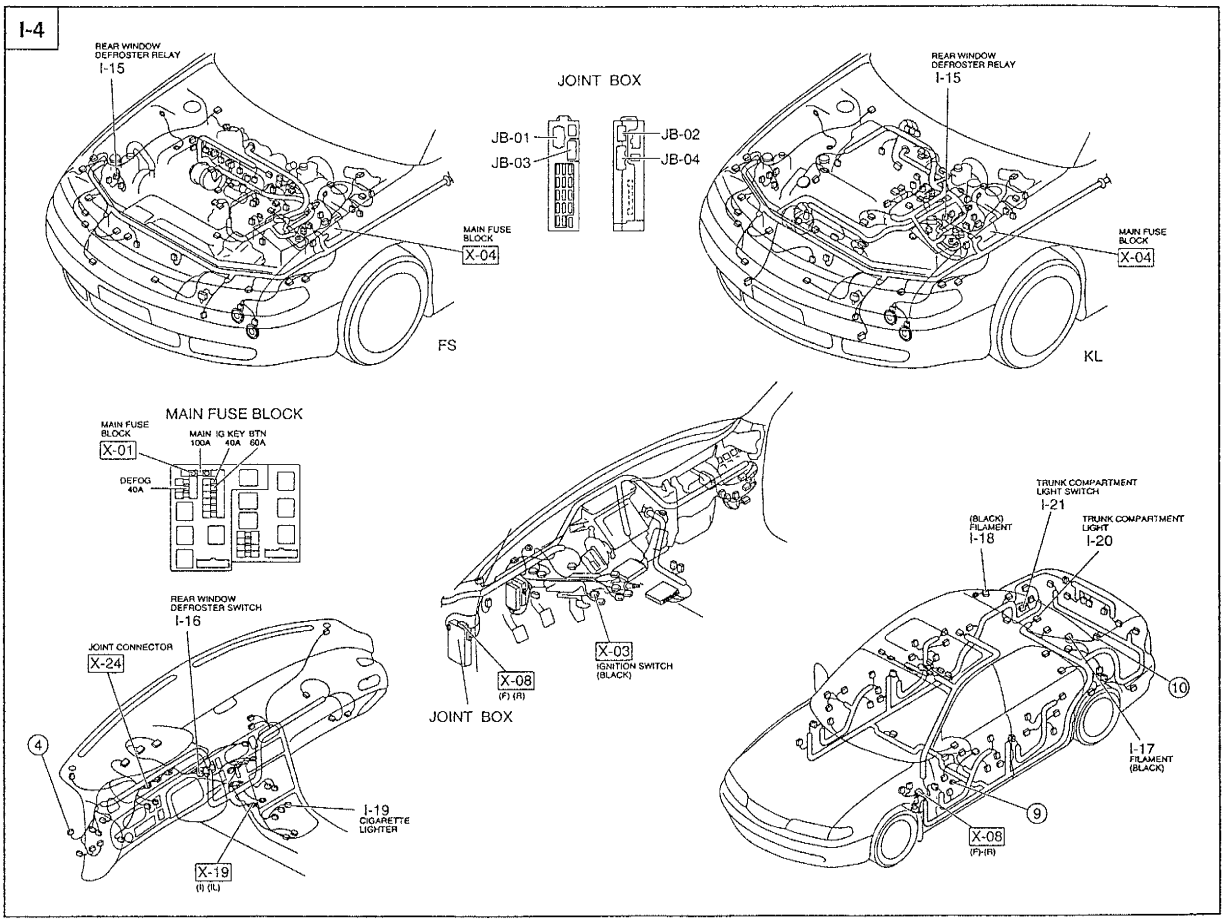

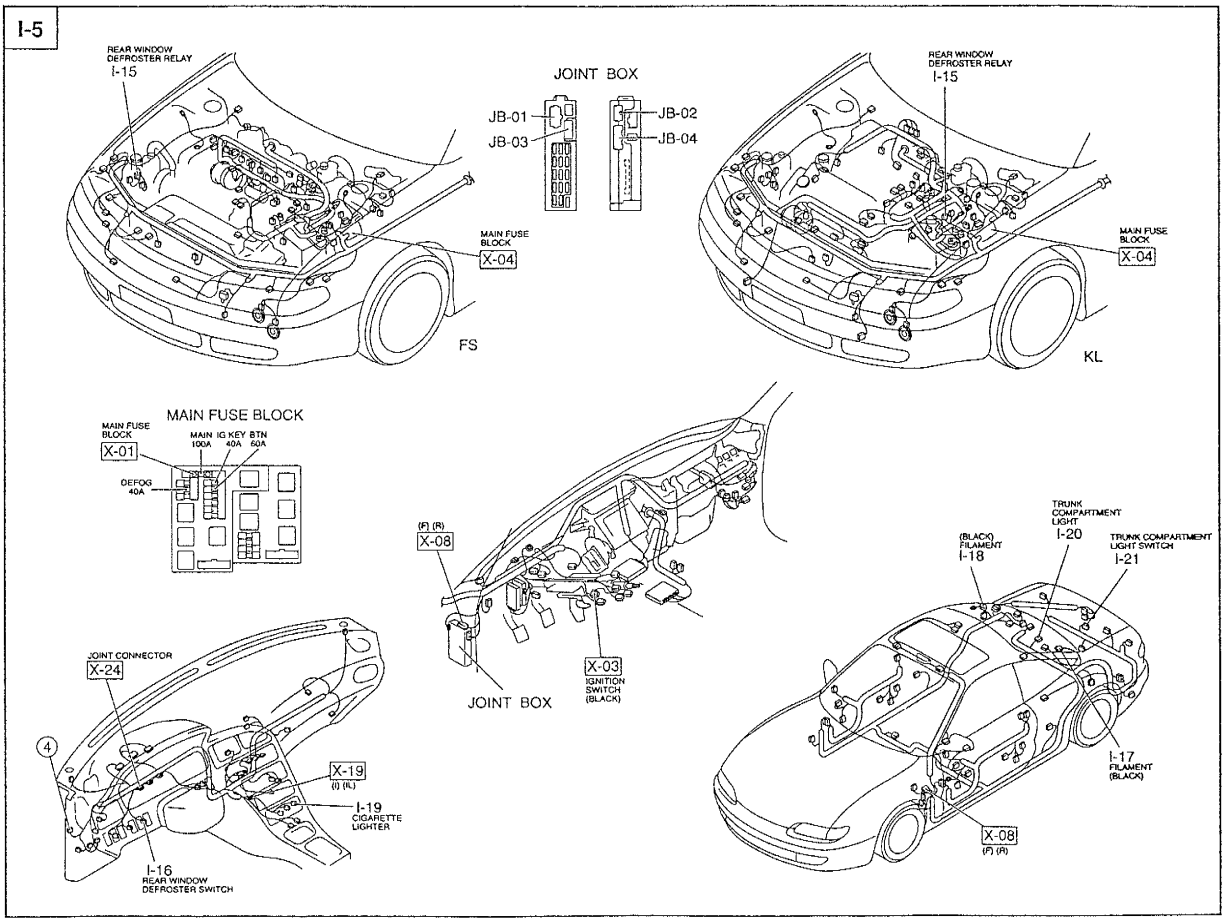

Checklist

	Procedure / Proper operation	Symptom	Flowchart No.
	Operate rear window defroster switch and verify that rear window defroster turns on and off.	Rear window defroster does not operate	1

Flowchart No.1	Symptom	Rear window defroster does not operate

Possible cause

- Burnt DEFOG 40A fuse
- Damaged rear window defroster relay
- Damaged rear window defroster switch
- Damaged rear window defroster
- Damaged CPU
- Open or short circuit in wiring harness
- Poor connection of connector

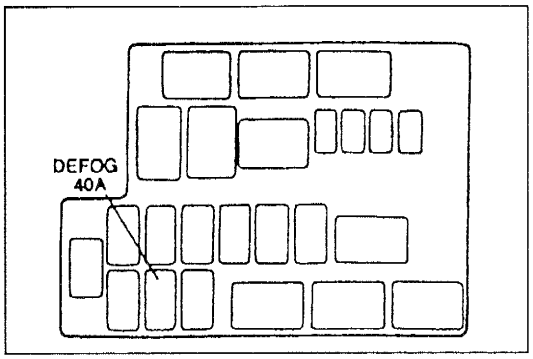

Step 1

Check the DEFOG 40A fuse in the main fuse block.

Fuse	Action
OK	Go to Step 2
Burnt	Replace fuse after checking and repairing wiring harness

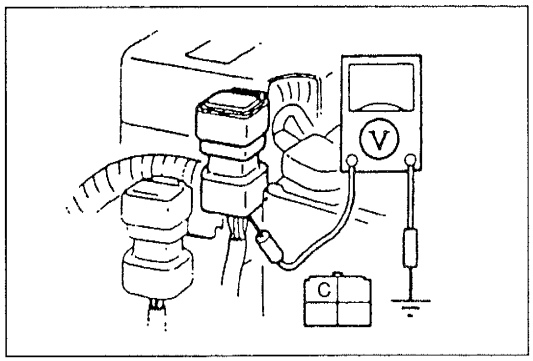

Step 2

1. Turn the ignition switch to ON.
2. Press the rear window defroster switch.
3. Measure the voltage at terminal C (B/L) of the rear window defroster relay connector.

B+: Battery positive voltage

Voltage	Action
B+	Go to Step 3
Other	Go to Step 5

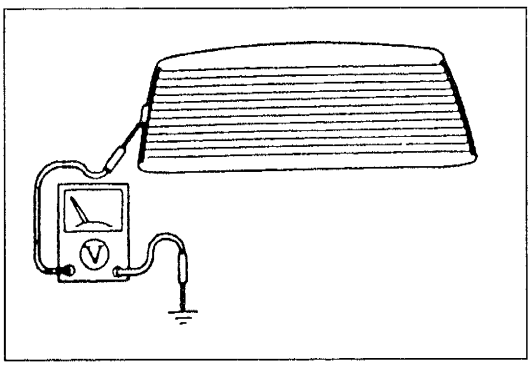

Step 3

Measure the voltage at the terminal (B/L) of the filament.

B+: Battery positive voltage

Voltage	Action
B+	Go to Step 4
Other	Repair wiring harness (Rear window defroster relay—Filament)

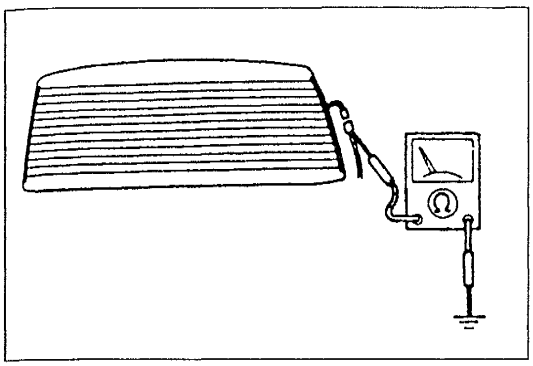

Step 4

1. Turn the ignition switch to OFF.
2. Disconnect the ground-side filament connector.
3. Check for continuity between the (B) terminal wire of the filament connector and ground.

Continuity	Action
Yes	Inspect filament (Refer to page I1–9)
No	Repair wiring harness (Filament—GND)

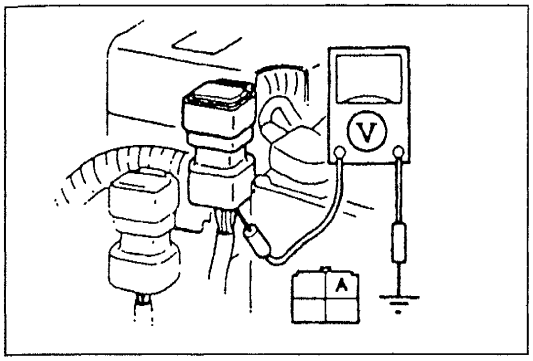

Step 5

Measure the voltage at terminal A (B/W) of the rear window defroster relay connector.

B+: Battery positive voltage

Voltage	Action
B+	Go to Step 6
Other	Repair wiring harness (ENGINE 15A fuse—Rear window defroster relay)

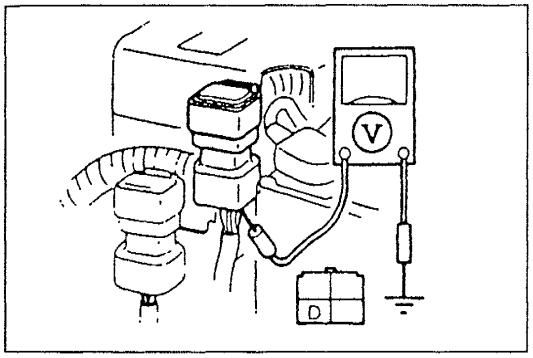

Step 6

Measure the voltage at terminal D (B/W) of the rear window defroster relay connector.

B+: Battery positive voltage

Voltage	Action
B+	Go to Step 7
Other	Repair wiring harness (DEFOG 40A fuse—Rear window defroster relay)

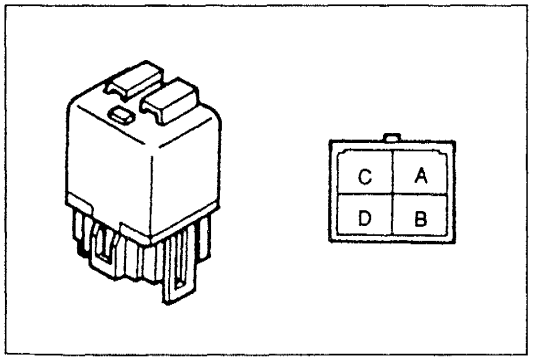

Step 7

1. Turn the ignition switch to OFF.
2. Remove the rear window defroster relay.
3. Check for continuity between the relay terminals.

O—O : Continuity B+: Battery positive voltage

	Terminal			
Step	A	B	C	D
1	O——	——O		
2	B+	GND	O——	——O

4. If correct, install the relay and go to Step 8.
5. If not as specified, replace the relay.

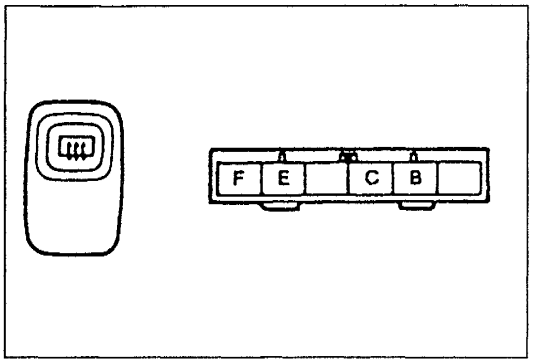

Step 8
1. Remove the rear window defroster switch.
2. Check for continuity between the switch terminals.

O—O : Continuity

Position \ Terminal	B	C	E	F
Normal			O—(Ω)—O	
Push	O——O		O—(Ω)—O	

3. If correct, go to Step 9.
4. If not as specified, replace the switch.

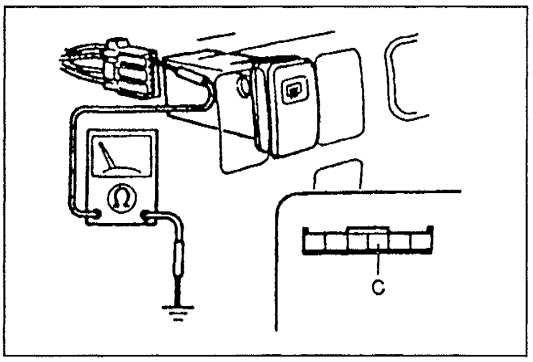

Step 9
Check for continuity between terminal C (B) of the rear window defroster switch connector and ground.

Continuity	Action
Yes	Install rear window defroster switch and go to Step 10
No	Repair wiring harness (Rear window defroster switch—GND)

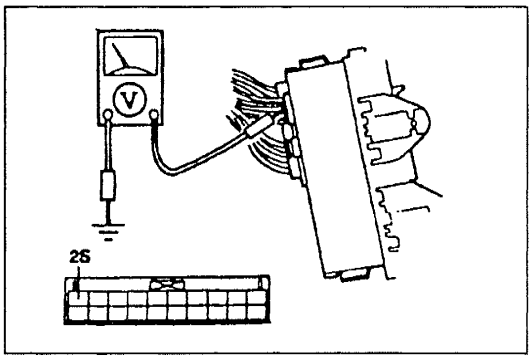

Step 10
1. Turn the ignition switch to ON.
2. Measure the voltage at terminal 2S (V) of the CPU connector.

B+: Battery positive voltage

Voltage	Action
B+	Go to Step 11
Other	Repair wiring harness (Rear window defroster relay—CPU)

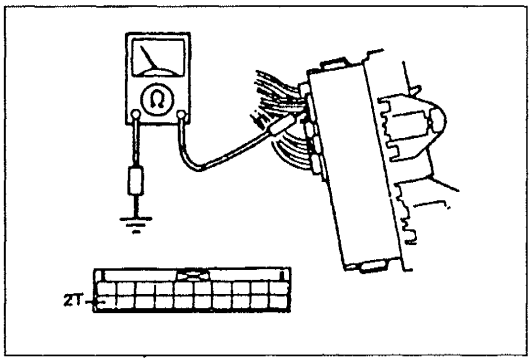

Step 11
1. Turn the ignition switch to OFF.
2. Disconnect the CPU connector.
3. Press on the rear window defroster switch.
4. Check for continuity between terminal 2T (G) of the CPU connector and ground.

Continuity	Action
Yes	Replace CPU
No	Repair wiring harness (CPU—Rear window defroster switch)

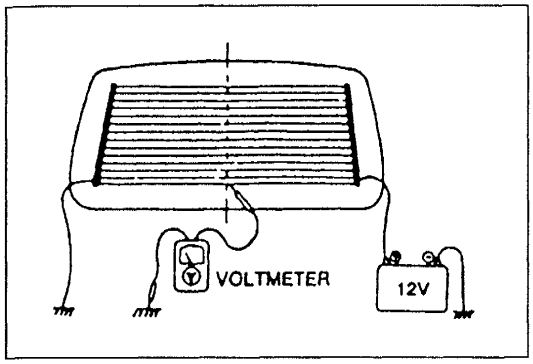

FILAMENT

Inspection

1. Turn the ignition switch to ON.
2. Press the rear window defroster switch.
3. Connect the (+) terminal of a voltmeter to the center of each filament and the (–) terminal to the body. The standard voltage at the center of each filament is approximately **6V**. If the meter indication is low or zero, there is a short circuit between the center and the ground side of the filament. If the indication is high, the malfunction is between the center and positive side.

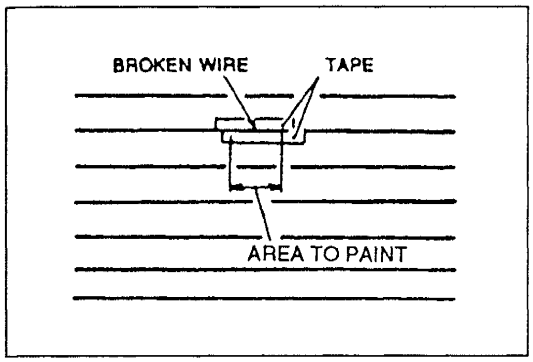

Repair

Caution

- **Use only paint thinner or ethyl alcohol for cleaning. Other solvents can damage the surrounding filament.**

1. Use paint thinner or ethyl alcohol to clean around the damaged section of the filament.
2. Attach tape above and below the damaged section of the filament.
3. Using a small brush or marking pen, repair the filament with silver paint or equivalent.
4. Use a blow dryer heated to **150°C {302°F}** for **30 minutes** or let the paint set for **24 hours** at **25°C {77°F}** to allow it to dry completely. Do not use the defroster until the paint is dry.

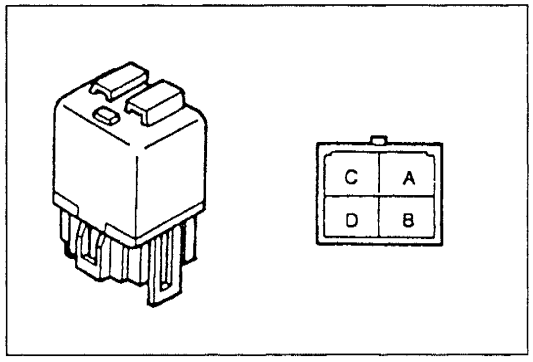

REAR WINDOW DEFROSTER RELAY

Inspection

1. Check for continuity between the terminals of the rear window defroster relay.

O–O : Continuity B+: Battery positive voltage

Step	Terminal A	Terminal B	Terminal C	Terminal D
1	O	O		
2	B+	GND	O	O

2. If not as specified, replace the relay.

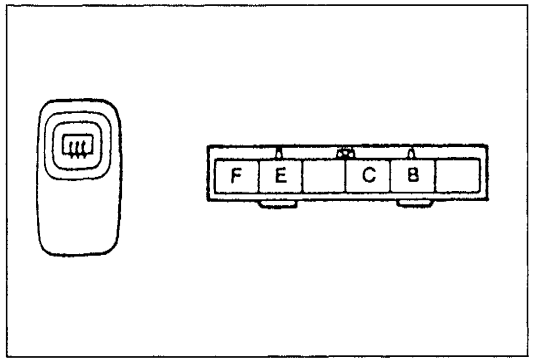

REAR WINDOW DEFROSTER SWITCH

Inspection

1. Remove the rear window defroster switch.
2. Check for continuity between the switch terminals.

O–O : Continuity

Position \ Terminal	B	C	E	F
Normal			O	O
Push	O	O	O	O

3. If not as specified, replace the switch.

Before beginning any service procedure, refer to section S of this manual for air bag system service warnings.

INTERIOR LIGHTING SYSTEM

INTERIOR LIGHTING SYSTEM

STRUCTURAL VIEW

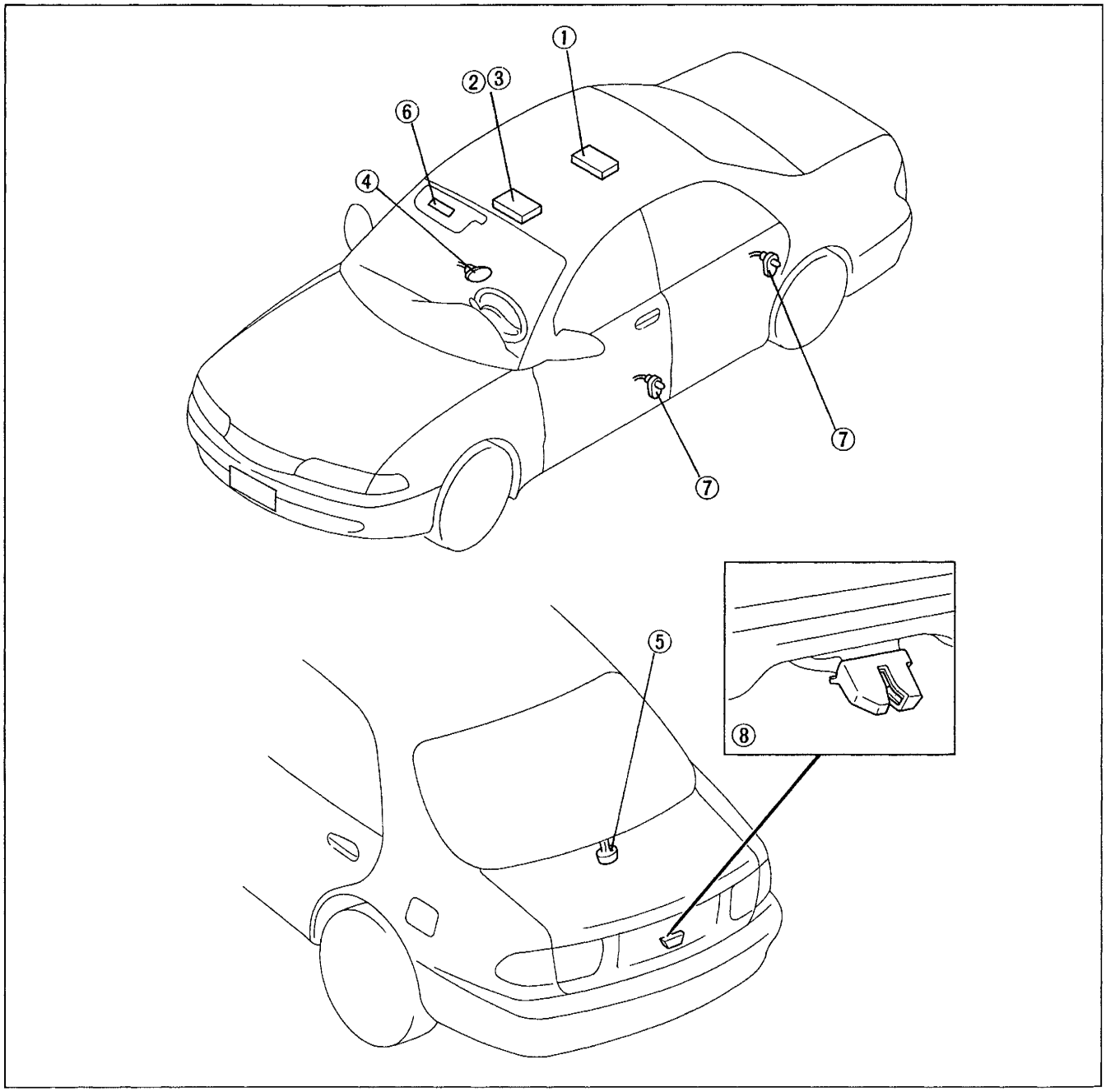

1. Interior light
   - Troubleshooting ..... page I2– 5
   - Removal / Installation
     - (626) [without sunroof] ..... page I2–18
2. Spot light
   - Troubleshooting ..... page I2– 5
   - Removal / Installation
     - (626) [with sunroof] ..... page I2–18
3. Interior and spot light
   - Troubleshooting ..... page I2– 5
   - Removal / Installation
     - (MX-6) [with sunroof]..... page I2–19
     - (MX-6) [without sunroof]..... page I2–19
4. Courtesy light
   - Bulb replacement..... page I2–20
5. Trunk compartment light
   - Removal / Installation..... page I2–20
6. Vanity mirror illumination
   - Inspection..... page I2–20
7. Door switch
   - Inspection..... page I2–20
8. Trunk compartment light switch
   - Inspection..... page I2–20

SYSTEM DIAGRAM

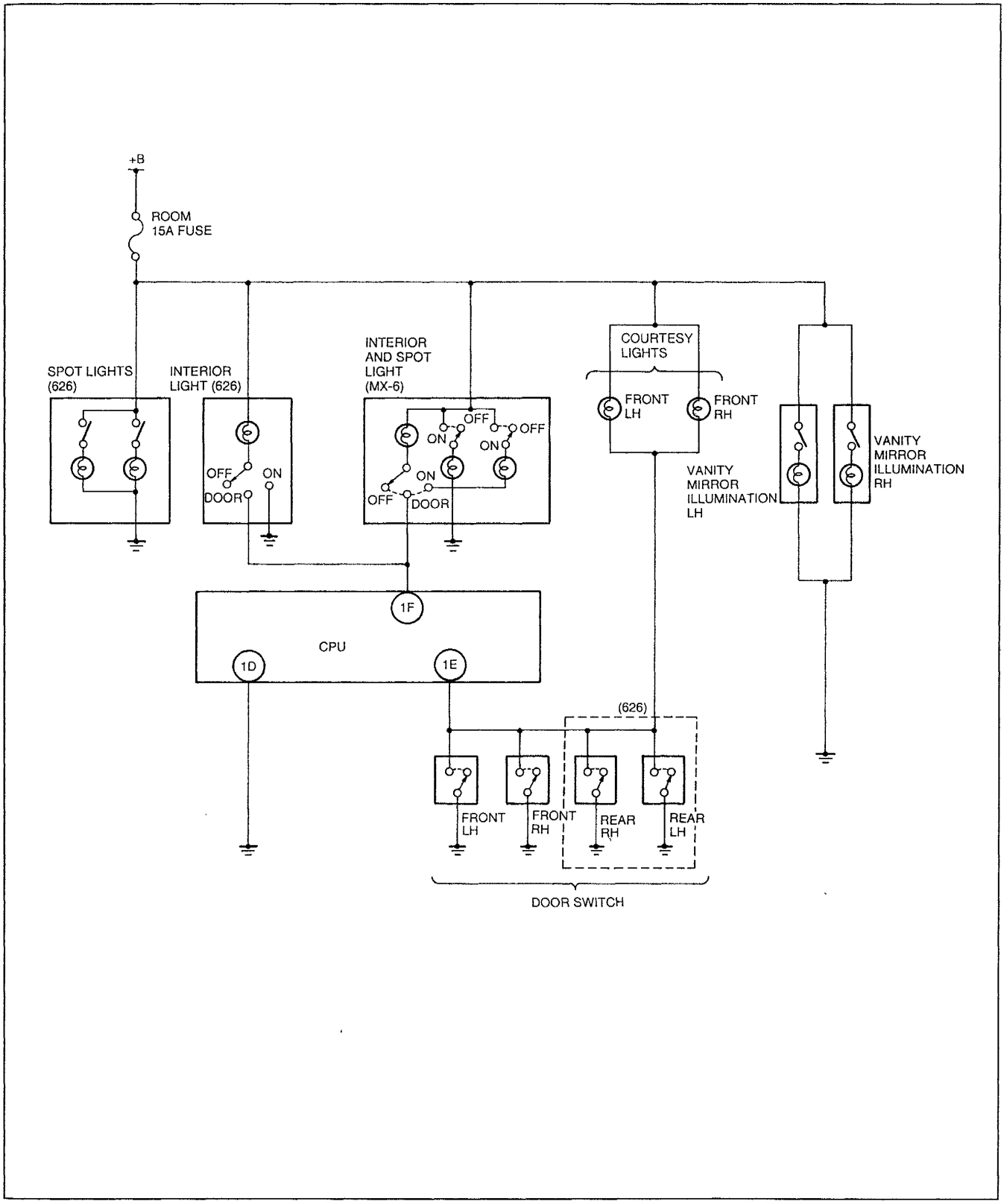

Description
The illuminated entry feature turns off the interior light and courtesy lights after the doors are closed.

Operation
The illuminated entry features are controlled by the central processing unit (CPU).

Illuminated entry

When a door is opened, the door switch closes to apply ground to CPU terminal 1E and the courtesy lights. The courtesy lights turn on while the doors are open since a ground path is now provided. The CPU responds by turning on the transistor at CPU terminal 1F. The transistor at terminal 1F turns on the interior light by applying ground to the light. When the doors are closed, the door switches open and the courtesy lights immediately turn off.

Vanity mirror illumination

To use the vanity mirror, lift the vanity mirror cover. The vanity mirror illumination will then come on.

SPECIFICATIONS

Item	Model	Wattage
Interior lights	Interior light	10W × 1
	Spot light	5W × 2
	Courtesy light	3.4W × 2
	Trunk compartment light	5W × 1
	Vanity mirror illumination light	2W × 1

TROUBLESHOOTING
626
Circuit diagram

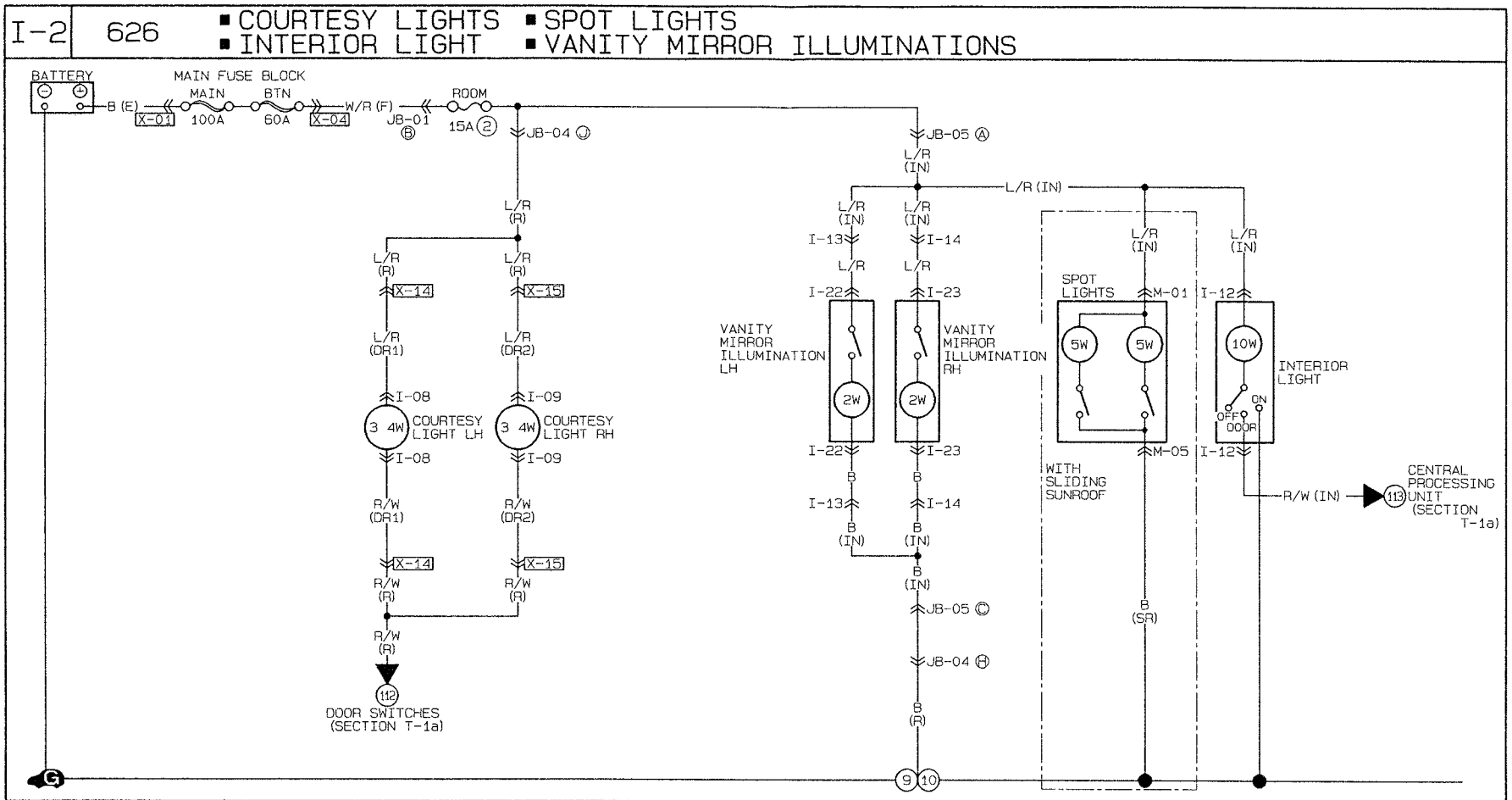

I-08 COURTESY LIGHT LH (DR1)	I-09 COURTESY LIGHT RH (DR2)	I-12 INTERIOR LIGHT (IN)	I-13 INTERIOR LIGHT (IN) - VANITY MIRROR ILLUMINATION LH		I-14 INTERIOR LIGHT (IN) - VANITY MIRROR ILLUMINATION RH	
L/R R/W	L/R R/W	L/R R/W	(IN) L/R B	B L/R	(IN) L/R B	B L/R
I-22 VANITY MIRROR ILLUMINATION LH	I-23 VANITY MIRROR ILLUMINATION RH	M-01 SPOT LIGHTS (IN)	M-05 SPOT LIGHTS (SR)			
B L/R	B L/R	L/R G/O	G/O L/W L/G L/Y L B			

I-2

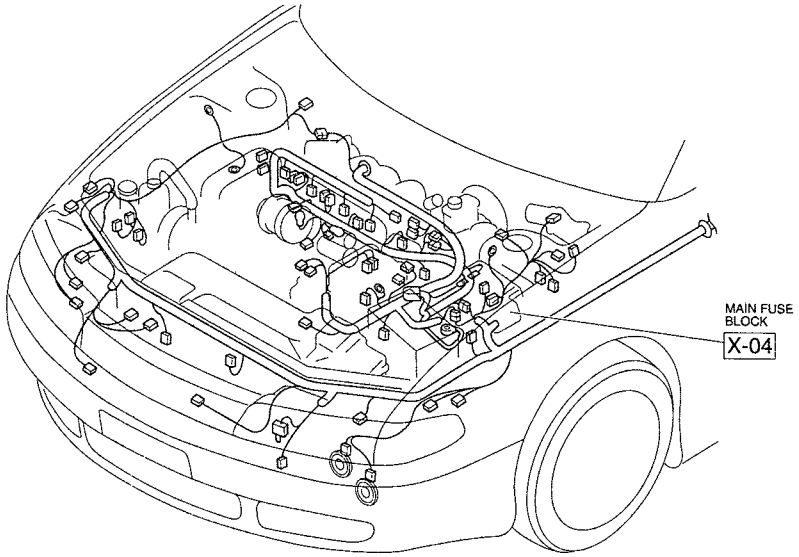
MAIN FUSE BLOCK
X-04

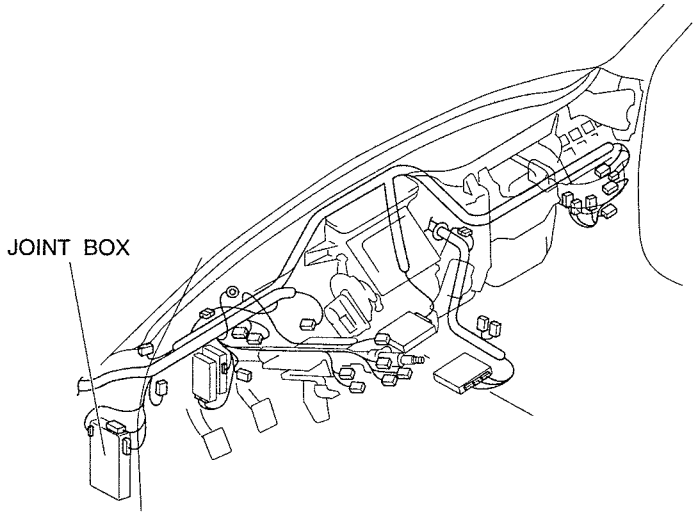
JOINT BOX

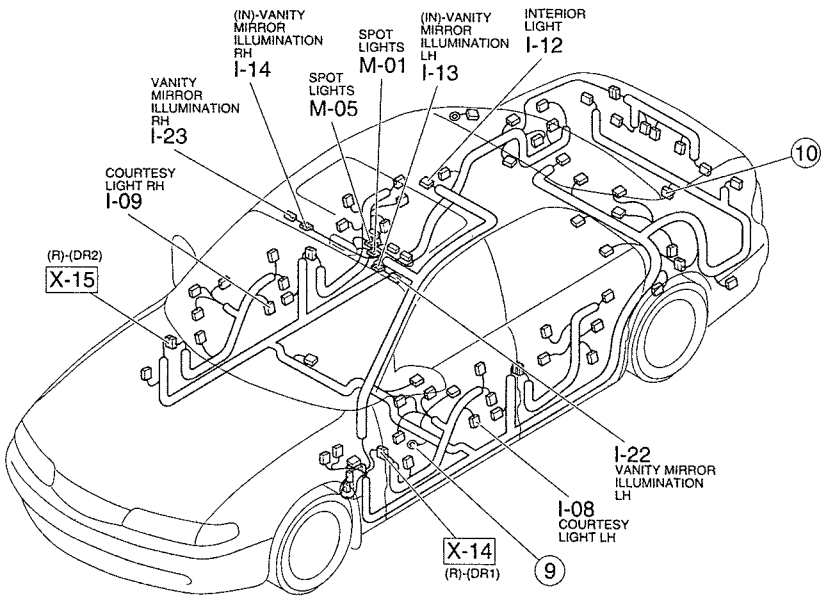
(IN)-VANITY MIRROR ILLUMINATION RH
I-14
SPOT LIGHTS
M-01
(IN)-VANITY MIRROR ILLUMINATION LH
I-13
INTERIOR LIGHT
I-12
VANITY MIRROR ILLUMINATION RH
I-23
SPOT LIGHTS
M-05
COURTESY LIGHT RH
I-09
(R)-(DR2)
X-15
10
I-22
VANITY MIRROR ILLUMINATION LH
I-08
COURTESY LIGHT LH
X-14
(R)-(DR1)
9

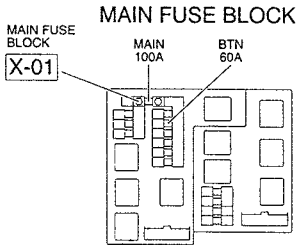
MAIN FUSE BLOCK
MAIN FUSE BLOCK
X-01
MAIN 100A
BTN 60A

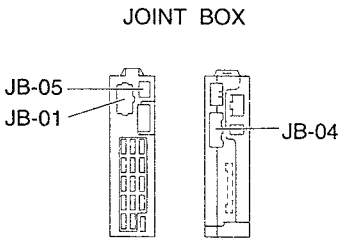
JOINT BOX
JB-05
JB-01
JB-04

MX-6
Circuit diagram

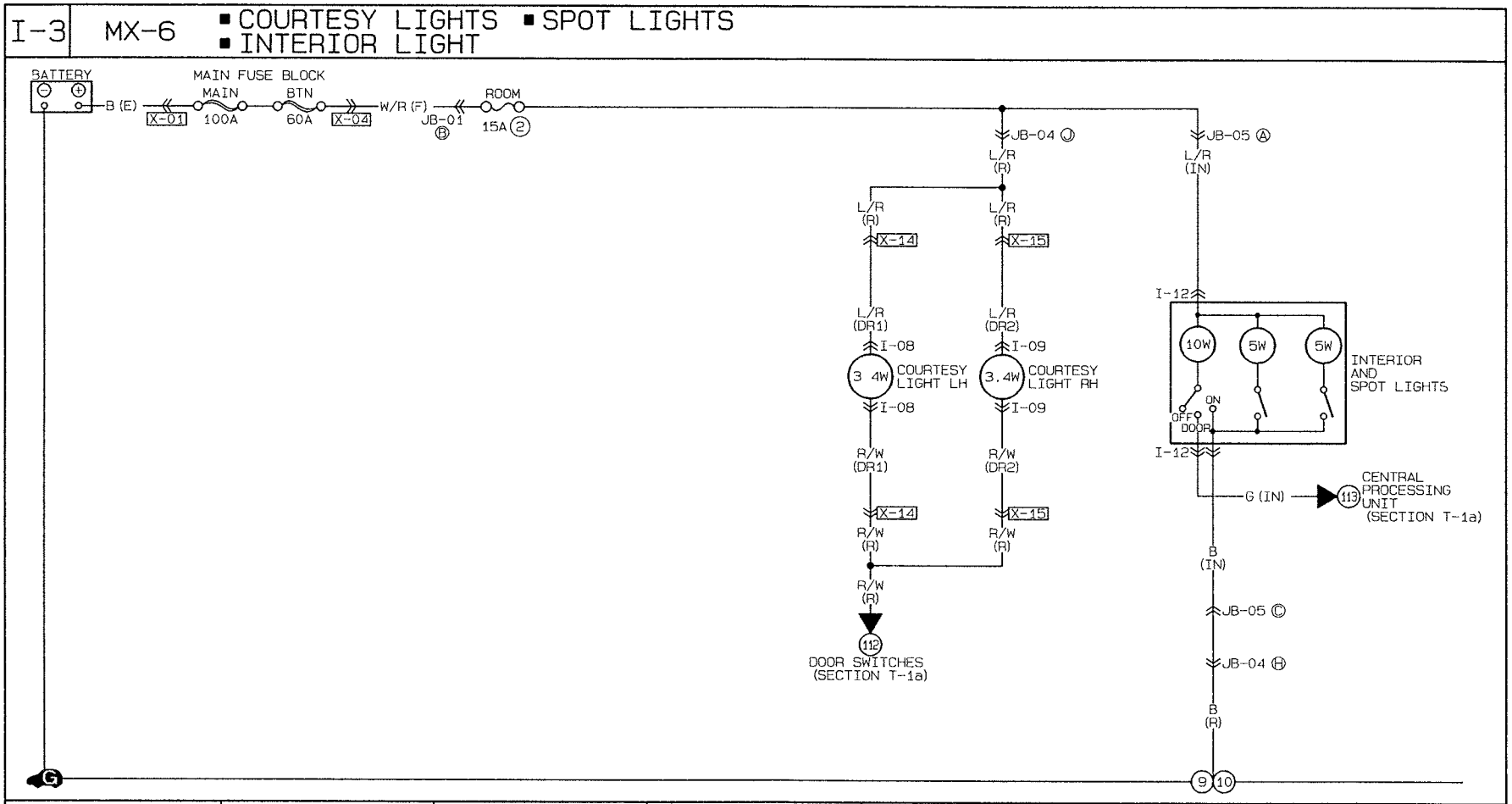

I-08 COURTESY LIGHT LH (DR1)	I-09 COURTESY LIGHT RH (DR2)	I-12 INTERIOR AND SPOT LIGHTS (IN)				
L/R R/W	L/R R/W	G/O L/R B G				

Connector locations

I-3

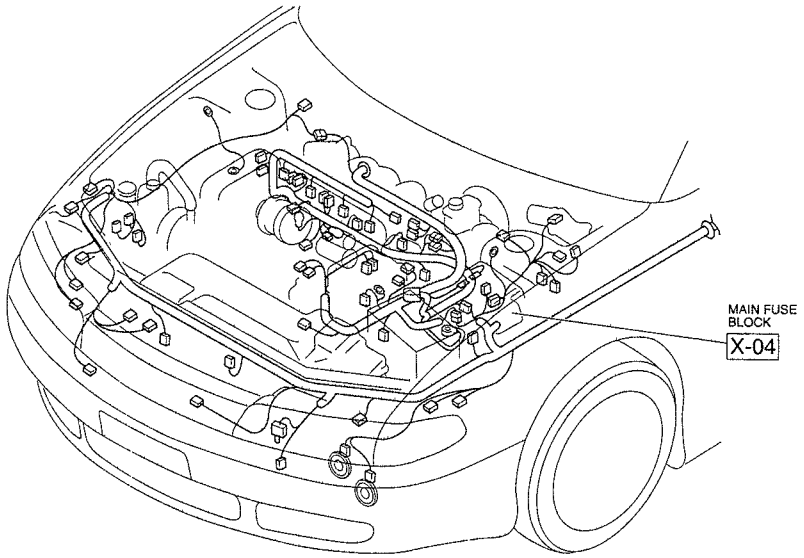

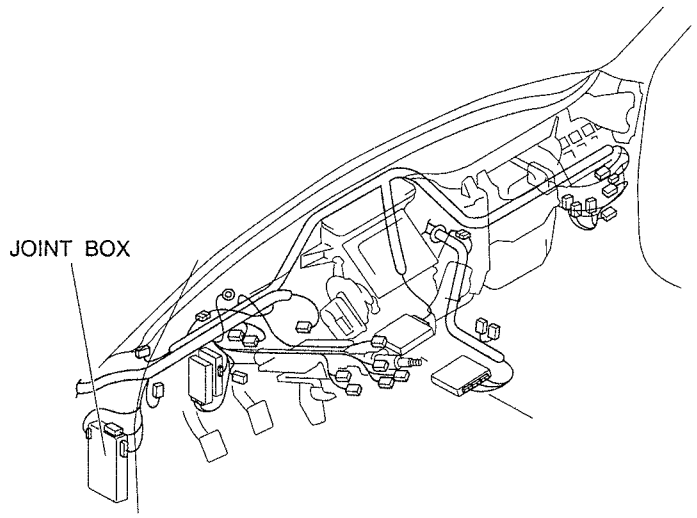

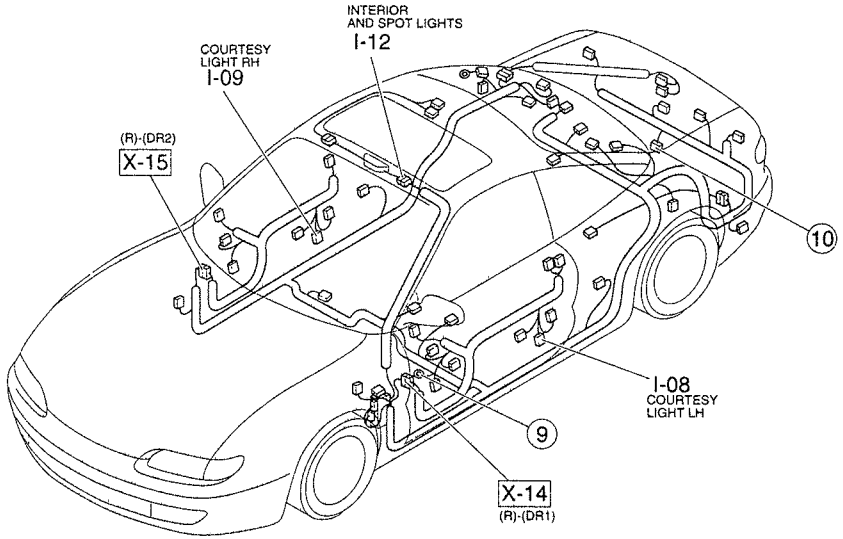

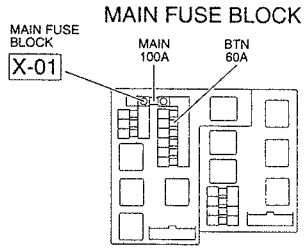

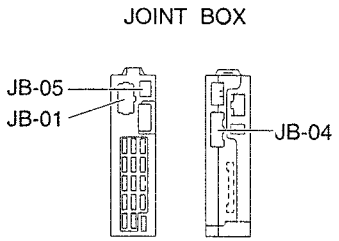

Checklist

Procedure / Proper operation	Symptom	Flowchart No.
Interior light, spot light, courtesy light 1. Turn interior light and spot light switch on. 2. Verify that interior light and spot lights illuminate. 3. Set interior light switch to door. 4. Verify that interior light and courtesy lights illuminate when any door is opened.	Interior light does not illuminate [626] (Spot light function normally)	1
	Spot light does not illuminate [626] (Interior light function normally)	2
	Interior light does not illuminate [MX-6] (Spot light function normally)	3
	Spot light does not illuminate [MX-6] (Interior light function normally)	4
	Interior light illuminates but courtesy lights do not illuminate	5
	Interior light and courtesy lights stay on with all doors closed	6
Vanity mirror illumination 1. Lift vanity mirror cover. 2. Verify that vanity mirror illumination operates.	Vanity mirror illumination does not turn on	7

Flowchart No.1	Symptom	Interior light does not illuminate [626] (Spot light function normally)

Possible cause
- Burnt interior light bulb
- Damaged interior light
- Damaged CPU
- Damaged door switch
- Open or short circuit in wiring harness
- Poor connection of connector

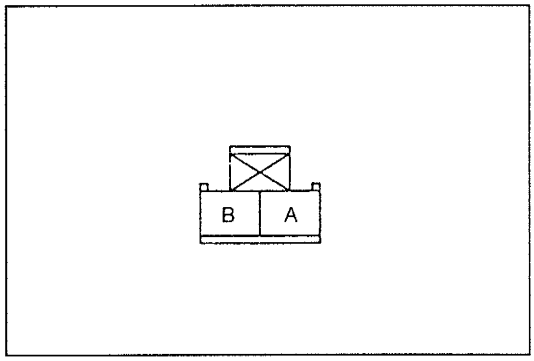

Step 1
Measure the voltage at terminal A (L/R) of the interior light connector.

B+: Battery positive voltage

Voltage	Action
B+	Go to Step 2
Other	Repair wiring harness (ROOM 15A fuse—Interior light)

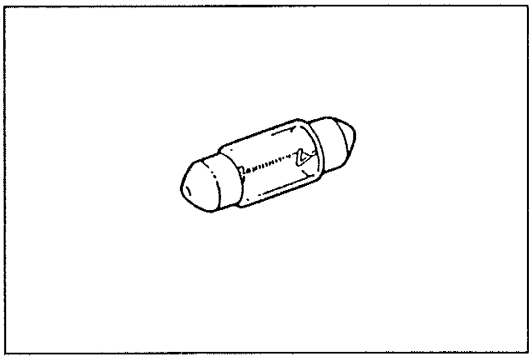

Step 2
Remove and check the interior light bulb.
(Refer to page I2–18.)

Bulb	Action
OK	Go to Step 3
Burnt	Replace interior light bulb (Refer to page I2–18)

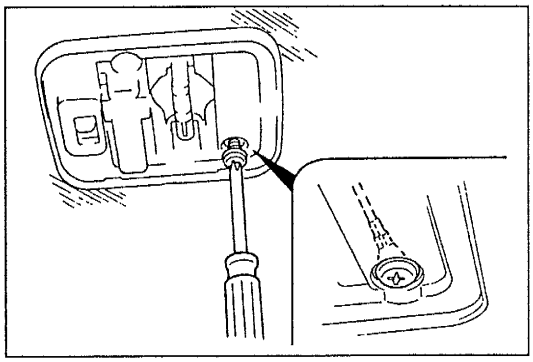

Step 3
Verify that the interior light is properly grounded.

Connection	Action
Good	Go to Step 4
No good	Connect interior light to ground

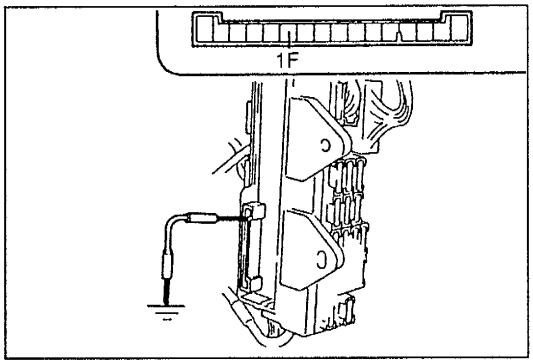

Step 4
1. Remove the CPU from the joint box.
   (Refer to section Z3.)
2. Disconnect the interior light connector.
3. Connect a jumper wire between terminal 1F of the CPU connector on the joint box and ground.

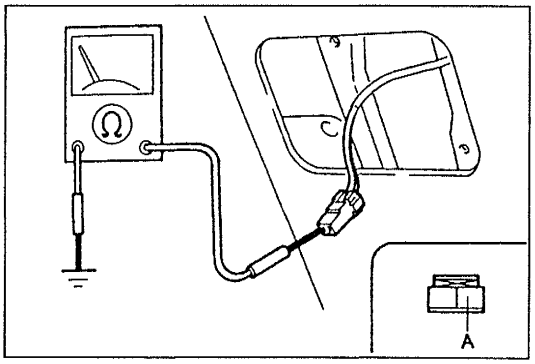

4. Check for continuity between terminal B (R/W) of the interior light connector and ground.

Continuity	Action
Yes	Go to Step 5
No	Repair wiring harness (Interior light—CPU)

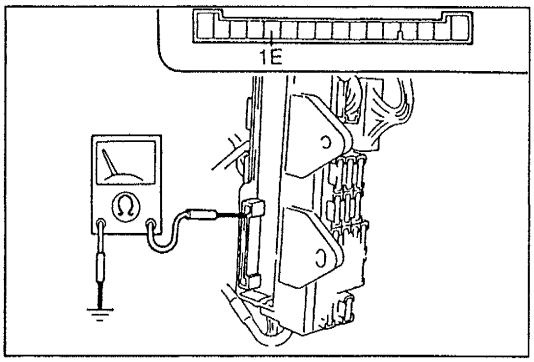

Step 5
1. Open any door.
2. Check for continuity between terminal 1E of the CPU connector on the joint box and ground.

Continuity	Action
Yes	Replace CPU
No	Go to Step 6

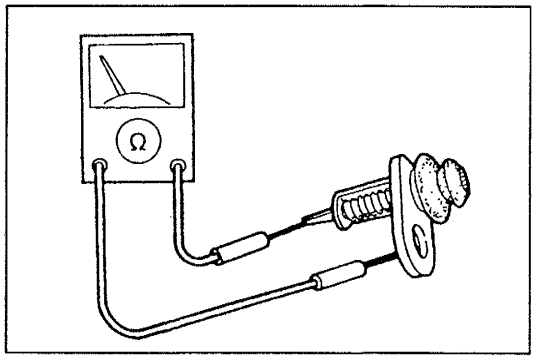

Step 6
1. Remove the door switch.
2. Check for continuity between the terminals of the door switch.

Switch	Continuity
Depressed	No
Released	Yes

3. If correct, repair the wiring harness. (CPU—door switch)
4. If not as specified, replace the door switch.

Flowchart No.2	Symptom	Spot light does not illuminate [626] (Interior light function normally)

Possible cause
- Burnt spot light bulb
- Damaged spot light
- Open or short circuit in wiring harness
- Poor connection of connector

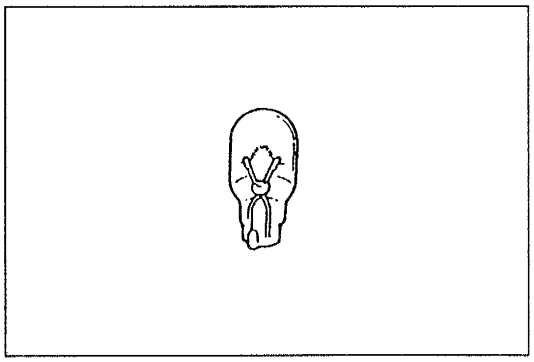

Step 1
Remove and check the spot light bulb.
(Refer to page I2–18.)

Bulb	Action
OK	Go to Step 2
Burnt	Replace spot light bulb (Refer to page I2–18)

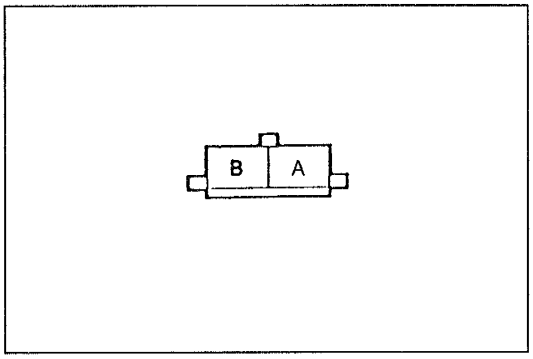

Step 2
Measure the voltage at terminal B (L/R) of the spot light connector.

B+: Battery positive voltage

Voltage	Action
B+	Go to Step 3
Other	Repair wiring harness (ROOM 15 A fuse—Spot light)

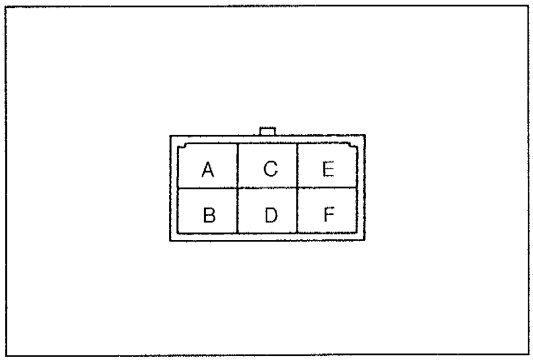

Step 3
1. Disconnect the spot light connector.
2. Check for continuity between terminal F (B) of the spot light connector and ground.

Continuity	Action
Yes	Replace spot light (Refer to page I2–18)
No	Repair wiring harness (Spot light—Ground)

Flowchart No.3	Symptom	Interior light does not illuminate [MX-6] (Spot light function normally)

Possible cause
- Burnt interior light bulb
- Damaged interior and spot light
- Damaged CPU
- Damaged door switch
- Open or short circuit in wiring harness
- Poor connection of connector

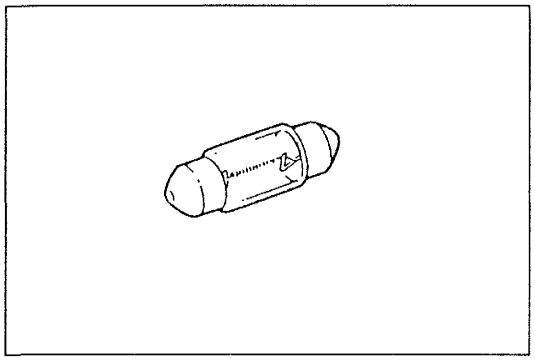

Step 1
Remove and check the interior light bulb.
(Refer to page I2–19.)

Bulb	Action
OK	Go to Step 2
Burnt	Replace interior light bulb (Refer to page I2–19)

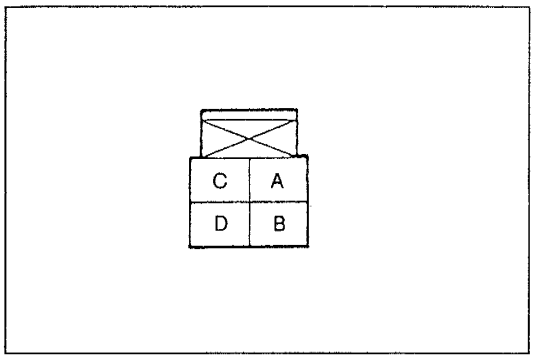

Step 2
1. Remove the interior and spot light.
   (Refer to page I2–19.)
2. Disconnect the interior and spot light connector.
3. Check for continuity between terminal D (B) of the interior and spot light connector and ground.

Continuity	Action
Yes	Go to Step 3
No	Repair wiring harness (Interior and spot light—ground)

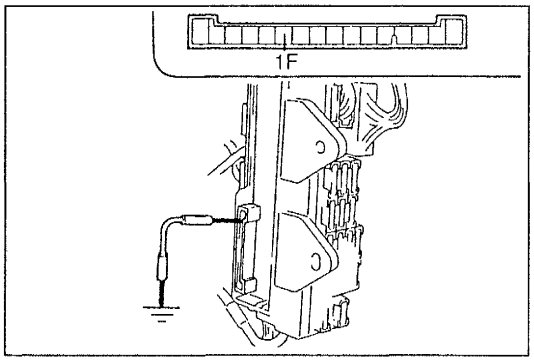

Step 3
1. Remove the CPU from the joint box.
   (Refer to section Z3.)
2. Connect a jumper wire between terminal 1F of the CPU connector on the joint box and ground.

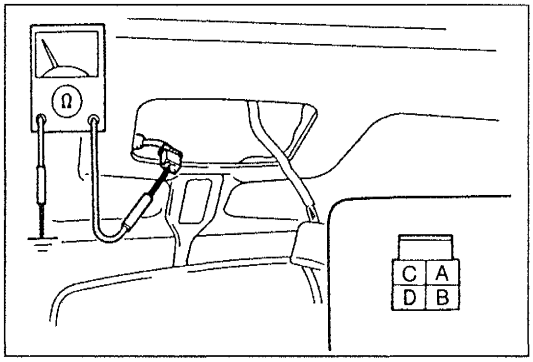

3. Check for continuity between terminal B (G) of the interior and spot light connector and ground.

Continuity	Action
Yes	Go to Step 4
No	Repair wiring harness (Interior and spot light—CPU)

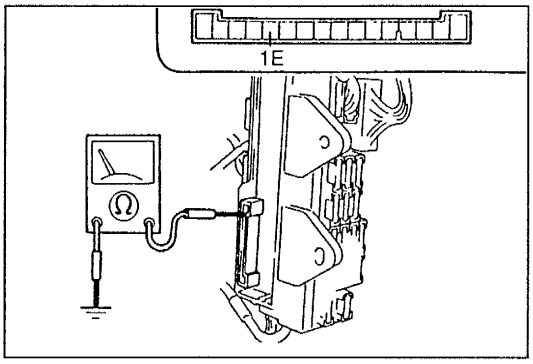

Step 4
1. Open any door.
2. Check for continuity between terminal 1E of the CPU connector on the joint box and ground.

Continuity	Action
Yes	Replace CPU
No	Go to Step 5

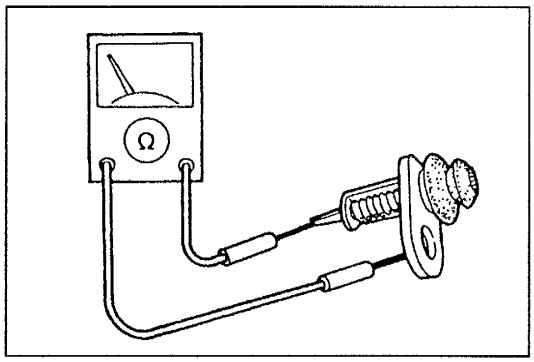

Step 5
1. Remove the door switch.
2. Check for continuity between the terminals of the door switch.

Switch	Continuity
Depressed	No
Released	Yes

3. If correct, repair the wiring harness. (CPU—door switch)
4. If not as specified, replace the door switch.

Flowchart No.4	Symptom	Spot light does not illuminate [MX-6] (Interior light function normally)

Possible cause
- Burnt spot light bulb
- Damaged interior and spot light
- Poor connection of connector

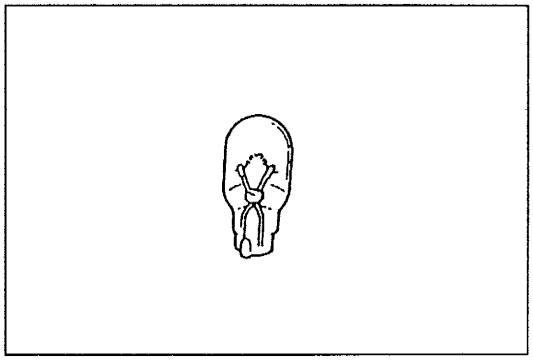

Remedy
Remove and check the spot light bulb.
(Refer to page I2–19.)

Bulb	Action
OK	Replace interior and spot light (Refer to page I2–19)
Burnt	Replace spot light bulb (Refer to page I2–19)

Flowchart No.5	Symptom	Interior light illuminates but courtesy lights do not illuminate

Possible cause
- Burnt courtesy light bulb
- Open or short circuit in wiring harness
- Poor connection of connector

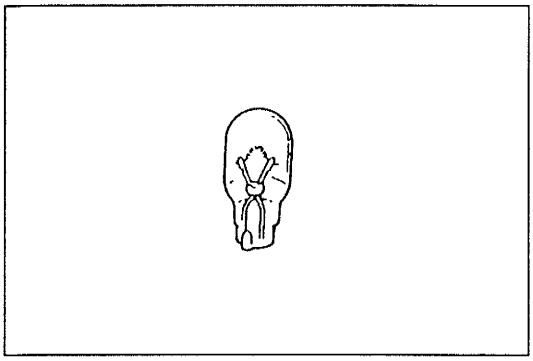

Step 1
Remove and check the courtesy light bulbs.
(Refer to page I2–20.)

Bulb	Action
OK	Go to Step 2
Burnt	Replace courtesy light bulb (Refer to page I2–20)

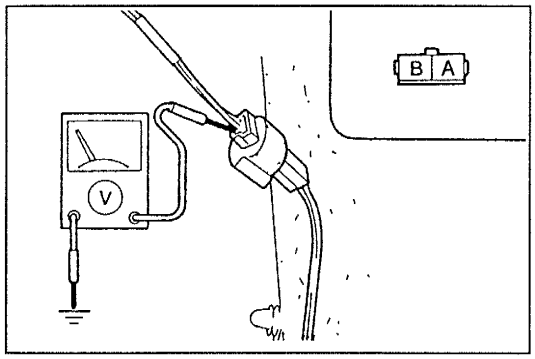

Step 2
1. Remove the door trim.
   (Refer to the 1996 626/MX-6 Workshop Manual, section S.)
2. Measure the voltage at terminal B (L/R) of the courtesy light connector.

B+: Battery positive voltage

Voltage	Action
B+	Go to Step 3
Other	Repair wiring harness (ROOM 15 A fuse—Courtesy light)

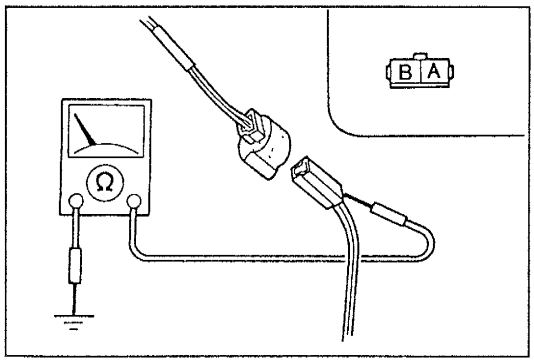

Step 3
1. Open any door.
2. Disconnect the courtesy light connector.
3. Check for continuity between terminal A (R/W) of the courtesy light connector and ground.

Continuity	Action
Yes	Replace courtesy light
No	Repair wiring harness (Courtesy light—Door switch)

Flowchart No.6	Symptom	Interior light and courtesy lights stay on with all doors closed

Possible cause
- Damaged door switch
- Damaged CPU

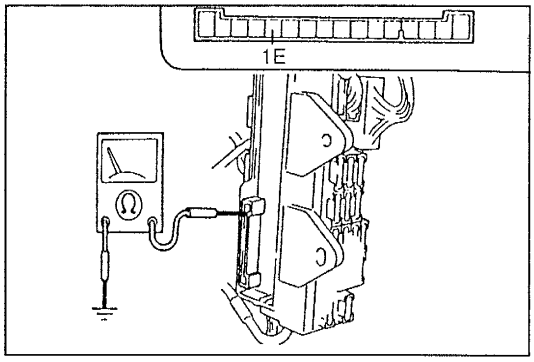

Step 1
1. Open any door.
2. Remove the CPU from the joint box. (Refer to section Z3.)
3. Check for continuity between terminal 1E of the CPU connector on the joint box and ground.

Continuity	Action
Yes	Replace the CPU
No	Go to Step 2

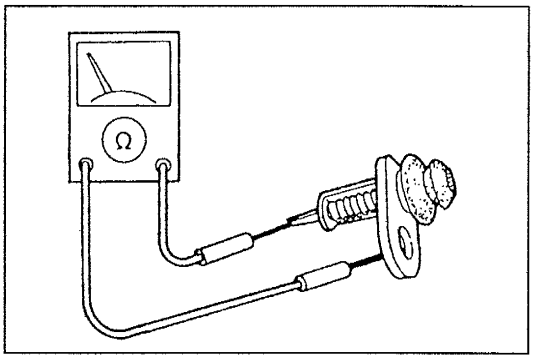

Step 2
1. Remove the door switch.
2. Check for continuity between terminal of the door switch and switch body.

Switch	Continuity
Depressed	No
Released	Yes

3. If correct, repair the wiring harness. (CPU—door switch)
4. If not as specified, replace the door switch.

Flowchart No.7	Symptom	Vanity mirror illumination does not turn on

Possible cause
- Damaged vanity mirror illumination
- Open or short circuit in wiring harness
- Poor connection of connector.

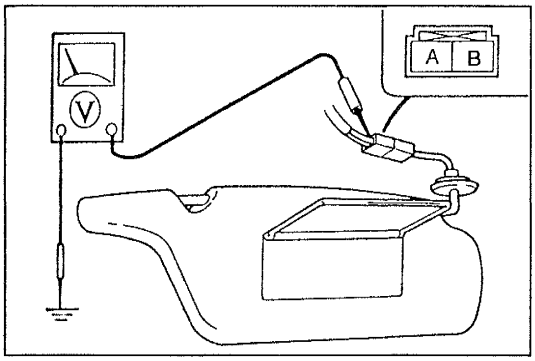

Step 1
1. Remove the sunvisor.
   (Refer to the 1996 626/MX-6 Workshop Manual, section S.)
2. Measure the voltage at terminal A (L/R) of the vanity mirror illumination connector.

B+: Battery positive voltage

Voltage	Action
B+	Go to Step 2
Other	Repair wiring harness (ROOM 15 A fuse—Vanity mirror illumination)

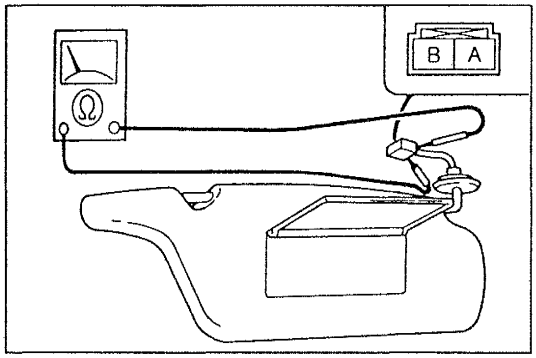

Step 2
1. Disconnect the vanity mirror illumination connector.
2. Check for continuity between terminals A and B of the vanity mirror illumination switch with the vanity mirror cover open.

Continuity	Action
Yes	Repair wiring harness (Vanity mirror illumination—Ground)
No	Replace sunvisor (Refer to 1996 626/MX-6 Workshop Manual section S)

INTERIOR LIGHT

Removal / Installation

(626) [Without sunroof]

1. Remove in the order shown in the figure.
2. Install in the reverse order of removal.

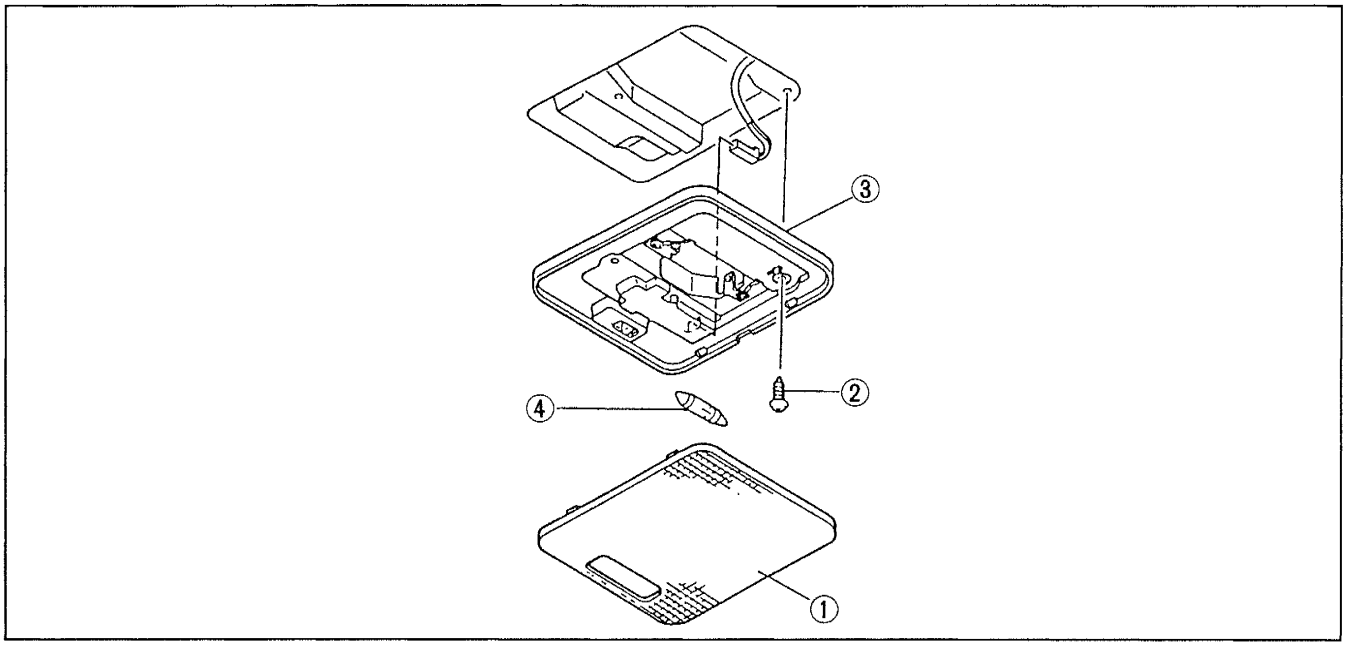

1. Lens
2. Screw
3. Housing
4. Bulb **(10W)**

SPOT LIGHT

Removal / Installation

(626) [With sunroof]

1. Remove in the order shown in the figure.
2. Install in the reverse order of removal.

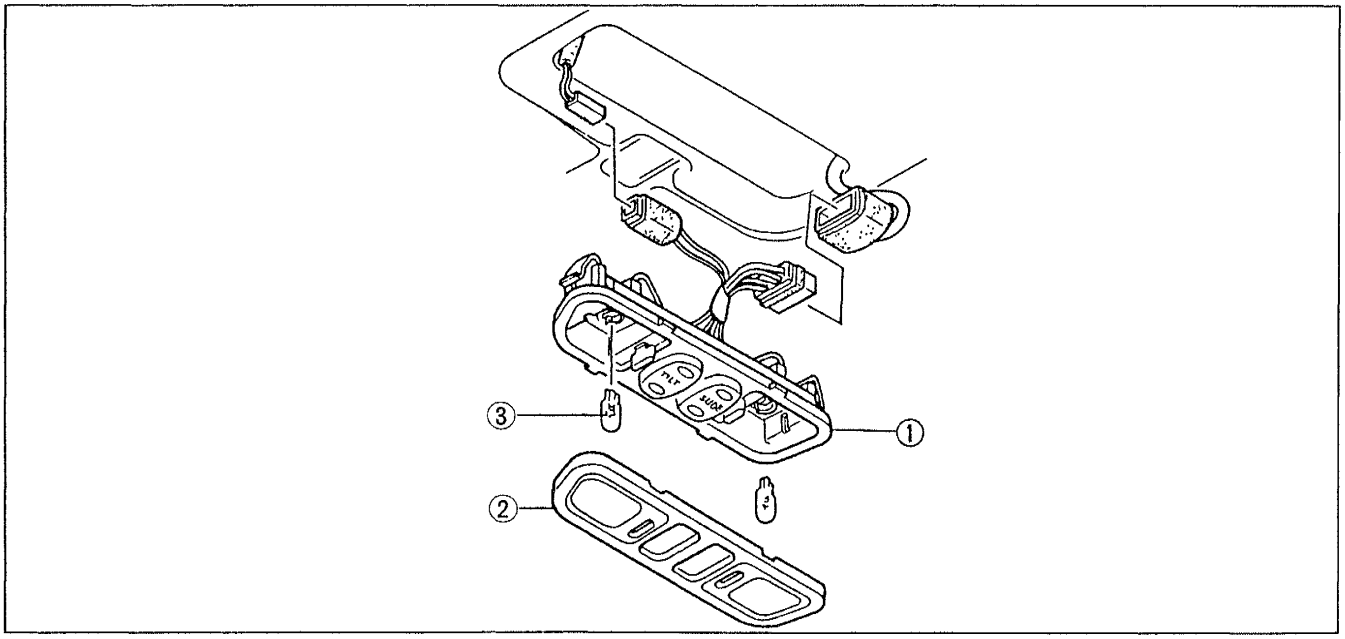

1. Housing
2. Lens
3. Bulb **(5W)**

INTERIOR AND SPOT LIGHT

Removal / Installation

(MX-6) [Without sunroof]

1. Remove in the order shown in the figure.
2. Install in the reverse order of removal.

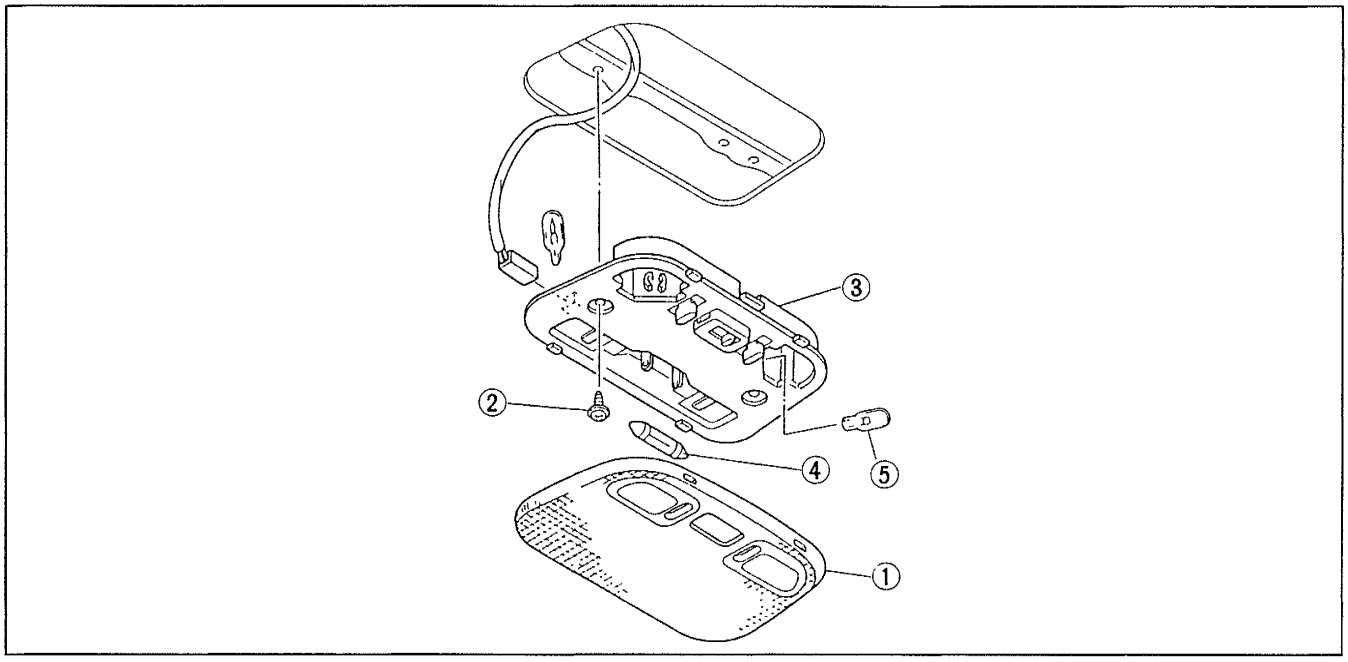

1. Lens
2. Screw
3. Housing
4. Bulb **(10W)**
5. Bulb **(5W)**

(MX-6) [With sunroof]

1. Remove in the order shown in the figure.
2. Install in the reverse order of removal.

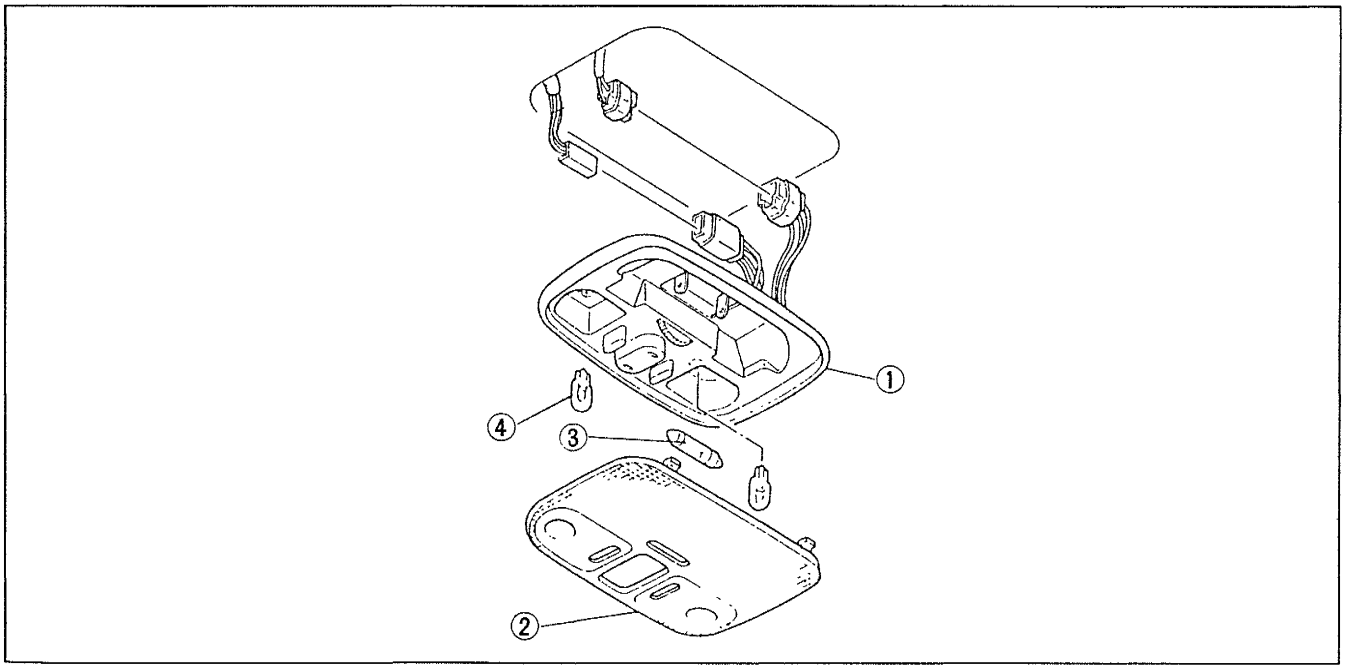

1. Housing
2. Lens
3. Bulb **(10W)**
4. Bulb **(5W)**

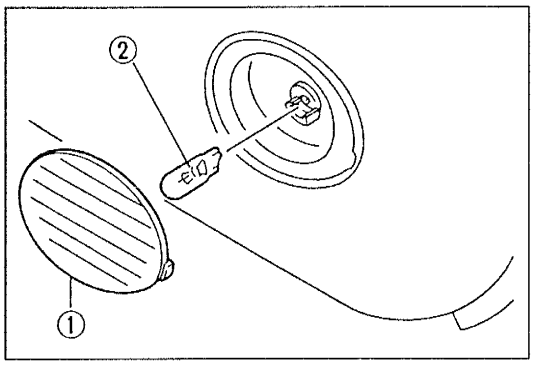

COURTESY LIGHT

Bulb Replacement

1. Remove the lens.
2. Remove the bulb.
3. Install in the reverse order of removal.

Bulb: 3.4W

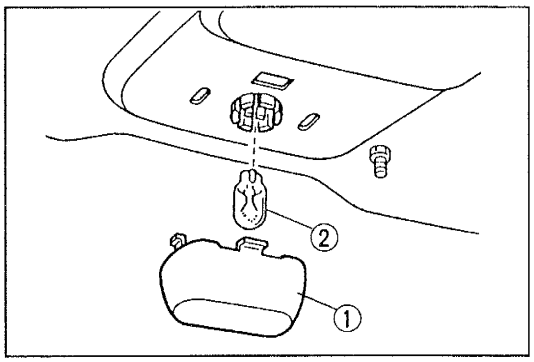

TRUNK COMPARTMENT LIGHT

Removal / Installation

1. Remove the lens.
2. Remove the bulb.
3. Install in the reverse order of removal.

Bulb: 5W

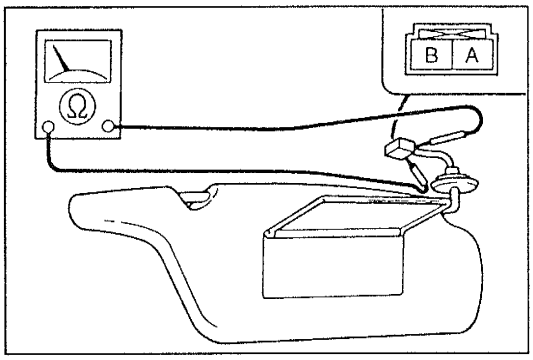

VANITY MIRROR ILLUMINATION

Inspection

1. Remove the sunvisor.
   (Refer to the 1996 626/MX-6 Workshop Manual, section S.)
2. Disconnect the vanity mirror illumination connector.
3. Check for continuity between terminals A and B of the vanity mirror illumination switch.

Vanity mirror cover	Continuity
Open (switch on)	Yes
Close (switch off)	No

4. If not as specified, replace the sunvisor.
   (Refer to the 1996 626/MX-6 Workshop Manual, section S.)

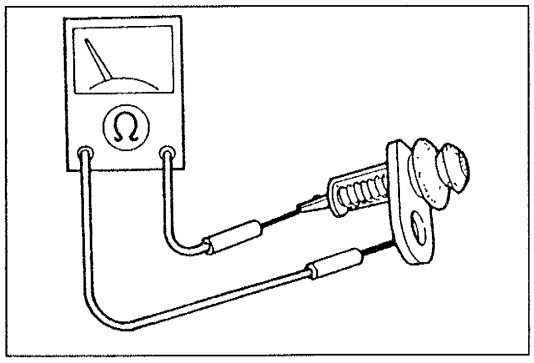

DOOR SWITCH

Inspection

1. Remove the door switch.
2. Check for continuity between the terminals of the door switch.

Door switch	Continuity
Pressed	No
Released	Yes

3. If not as specified, replace the door switch.

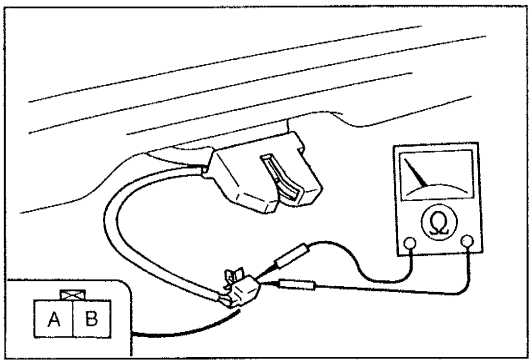

TRUNK COMPARTMENT LIGHT SWITCH

Inspection

1. Remove the trunk compartment light switch.
   (Refer to the 1996 626/MX-6 Workshop Manual, section S.)
2. Disconnect the trunk compartment light switch connector.
3. Check for continuity between the terminals of the trunk compartment light switch.

Switch	Continuity
Pressed (Trunk lid closed)	No
Released (Trunk lid open)	Yes

4. If not as specified, replace the trunk lid lock.
   (Refer to the 1996 626/MX-6 Workshop Manual, section S.)

Before beginning any service procedure, refer to section S of this manual for air bag system service warnings.

AUDIO

AUDIO

PREPARATION
SST

49 UN01 050 Radio removing tool	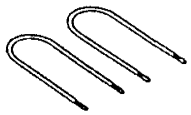	For removal of audio unit

STRUCTURAL VIEW

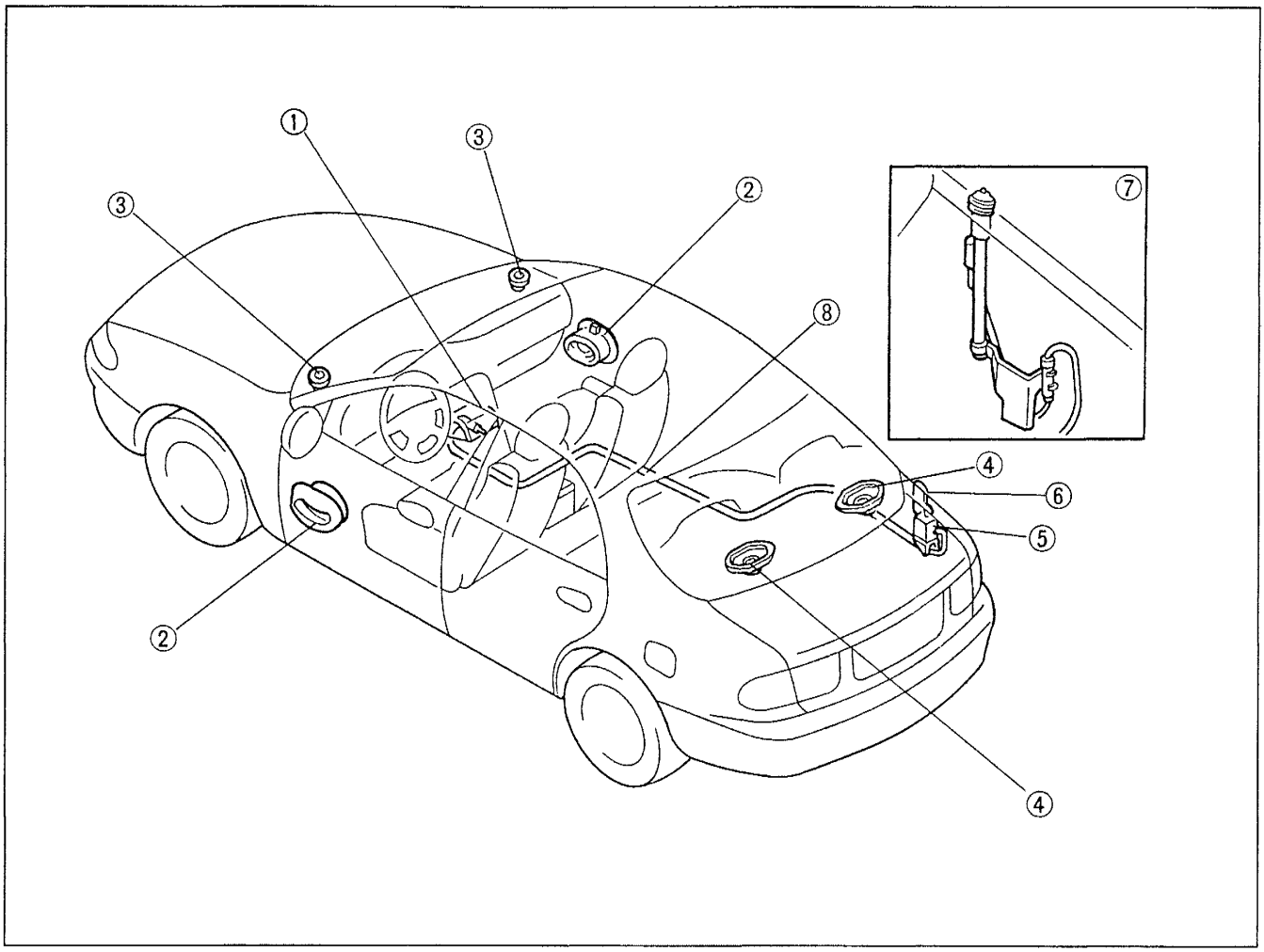

SYSTEM DIAGRAM

AUDIO UNIT (AM-FM TUNER/CASSETTE TAPE PLAYER)
626

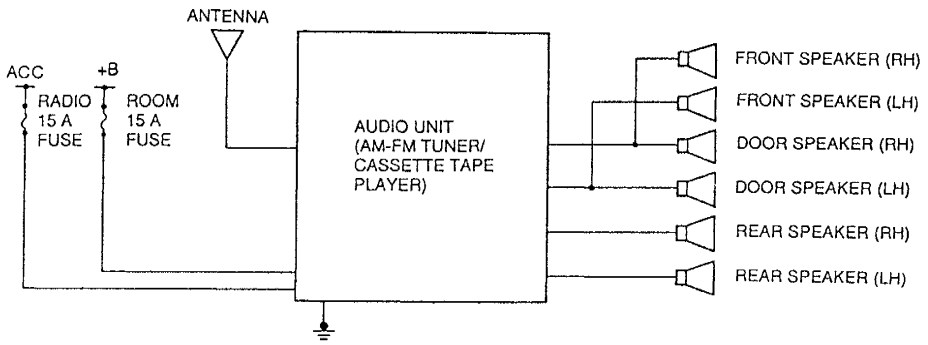

626/MX-6

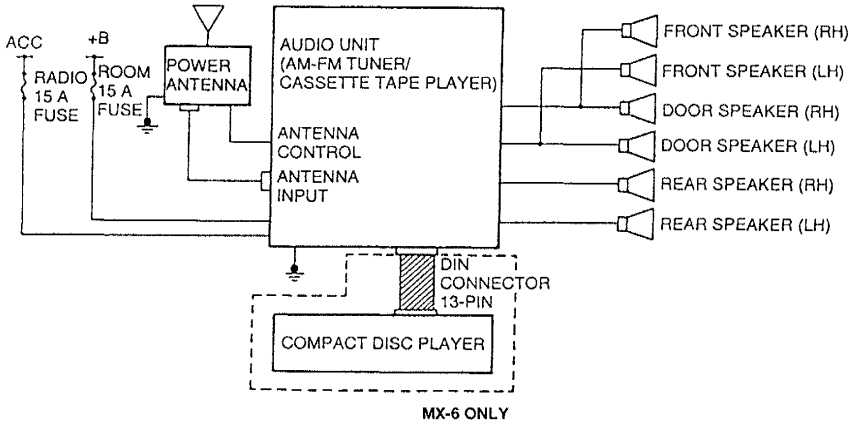

POWER ANTENNA

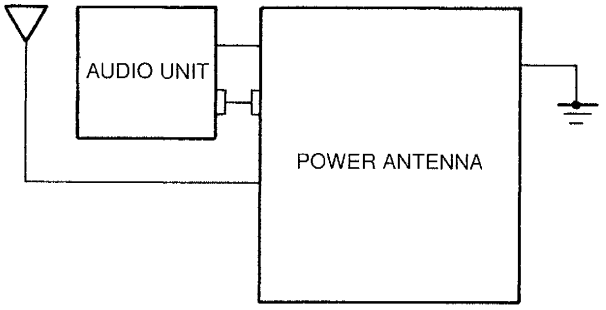

Audio Unit

- The ROOM 15 A fuse supplies voltage at all times to the audio unit memory circuits.
- The antenna control terminal turns on the power antenna when the radio is on.
- The audio unit supplies power and ground to the compact disc player through the DIN connector harness. The player sends audio signals to the audio unit through the DIN harness. (MX-6 only)

Power Antenna

The power antenna relay contains a transistor which is controlled by the audio unit. When the radio is turned on, the relay coil is grounded by the transistor. The relay energizes to apply power and ground to the antenna motor. The antenna motor runs until the limit switches change positions.

OUTLINE OF AUDIO
Audio Unit
AM-FM tuner/cassette tape palyer
626

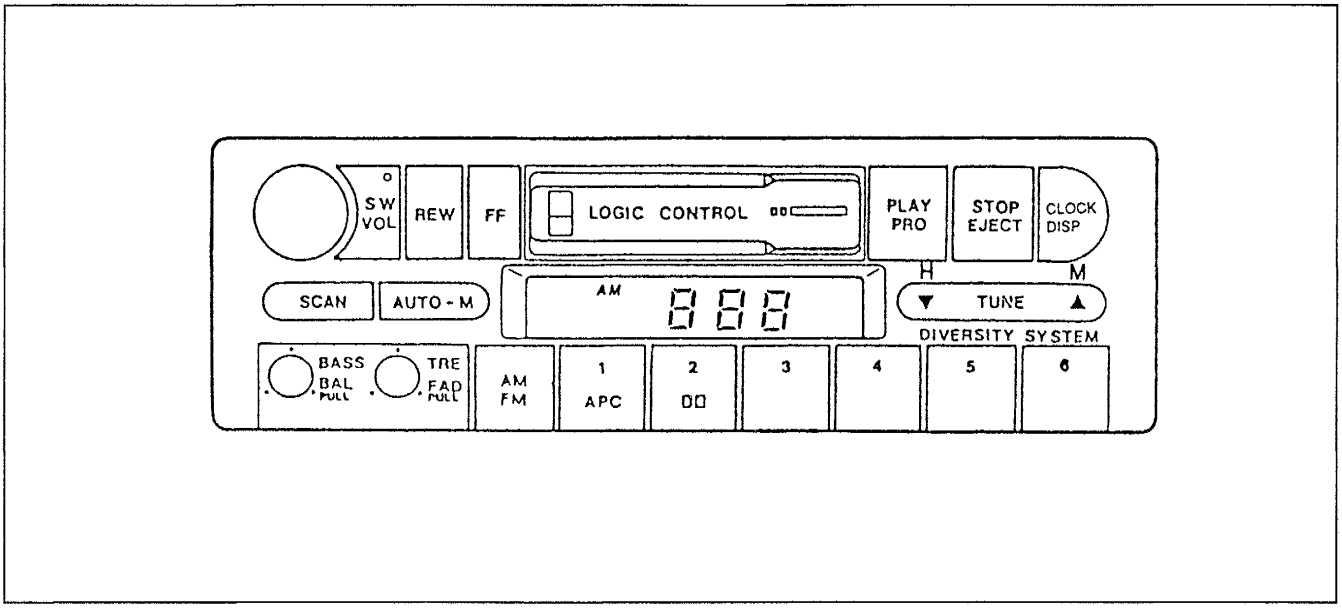

12-pin connector

B+: Battery positive voltage

1A	ACC
1B	
1C	Backup power (B+)
1D	Antenna SW
1E	TNS
1F	Illumination ⊖
1H	
1J	Amp control
1K	Front speaker (LH) ⊕
1L	Front speaker (LH) ⊖
1M	Front speaker (RH) ⊕
1N	Front speaker (RH) ⊖

8-pin connector

2A	Rear speaker (LH) ⊕
2B	Rear speaker (LH) ⊖
2C	
2D	
2F	Rear speaker (RH) ⊕
2H	Rear speaker (RH) ⊖
2I	System mute
2J	

DIN connector 13-pin

B+: Battery positive voltage

1	Output LH ⊕
2	Input LH ⊕
3	Output RH ⊕
4	Input RH ⊕
5	Signal ground
6	TNS
7	ACC
8	Backup power (B+)
9	System ON
10	Illumination ⊖
11	System OFF
12	Control play
13	Mute (input)
E	Shield ground

1-pin connector

3A	Ground

Specification

Rated voltage	12V
Frequency band	AM 530—1,710 kHz FM 87.75—107.9 MHz
Maximum amplifier output power	25W × 4

MX-6

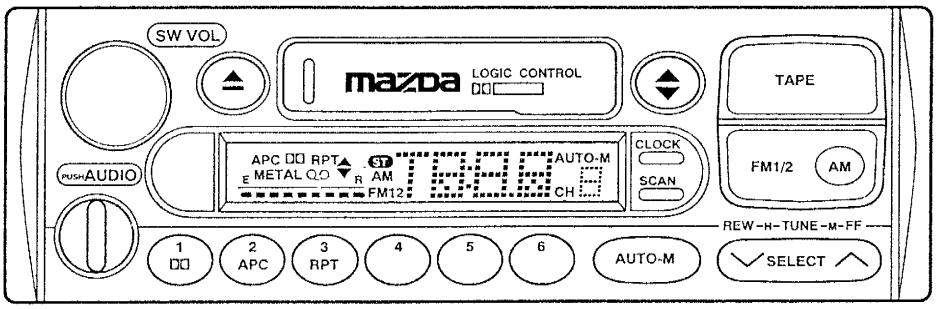

B+: Battery positive voltage

12-pin connector

1A	ACC
1B	
1C	Backup power (B+)
1D	Antenna SW
1E	TNS
1F	Illumination ⊖
1H	
1J	Amp control
1K	Front speaker (LH) ⊕
1L	Front speaker (LH) ⊖
1M	Front speaker (RH) ⊕
1N	Front speaker (RH) ⊖

8-pin connector

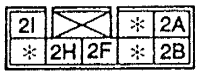

2A	Rear speaker (LH) ⊕
2B	Rear speaker (LH) ⊖
2C	
2D	
2F	Rear speaker (RH) ⊕
2H	Rear speaker (RH) ⊖
2I	System mute
2J	

B+: Battery positive voltage

DIN connector 13-pin

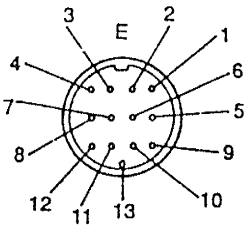

1	Output LH ⊕
2	Input LH ⊕
3	Output RH ⊕
4	Input RH ⊕
5	Signal ground
6	TNS
7	ACC
8	Backup power (B+)
9	System ON
10	Illumination ⊖
11	System OFF
12	Control play
13	Mute (input)
E	Shield ground

1-pin connector

3A	Ground

Specification

Rated voltage	12V
Frequency band	AM 530—1,710 kHz FM 87.75—107.9 MHz
Maximum amplifier output power	25W × 4

Compact Disc (CD) Player
MX-6

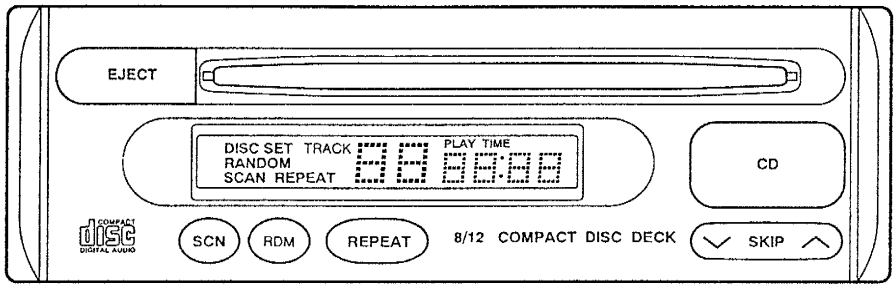

DIN connector
13-pin

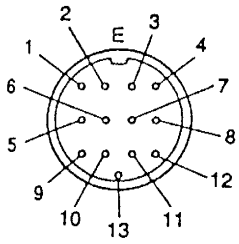

B+: Battery positive voltage

1	Input LH ⊕
2	Output LH ⊕
3	Input RH ⊕
4	Output RH ⊕
5	Signal ground
6	Illumination ⊕ (display)
7	ACC
8	Backup power (B+)
9	System OFF
10	Illumination ⊕ (graphic)
11	System ON
12	System control
13	Mute (output)
E	Shield ground

Specification

Rated voltage	12V
CD type	8 cm single size / 12 cm regular size (CD)

J-1 ■ AUDIO SYSTEM

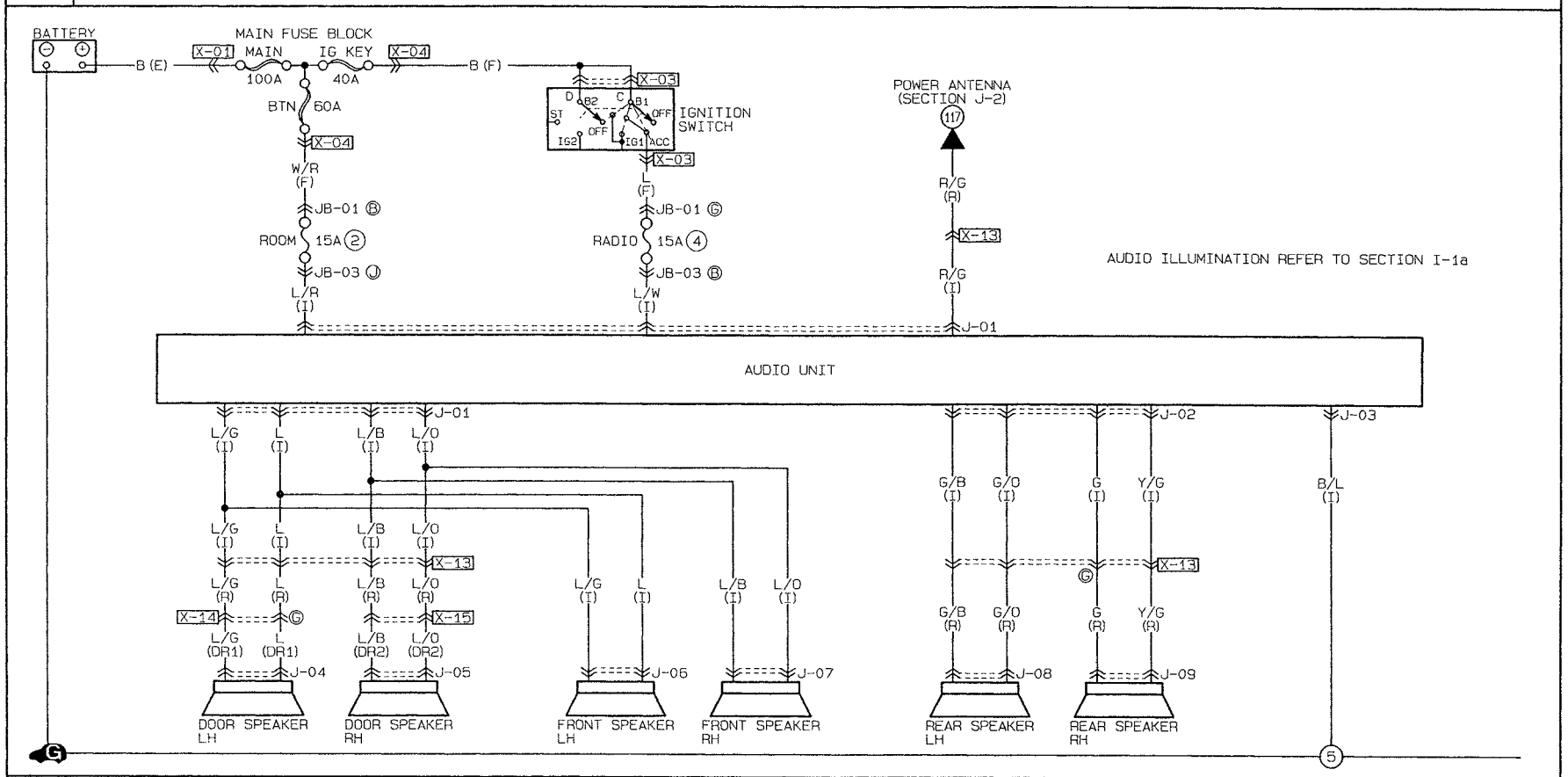

J-01 AUDIO UNIT (I)	J-02 AUDIO UNIT (I)	J-03 AUDIO UNIT (I)	J-04 DOOR SPEAKER LH (DR1)
L/B, L/G, O, L/R, L/W L/O, L, *, *, BR, R/G, *	*, G/B *, Y/G, G, *, G/O	B/L	626: L, L/G MX-6: L/G, L

J-05 DOOR SPEAKER RH (DR2)	J-06 FRONT SPEAKER LH (I)	J-07 FRONT SPEAKER RH (I)	J-08 REAR SPEAKER LH (R)	J-09 REAR SPEAKER RH (R)
626: L/O, L/B MX-6: L/B, L/O	L, L/G, *	L/O, L/B, *	G/O, G/B	Y/G, G

J-1

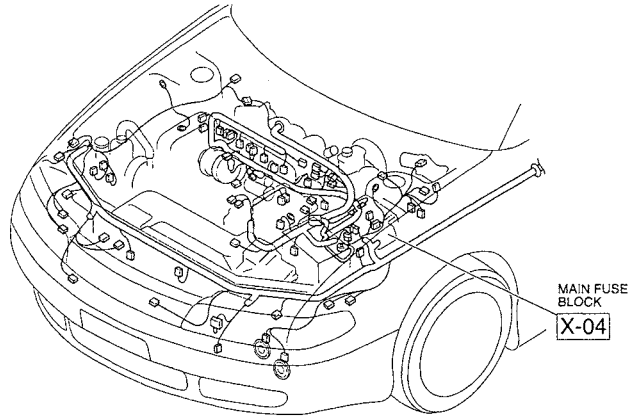
MAIN FUSE BLOCK
X-04

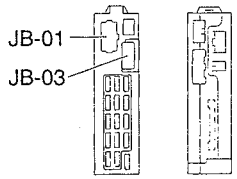
JOINT BOX
JB-01
JB-03

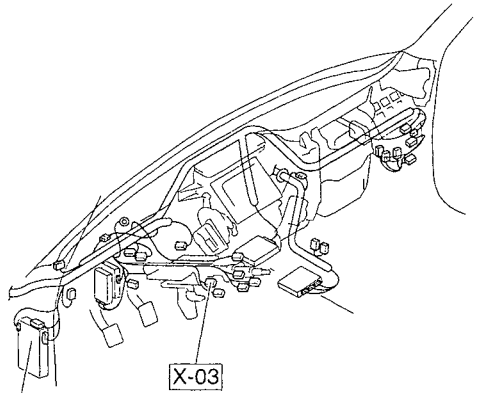
X-03
IGNITION SWITCH (BLACK)
JOINT BOX

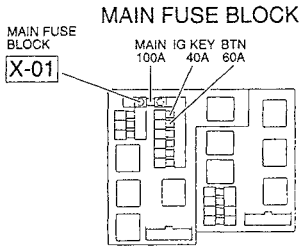
MAIN FUSE BLOCK
MAIN FUSE BLOCK
X-01
MAIN 100A
IG KEY 40A
BTN 60A

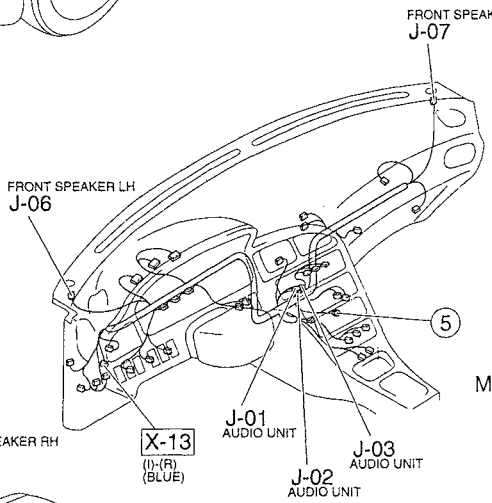
FRONT SPEAKER RH
J-07
FRONT SPEAKER LH
J-06
5
X-13
(I)-(R)
(BLUE)
J-01
AUDIO UNIT
J-02
AUDIO UNIT
J-03
AUDIO UNIT
MX-6

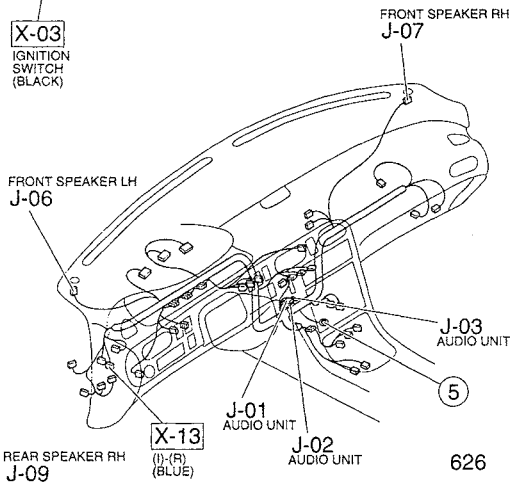
FRONT SPEAKER RH
J-07
FRONT SPEAKER LH
J-06
J-03
AUDIO UNIT
5
X-13
(I)-(R)
(BLUE)
J-01
AUDIO UNIT
J-02
AUDIO UNIT
626

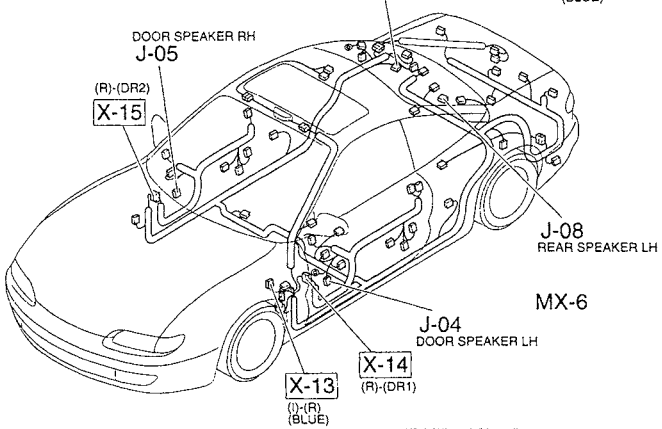
REAR SPEAKER RH
J-09
DOOR SPEAKER RH
J-05
(R)-(DR2)
X-15
J-08
REAR SPEAKER LH
MX-6
J-04
DOOR SPEAKER LH
X-14
(R)-(DR1)
X-13
(I)-(R)
(BLUE)

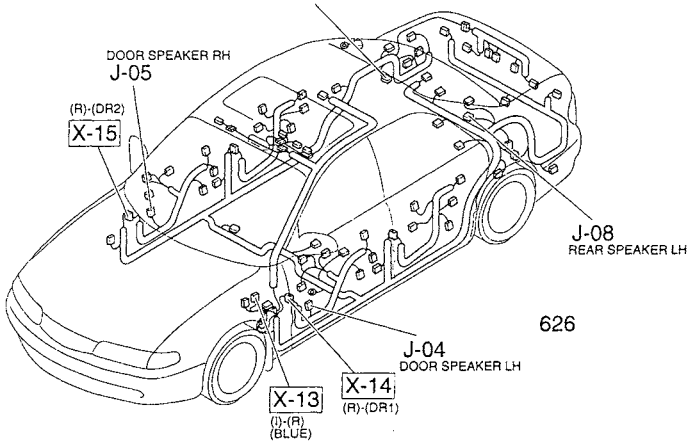
REAR SPEAKER RH
J-09
DOOR SPEAKER RH
J-05
(R)-(DR2)
X-15
J-08
REAR SPEAKER LH
626
J-04
DOOR SPEAKER LH
X-14
(R)-(DR1)
X-13
(I)-(R)
(BLUE)

Before Troubleshooting

Problems with the audio system can be caused by factors such as wrong operation and outside noises. Eliminate these causes before troubleshooting.

Symptom	Sound Source	
	Tuner	Other
• No speakers operate	(1) Is VOLUME at minimum?	(1) Is cassette tape paused? (2) Is compact disc paused? (MX-6 only)
• Some speakers operate	(1) Are FADER and BALANCE adjusted correctly?	(1) Is speaker damaged?
• Sound warped	(1) Is TUNER adjusted correctly? (2) Is symptom caused by multipath interference?	(1) Is VOLUME too loud? (2) Are windows vibrating? (3) Is cassette tape good? (4) Is compact disc good? (MX-6 only)
• Sound quality poor or not in stereo	(1) Is TUNER adjusted correctly? (2) Is BASS-TREBLE adjusted correctly?	(1) Is speaker damaged?

Causes of noise

(1) Defective audio system or improper installation
(2) Noise from multipath or neon signs (ambient noise)
(3) Vehicle-induced noise

Because ambient noise is only a temporary occurrence, this section deals only with vehicle-induced noises.

Noise source	Symptom
Fuel pump	Occurs as soon as ignition switch is turned on
Washer motor	Occurs when washer is operating
Wiper motor	Whining noise when wipers are operating
Power window	Occurs when power window is operating
Brake switch	Occurs when brake pedal is depressed
Turn signal	Clicking noise when turn signals are flashing
Alternator	Whining noise when accelerating
Ignition	Occurs when starting engine
Air conditioner	Occurs when air conditioner is operating

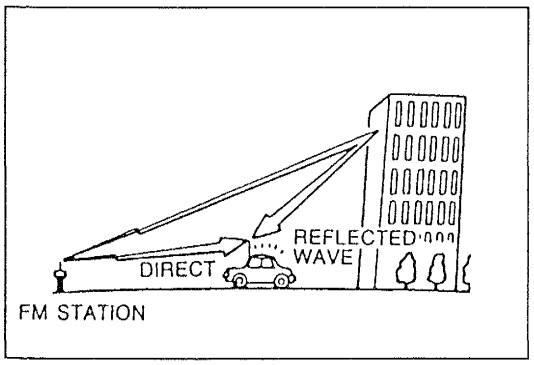

FM multipath

FM waves can cause a problem called multipath receiving. This happens when the radio picks up a direct wave and a reflected wave at the same time, which results in a "Dead Spot" or distorted sound.

Symptom	No speakers operate

Possible cause
- Burnt ROOM 15A or RADIO 15A fuse
- Damaged audio unit
- Open or short circuit in wiring harness
- Poor connection of connector

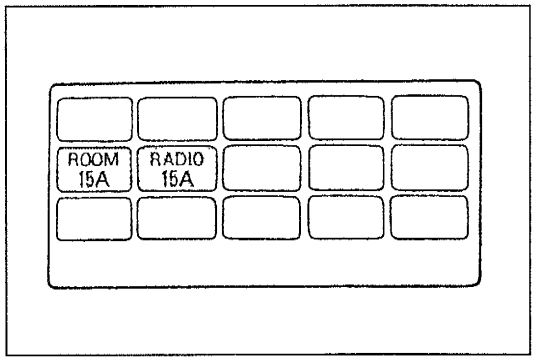

Step 1
Check the ROOM 15A and RADIO 15A fuses in the fuse block.

Fuse	Action
OK	Go to Step 2
Burnt	Replace fuse after checking and repairing wiring harness

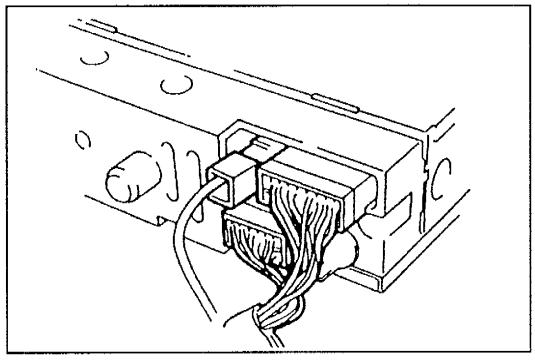

Step 2
1. Remove the audio unit.
   (Refer to page J–27.)
2. Verify that the audio unit connectors are properly connected. Reconnect them if necessary.
3. If the connections are OK, go to Step 3.

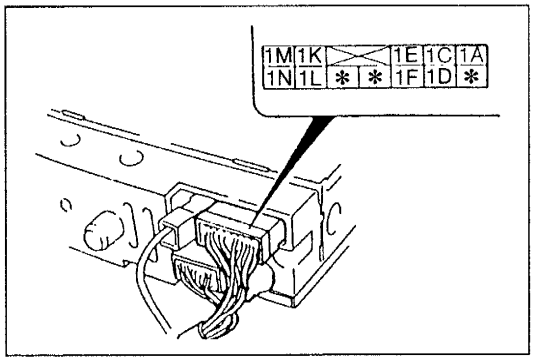

Step 3
1. Turn the ignition switch to ACC.
2. Measure the voltage at terminals 1A (L/W) and 1C (L/R) of the audio unit connector.

B+: Battery positive voltage

Terminal	Voltage	Action
1A	B+	Measure voltage at terminal 1C
	Other	Repair wiring harness (RADIO 15 A fuse—Audio unit)
1C	B+	Go to Step 4
	Other	Repair wiring harness (ROOM 15 A fuse—Audio unit)

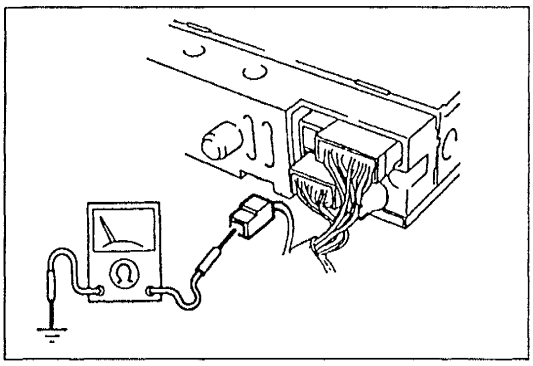

Step 4
1. Disconnect the audio unit connector.
2. Check for continuity between terminal 3A (B/L) of the audio unit connector and ground.

Continuity	Action
Yes	Replace audio unit (Refer to page J–27)
No	Repair wiring harness (Audio unit—GND)

Symptom	Some speakers do not operate

Possible cause
- Damaged speaker
- Damaged audio unit
- Open or short circuit in wiring harness
- Poor connection of connector

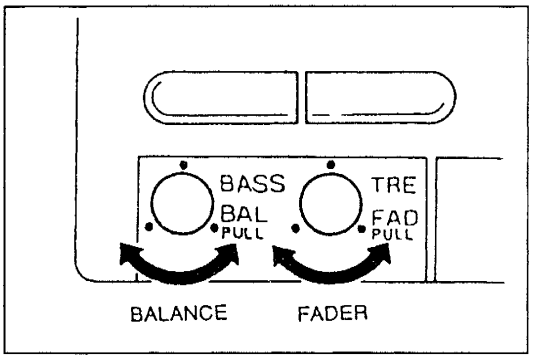

Step 1
1. Turn the ignition switch to ACC.
2. Turn the audio system power on.
3. Play a recorded cassette tape and set the volume control knob to an appropriate position.
4. Turn the bass/balance control knob and the treble/fader control knob as indicated below and check the performance of each speaker.

Speaker	Fader	Balance	Speaker operates	Judgement	Next step
Right front	Front	Right	Yes	Right front speaker circuit OK	—
			No	Right front speaker circuit malfunction	Step 2
Left front		Left	Yes	Left front speaker circuit OK	—
			No	Left front speaker circuit malfunction	Step 2
Right door		Right	Yes	Right door speaker circuit OK	—
			No	Right door speaker circuit malfunction	Step 2
Left door		Left	Yes	Left door speaker circuit OK	—
			No	Left door speaker circuit malfunction	Step 2
Right rear	Rear	Right	Yes	Right rear speaker circuit OK	—
			No	Right rear speaker circuit malfunction	Step 2
Left rear		Left	Yes	Left rear speaker circuit OK	—
			No	Left rear speaker circuit malfunction	Step 2

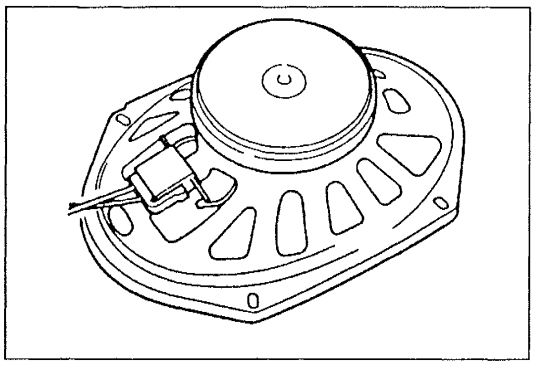

Step 2

1. Remove the malfunctioning speaker.
   - Front speaker
     (Refer to page J–28)
   - Door speaker
     (Refer to page J–27)
   - Rear speaker
     (Refer to page J–28)
2. Verify that the speaker connector is properly connected. If necessary, repair or reconnect the connector.
3. If the speaker still does not work properly, go to Step 3.

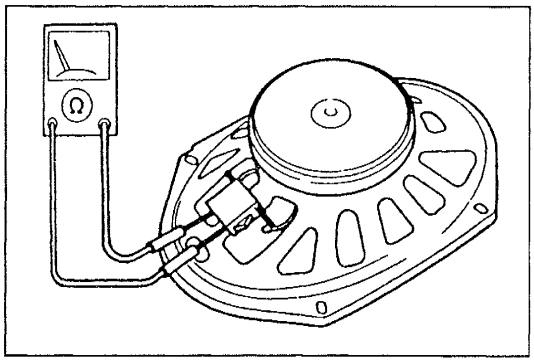

Step 3

1. Disconnect the connector from the malfunctioning speaker.
2. Measure the resistance between the speaker terminals.

Resistance	Action
4 Ω	Go to Step 4
Other	Replace speaker (Refer to page J–27, 28)

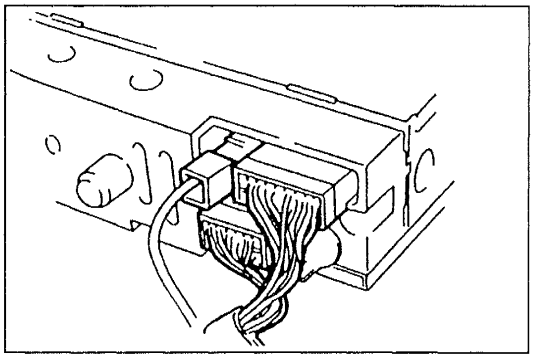

Step 4

1. Remove the audio unit.
   (Refer to page J–27.)
2. Verify that the audio unit connectors are properly connected. Reconnect them if necessary.
3. If the connections are OK, go to Step 5.

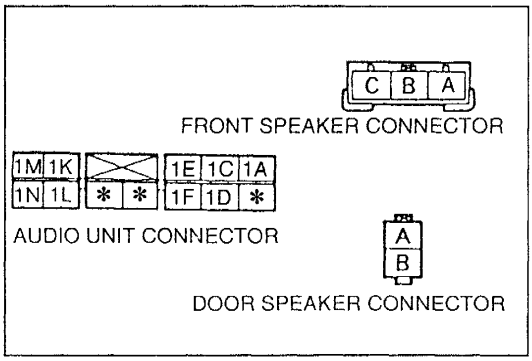

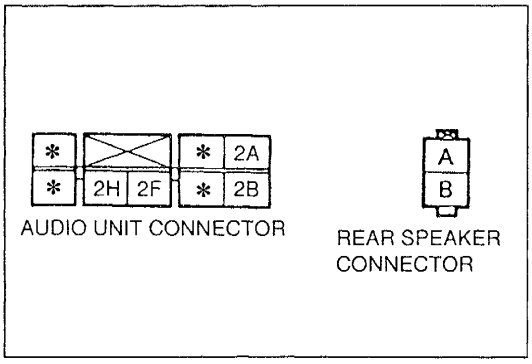

Step 5

1. Check for continuity between the terminals of the audio unit connector and the malfunctioning speaker connector.

Speaker	Audio unit connector	Speaker connector	Continuity
Right front	1M	B	Yes
	1N	C	Yes
Left front	1K	B	Yes
	1L	C	Yes
Right door	1M	B	Yes
	1N	A	Yes
Left door	1K	B	Yes
	1L	A	Yes
Right rear	2F	B	Yes
	2H	A	Yes
Left rear	2A	B	Yes
	2B	A	Yes

2. If correct, replace the audio unit.
   (Refer to page J–27.)
3. If not as specified, repair the wiring harness (audio unit—speaker).

Symptom	Poor sound quality only when radio is played

Possible cause
- Damaged antenna
- Damaged audio unit
- Damaged antenna feeder
- Open or short circuit in wiring harness
- Poor connection of connector

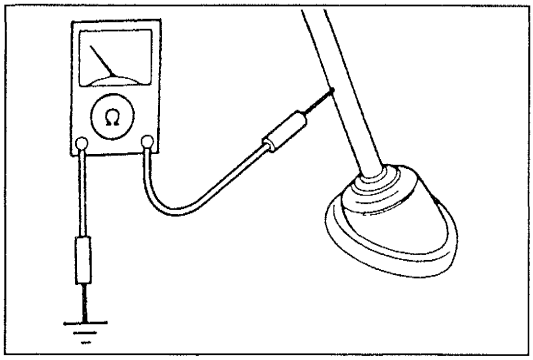

Step 1
Check for continuity between the antenna mast and ground.

Continuity	Action
Yes	Replace antenna mast (Refer to page J–31)
No	Go to Step 2

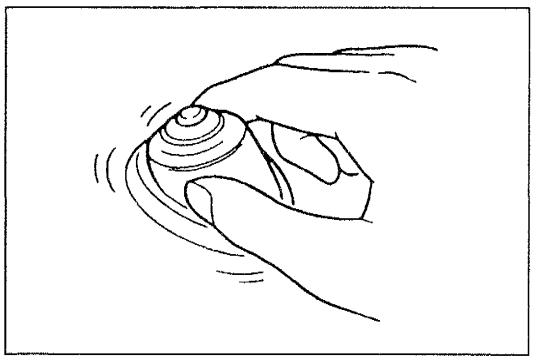

Step 2
Check the mounting nut for proper installation.

Installation	Action
OK	Go to Step 3
Loose	Reinstall mounting nut **Tightening torque:** **2.5—2.9 N·m {25—30 kgf·cm, 22—26 in·lbf}**

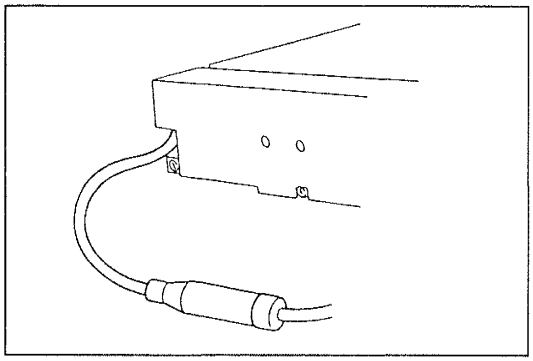

Step 3
1. Remove the audio unit. (Refer to page J–27.)
2. Check the antenna jack for proper connection.

Connection	Action
OK	Go to Step 4
Loose	Reconnect antenna feeder

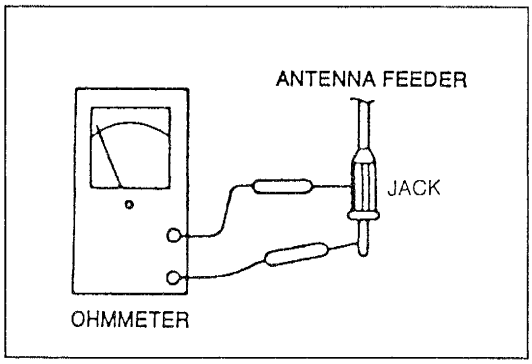

Step 4
1. Disconnect the antenna jack.
2. Check for continuity between the terminals on the outer surface and at the center of the antenna jack.

Continuity	Action
No	Replace audio unit (Refer to page J–27)
Yes	Replace antenna feeder

Symptom	Poor sound quality only when cassette tape is played

Possible cause
- Damaged cassette tape
- Damaged audio unit
- Dirty heads and pinchroller

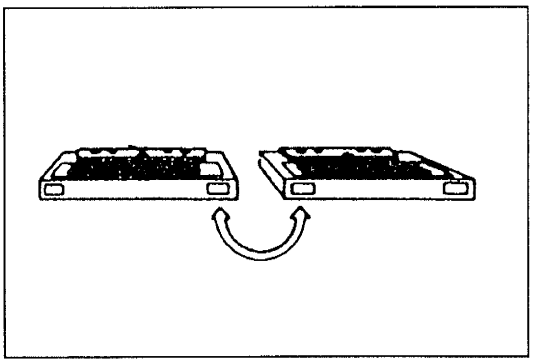

Step 1
Play a known good cassette tape and check the sound quality.

Sound quality	Action
Normal	None (Previous tape defective)
Poor	Go to Step 2

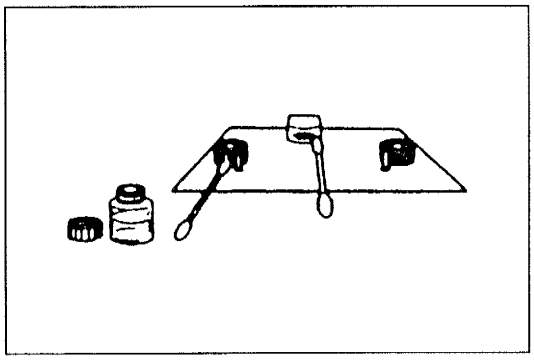

Step 2
1. Clean the heads and pinchroller by using a cassette tape player cleaning kit.
2. Play the cassette tape and check the sound quality.
3. If sound quality is still poor, replace the audio unit. (Refer to page J–27.)

Symptom	Poor sound quality only when compact disc is played

Possible cause
- Damaged compact disc
- Damaged audio unit
- Damaged DIN cord
- Damaged CD player
- Open or short circuit in DIN cord

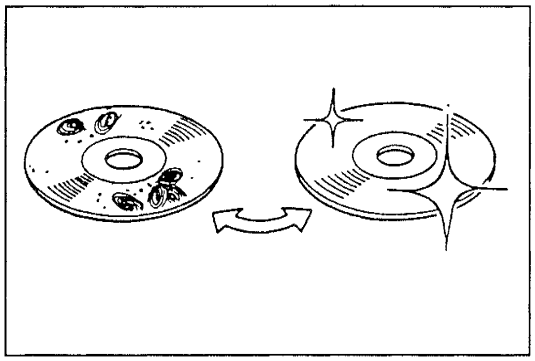

Step 1
Play a known good compact disc and check the sound quality.

Sound quality	Action
Normal	None (Previous compact disc defective)
Poor	Go to Step 2

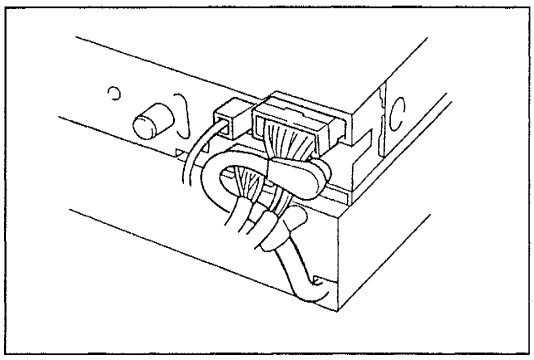

Step 2
1. Remove the audio unit and CD player.
   (Refer to page J–27.)
2. Verify that the DIN cord and audio unit connectors are properly connected. Reconnect them if necessary.
3. If the connections are OK, replace the CD player.

Symptom	Poor sound quality in all cases (radio, cassette tape, and compact disc modes)

Possible cause
- Damaged speaker
- Open or short circuit in wiring harness
- Poor connection of connector

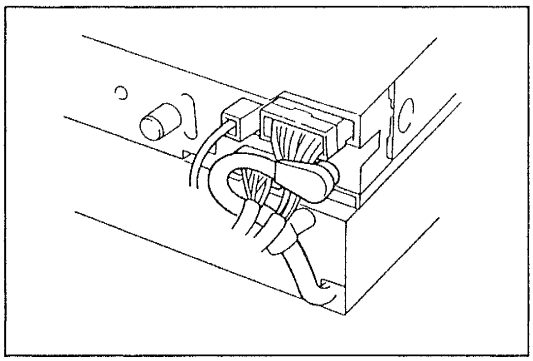

Step 1
1. Remove the audio unit and CD player. (Refer to page J–27.)
2. Verify that the DIN cord and audio unit connectors are properly connected. Reconnect them if necessary.
3. If the connections are OK, go to step 2.

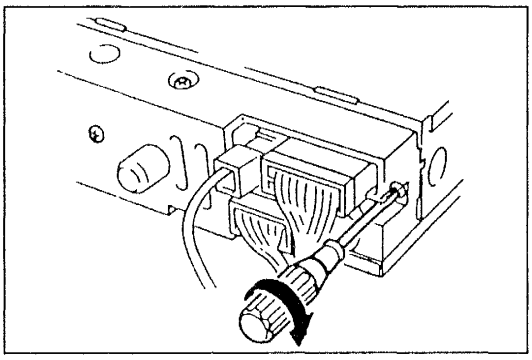

Step 2
Check the audio unit mounting screws for proper tightness.

Screws	Action
OK	Go to Step 3
Loose	Tighten screws

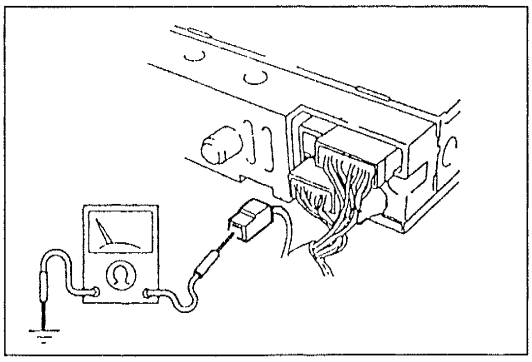

Step 3
1. Disconnect the audio unit connector.
2. Check for continuity between terminal 3A (B/L) of the audio unit connector and ground.

Continuity	Action
Yes	Go to Step 4
No	Repair wiring harness (Audio unit—GND)

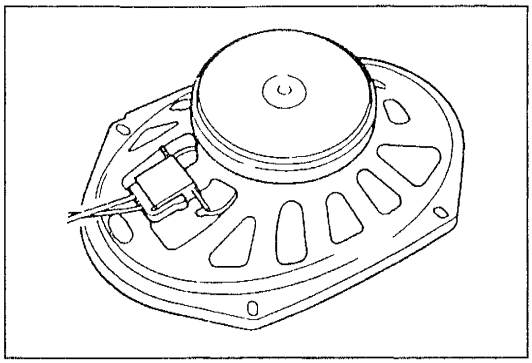

Step 4
1. Locate the speaker with poor sound and remove it. (Refer to pages J–27, 28.)
2. Disconnect the speaker connectors and measure the resistance of each speaker.

Speaker	Resistance
Front	3.2Ω
Door	4Ω
Rear	4Ω

3. If correct, repair wiring harness. (audio unit—speaker)
4. If not as specified, replace speaker. (Refer to pages J–27, 28)

Symptom	Noise occurs

Possible cause
(1) Defective or improperly installed audio unit
(2) Ambient noise
(3) Vehicle-induced noise

(1) Defective or improperly installed audio unit.

Problem	Action
Noise occurs only when radio is played 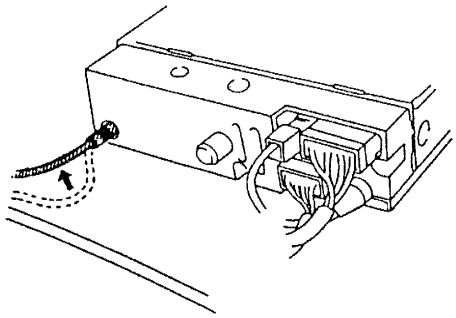	1. Refer to page J–13, "Poor sound quality only when radio is played". 2. Secure audio unit antenna feeder away from other wiring harnesses.
Noise occurs only when cassette tape is played	Refer to page J–14, "Poor sound quality only when cassette tape is played".
Noise occurs only when compact disc is played 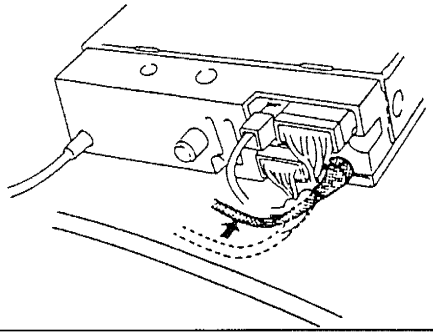	1. Refer to page J–15, "Poor sound quality only when compact disc is played". 2. Secure DIN cord between audio unit and CD player away from other wiring harnesses.
Noise occurs in all cases 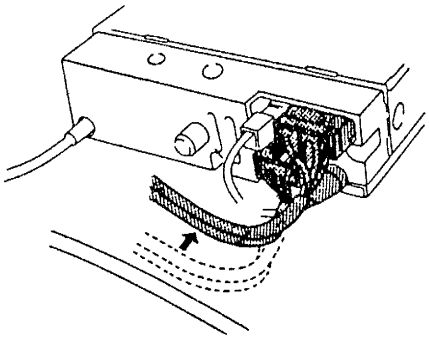	1. Refer to page J–16, "Poor sound quality" in all cases (radio, cassette tape, and compact disc modes). 2. Secure harness between audio unit and speakers away from other wiring harnesses.

(2) Ambient noise

1. Fading (AM radio)
   Fading occurs when AM sound waves, which are reflected by the ionosphere during transmission, are obstructed.
2. Fast fading and multipath noise (FM radio)
   Fast fading occurs when FM sound waves are obstructed by mountains or buildings.
   Multipath noise occurs when the radio on a vehicle picks up a direct wave and a reflected wave at the same time.

(3) Vehicle-induced noise

Name of noise		Condition
Noise when engine is started	Fuel pump noise	Noise occurs immediately after ignition switch is turned to ON
	Ignition noise	Consecutive noise Tone changes when acceleration pedal is depressed
	Alternator noise	Whizzing noise occurs when acceleration pedal is depressed
Noise when electrical parts are operated	Wiper motor noise	Howling noise occurs synchronized with wiper operation
	Washer motor noise	Noise occurs when window washer is operated
	Power window noise	Noise occurs when power window is operated
	Fan motor noise	Noise occurs when fan is operated
	Brake noise	Noise occurs at beginning or end of brake operation
	Turn signal noise	Clicking noise occurs synchronized with signal flash
	Horn switch noise	Whizzing noise occurs when acceleration pedal is depressed
	Air conditioner noise	Howling noise occurs when air conditioner is operated

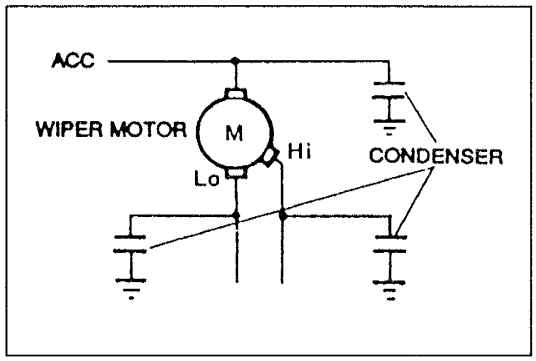

Although it is difficult to eliminate these noises, they can be reduced by installing a noise suppressor or noise-preventive capacitor near the electrical system which emits the noise current. For example, to reduce wiper motor noise, install the noise preventive capacitors near the wiper motor. If the noise preventive device does not work, check for a proper ground connection.

Symptom	CD skips or cannot be loaded / unloaded

Problem	Possible cause	Action
CD skips	1. Faulty CD player	• Use good CD player • Wipe disc clean
	2. Improper installation of CD player	• Install CD properly
	3. Strong shocks	Reduce shocks to CD player
CD cannot be loaded	1. Warped disc	Use good disc
	2. Foreign material in disc slot	• Remove foreign material • Replace CD player
	3. CD is not receiving power	Remove CD player and verify that power is supplied (Refer to page J–22)
CD cannot be unloaded	1. Improperly loaded disc	Replace CD player
	2. CD is not receiving power	Remove CD player and verify that power is supplied (Refer to page J–22)

Symptom	Cassette tape playback not possible; cassette tape cannot be ejected; reverse function works unintentionally

Note
- Loosely wound or stretched cassette tape can become tangled in the cassette deck and make unloading impossible.

Problem	Possible cause	Action
Tape playback not possible (eject function works normally)	1. Cassette tape is cut	Use good cassette tape
	2. Cassette tape is loosely wound	Eliminate sag in cassette tape by using pencil
	3. Cassette tape is stretched	Use good cassette tape
Cassette tape cannot be ejected	1. Cassette label has peeled off and is keeping cassette caught in system 2. Cassette tape is tangled in system 3. Damaged cassette deck	Contact sales shop
Reverse function works unintentionally	Cassette tape is roughly wound	Fast forward or rewind cassette tape to wind it uniformly and firmly

Symptom	Cassette tape does not load or playback not possible

Possible cause
- Damaged cassette tape
- Damaged audio unit
- Open or short circuit in wiring harness
- Poor connection of connector

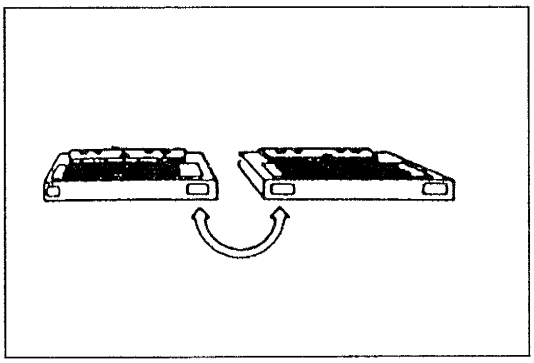

Step 1
Replace the cassette tape with a known good one and check cassette tape operation.

Old cassette	New cassette	Action
Does not load	Loads	Replace old cassette tape (system OK)
	Does not load	Go to Step 3
Playback not possible	Plays	Replace old cassette tape (system OK)
	Does not play	Go to Step 2

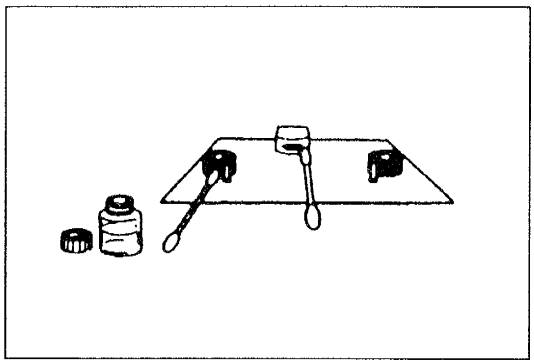

Step 2

1. Clean the heads and pinchroller by using a cassette tape player cleaning kit.
2. Check cassette tape operation.
3. If the cassette tape still does not play, go to Step 3.

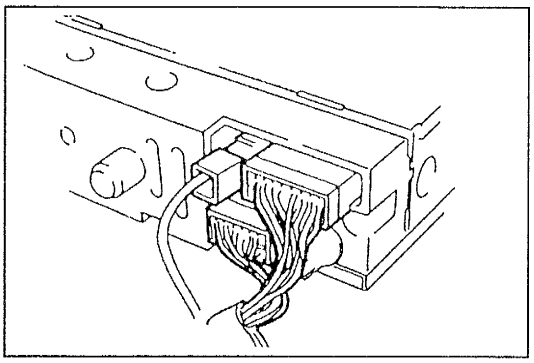

Step 3

1. Remove the audio unit.
   (Refer to page J–27.)
2. Verify that the audio unit connectors are properly connected. Reconnect them if necessary.
3. If the connections are OK, go to Step 4.

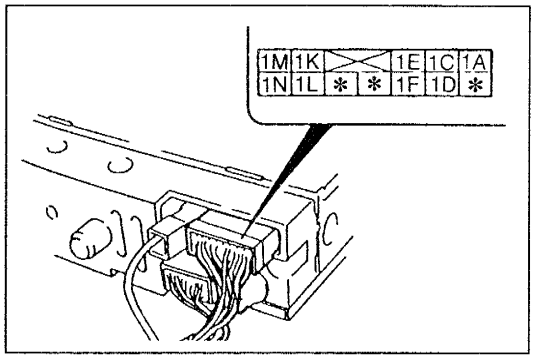

Step 4

1. Turn the ignition switch to ACC.
2. Measure the voltage at terminals 1A (L/W) and 1C (L/R) of the audio unit connector.

B+: Battery positive voltage

Terminal	Voltage	Action
1A	B+	Measure voltage at terminal 1C
	Other	Repair wiring harness (RADIO 15 A fuse—Audio unit)
1C	B+	Go to Step 5
	Other	Repair wiring harness (ROOM 15 A fuse—Audio unit)

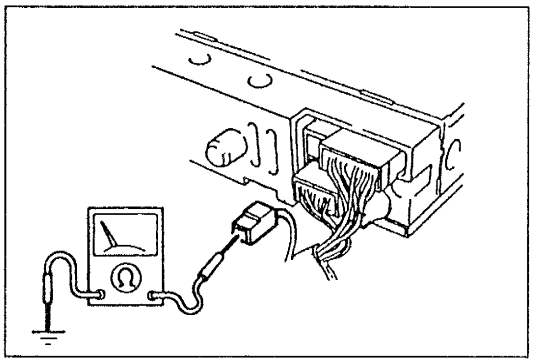

Step 5

1. Disconnect the audio unit connector.
2. Check for continuity between terminal 3A (B/L) of the audio unit connector and ground.

Continuity	Action
Yes	Replace audio unit (Refer to page J–27)
No	Repair wiring harness (Audio unit—GND)

Symptom	Compact disc does not play

Possible cause
- Damaged compact disc
- Fogged optical lens
- Damaged audio unit
- Damaged CD player
- Open or short circuit in wiring harness
- Poor connection of connector

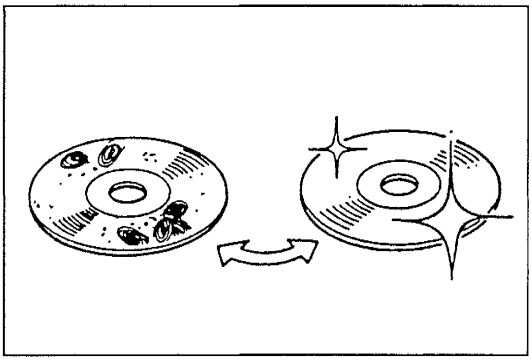

Step 1
Check the operation of a known good compact disc.

New compact disc	Action
Operates	Previous compact disc defective
Does not operate	Go to Step 2

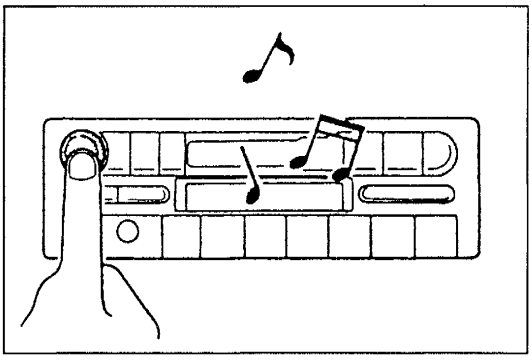

Step 2
Check radio operation.

Radio	Action
Operates	Go to Step 3
Does not operate	Replace audio unit (Refer to page J–27)

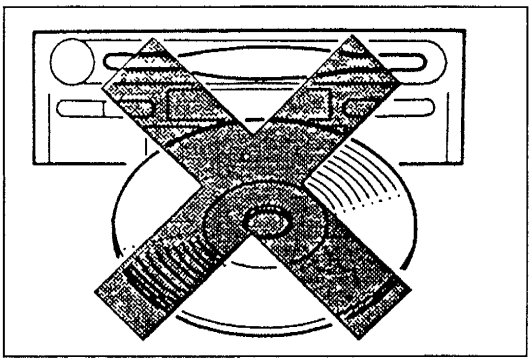

Step 3
1. Wait for one hour after the power is turned on and play the disc. The optical lens may be fogged.
2. If the system still does not operate properly, go to Step 4.

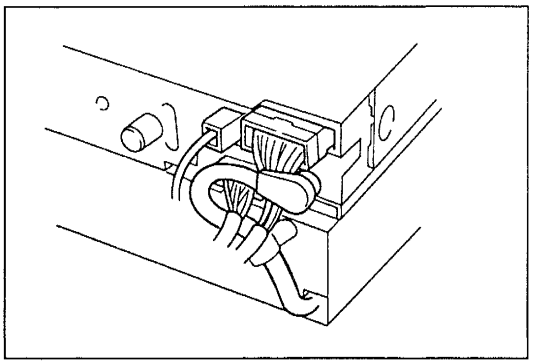

Step 4
1. Remove the audio unit and CD player. (Refer to page J–27.)
2. Verify that the DIN cord and audio unit connectors are properly connected. Reconnect them if necessary.
3. If the connections are OK, go to Step 5.

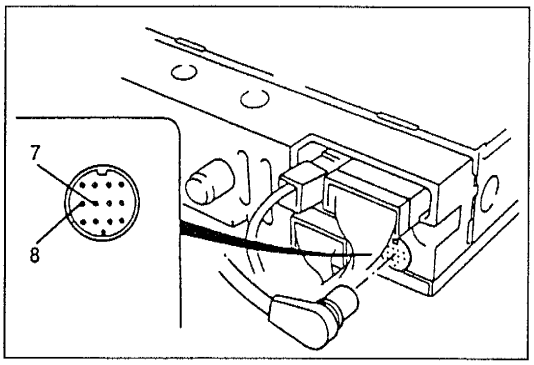

Step 5

1. Disconnect the audio unit DIN cord.
2. Turn the ignition switch to ACC.
3. Measure the voltage at terminals 7 and 8 of the DIN cord.

B+: Battery positive voltage

Terminal	Voltage	Action
7	B+	Check terminal 8
	Other	Replace audio unit (Refer to page J–27)
8	B+	Replace CD player (Refer to page J–27)
	Other	Replace audio unit (Refer to page J–27)

J-2 ■ POWER ANTENNA

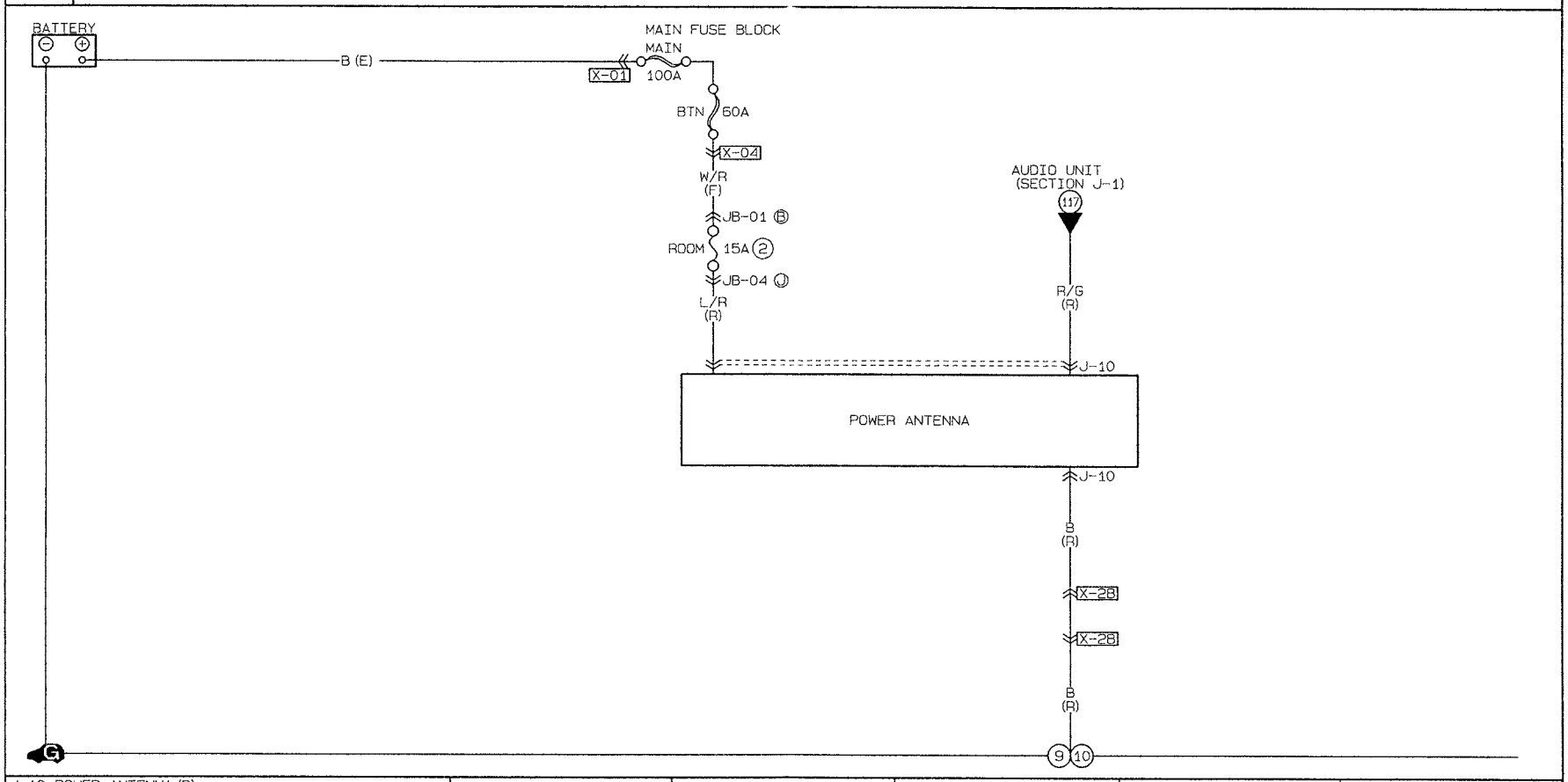

J-10 POWER ANTENNA (R)

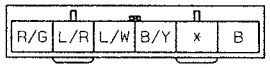

J-2

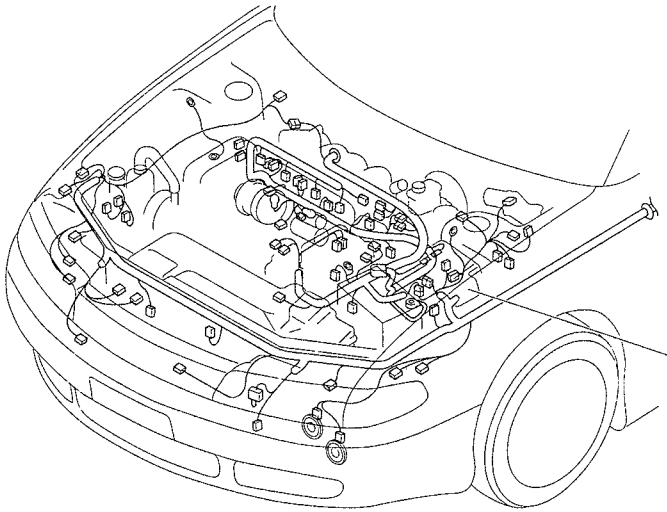

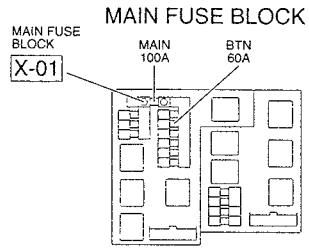

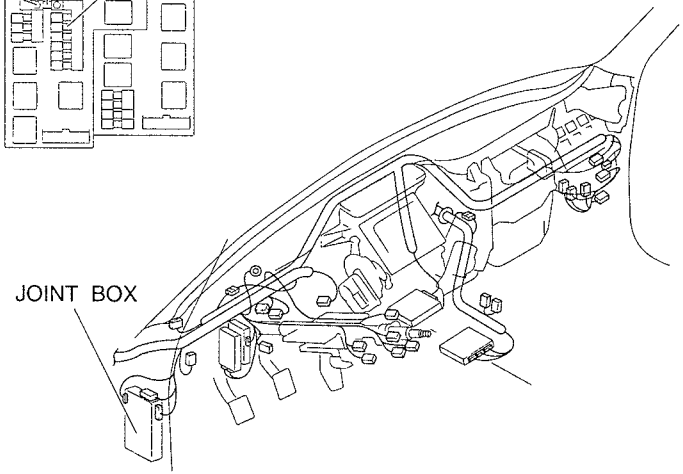

JOINT BOX

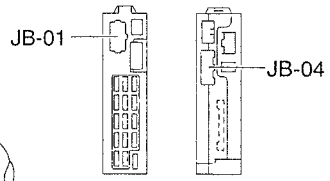

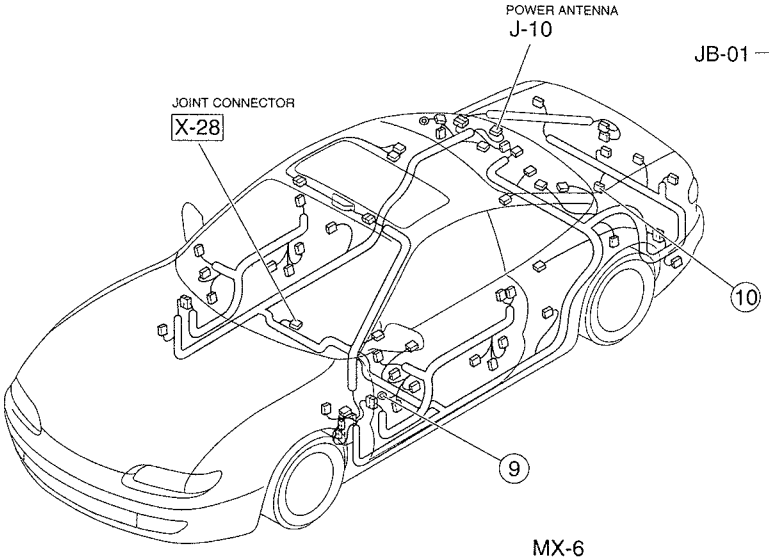

MX-6

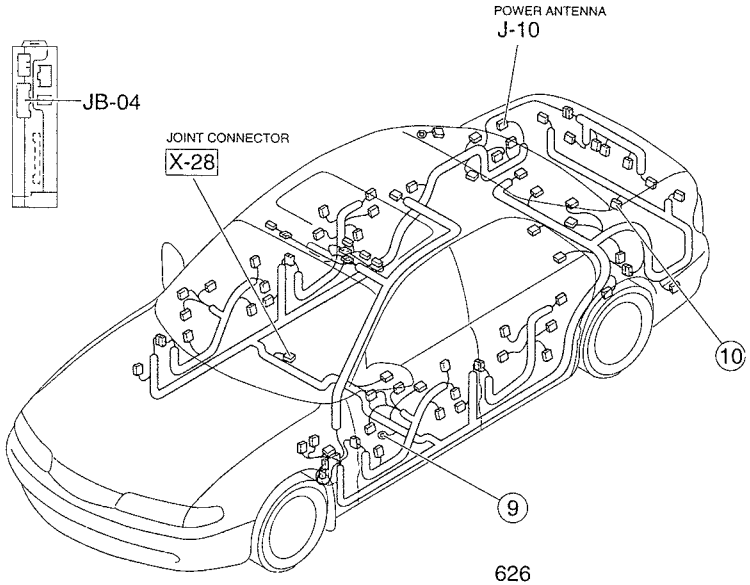

626

Symptom	Power antenna does not operate

Possible cause
- Damaged audio unit
- Damaged power antenna
- Open or short circuit in wiring harness
- Poor connection of connector

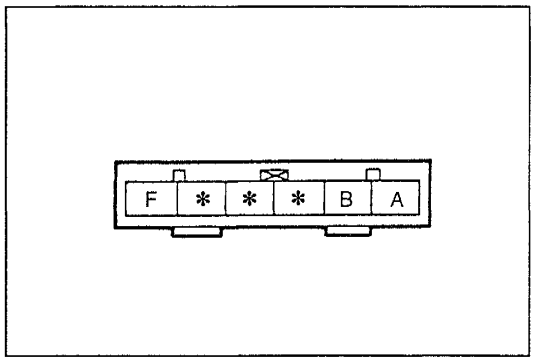

Step 1
1. Turn the ignition switch to ACC and turn the audio power switch on.
2. Measure the voltage at the terminals of the power antenna connector.

B+: Battery positive voltage

Terminal	Voltage	Action
B	B+	Measure voltage at terminal A
	Other	Repair wiring harness (ROOM 15A fuse—Power antenna)
A	B+	Go to Step 2
	Other	Go to Step 3

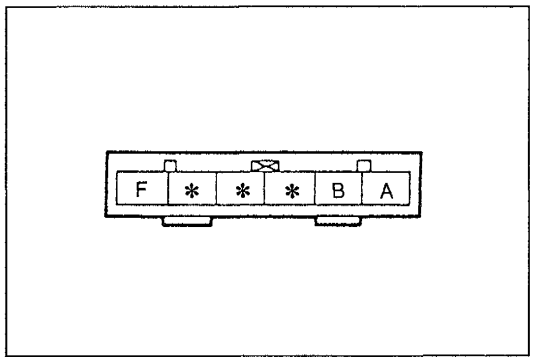

Step 2
1. Turn the ignition switch to LOCK.
2. Disconnect the power antenna connector.
3. Check for continuity between terminal F (B) of the power antenna connector and ground.

Continuity	Action
Yes	Replace power antenna (Refer to page J–29)
No	Repair wiring harness (Power antenna—GND)

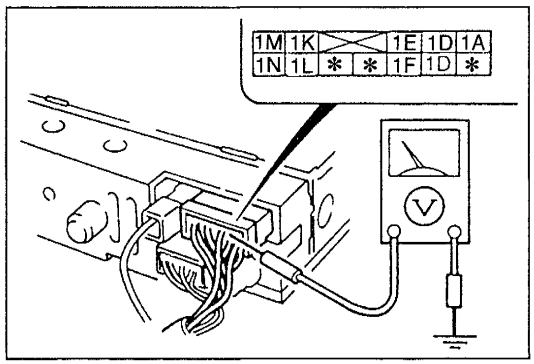

Step 3
1. Remove the audio unit. (Refer to page J–27.)
2. Turn the ignition switch to ACC and turn the audio power switch on.
3. Measure the voltage at terminal 1D (LG/W) of the audio unit connector.

B+: Battery positive voltage

Continuity	Action
B+	Repair wiring harness (Audio unit—Power antenna)
Other	Replace audio unit (Refer to page J–27)

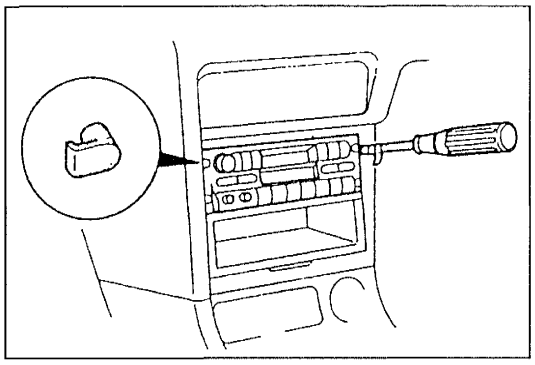

AUDIO UNIT

Removal

1. Pry out the service hole covers of the audio unit by using a flathead screwdriver which has been wrapped in tape. Keep the hole covers for installation.

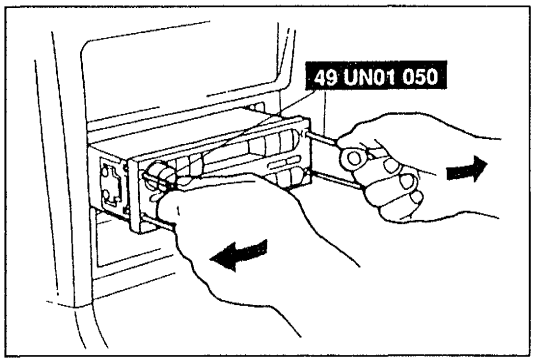

2. With the beveled parts of the **SST** facing inward, insert them into the audio unit.
3. Pull the **SST** outward and rearward to slide out the audio unit.
4. Disconnect the connector and antenna jack.

Installation

1. Install the audio unit service hole covers.
2. Connect the audio unit connectors and insert the audio unit. Make sure the wiring harness and antenna feeder do not become trapped.

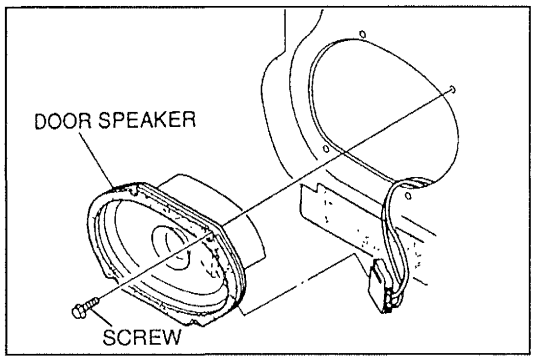

DOOR SPEAKER

Removal / Installation

1. Remove the door trim.
   (Refer to the 1996 626/MX-6 Workshop Manual, section S.)
2. Remove the screws and the door speaker.
3. Install in the reverse order of removal.

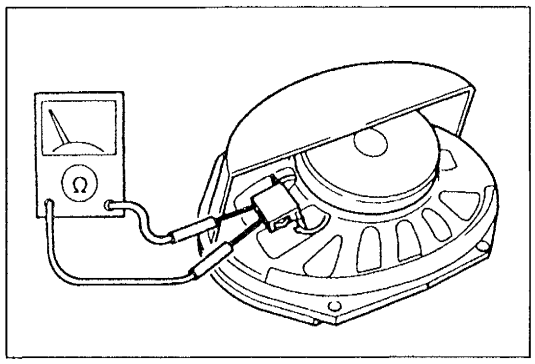

Inspection

1. Remove the door speaker.
2. Measure the resistance of the speaker.

   Resistance: 4Ω

3. If not as specified, replace the speaker.

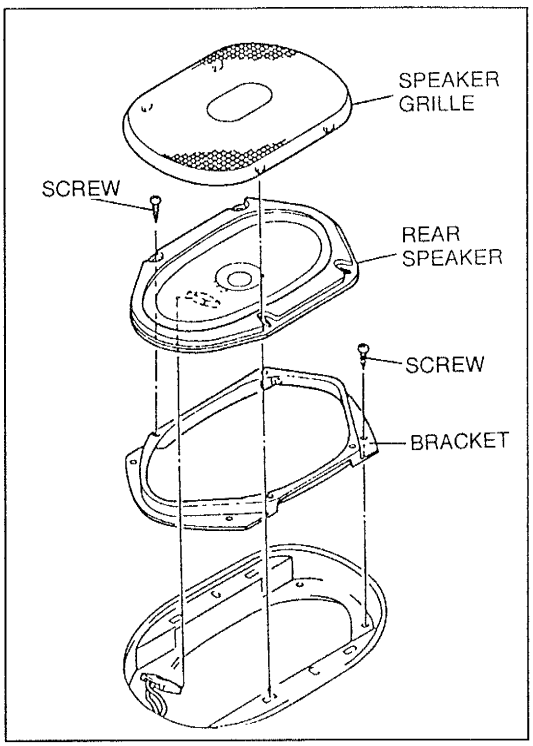

REAR SPEAKER

Removal / Installation

1. Remove the rear speaker grille.
2. Remove the screws and rear speaker.
3. Install in the reverse order of removal.

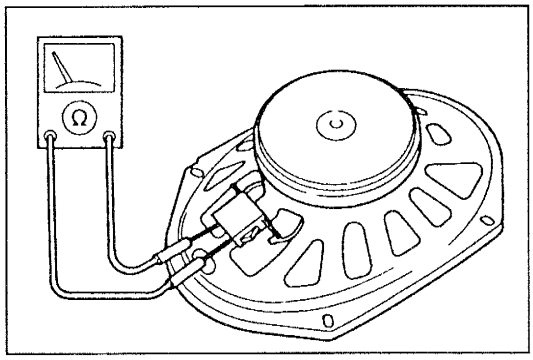

Inspection

1. Remove the rear speaker.
2. Measure the resistance of the speaker.

   Resistance: 4Ω

3. If not as specified, replace the rear speaker.

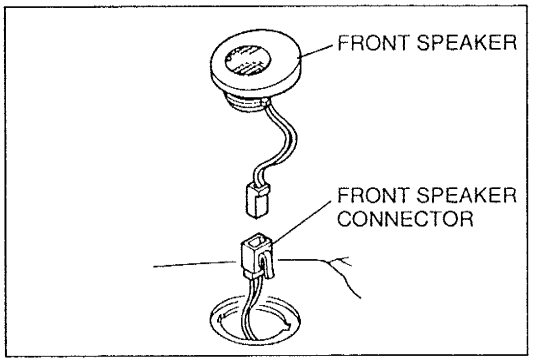

FRONT SPEAKER

Removal / Installation

1. Insert a flathead screwdriver which has been wrapped in tape as shown in the figure.
2. Disconnect the connector to remove the front speaker.
3. To install the speaker, connect the connector and push the speaker into the hole.

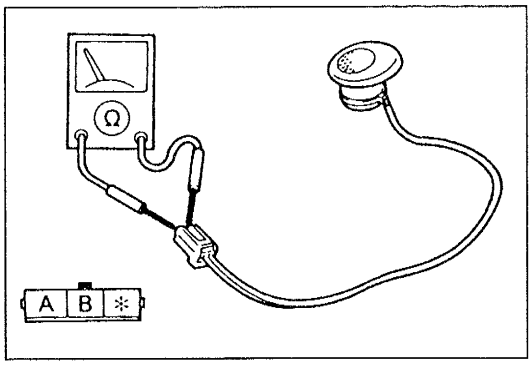

Inspection

1. Remove the front speaker.
2. Measure the resistance of the speaker.

   Resistance: 3.2Ω

3. If not as specified, replace the speaker.

POWER ANTENNA

Removal / Installation

1. Remove the trunk side trim.
   (Refer to the 1996 626/MX-6 Workshop Manual, section S.)
2. Disconnect the power antenna connector and antenna feeder.
3. Remove in the order shown in the figure, referring to **Removal note**.
4. Install in the reverse order of removal.

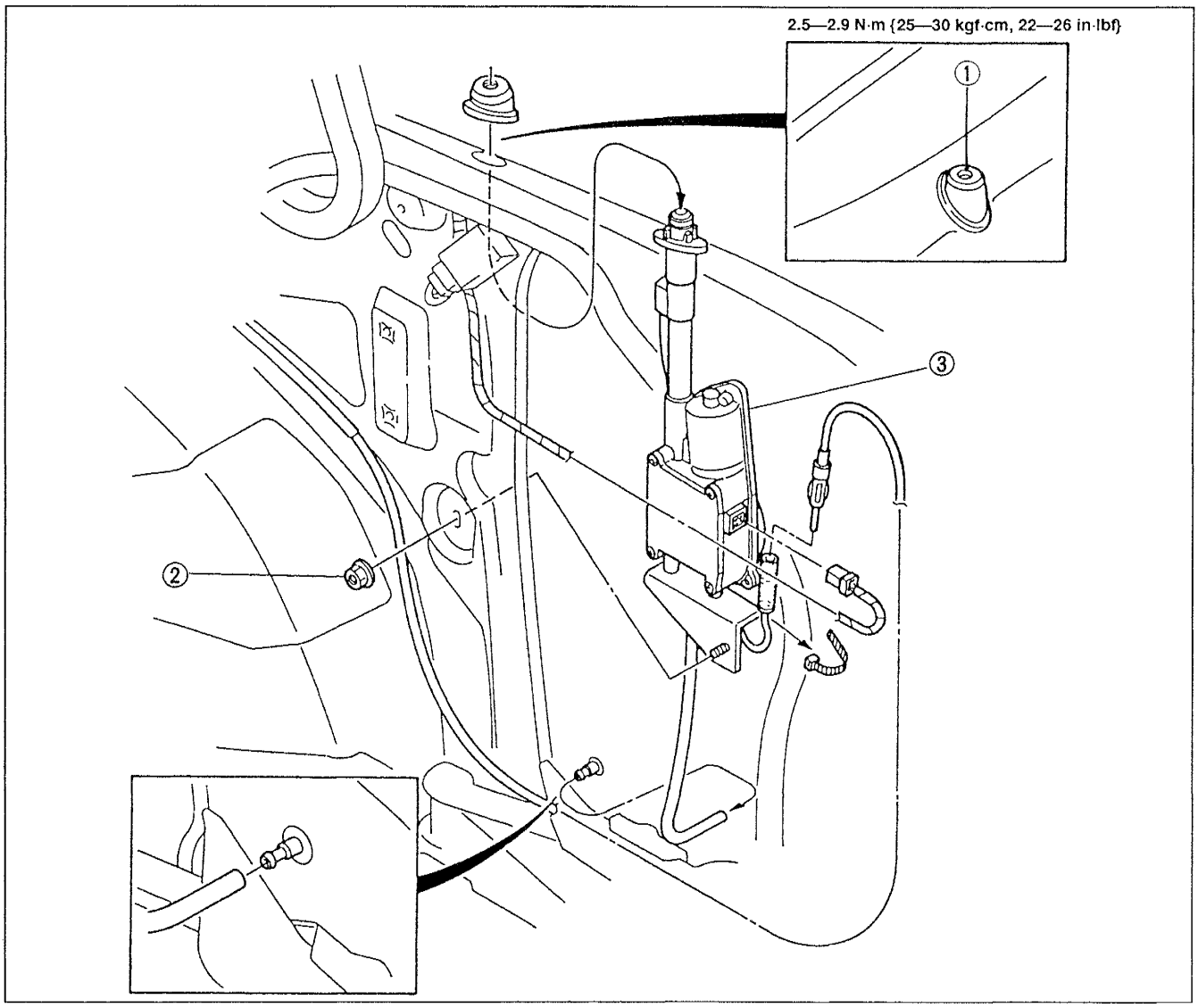

1. Mounting nut
   Removal note ..... below
2. Nut
3. Power antenna
   Disassembly / Assembly ..... page J–30
   Inspection ..... page J–31

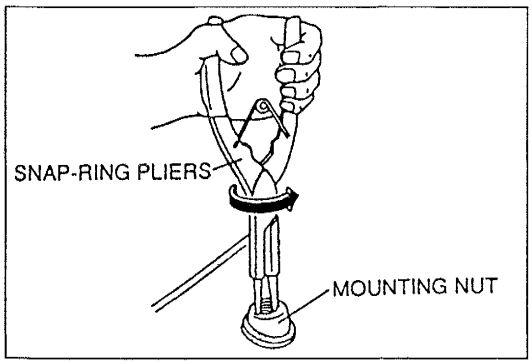

Removal note

Mounting nut

Use snap-ring pliers as shown to remove the mounting nut.

Disassembly / Assembly

1. Remove the antenna mast.
   (Refer to page J–31.)
2. Remove the power antenna.
   (Refer to page J–29.)
3. Disassemble in the order shown in the figure.
4. Assemble in the reverse order of disassembly.

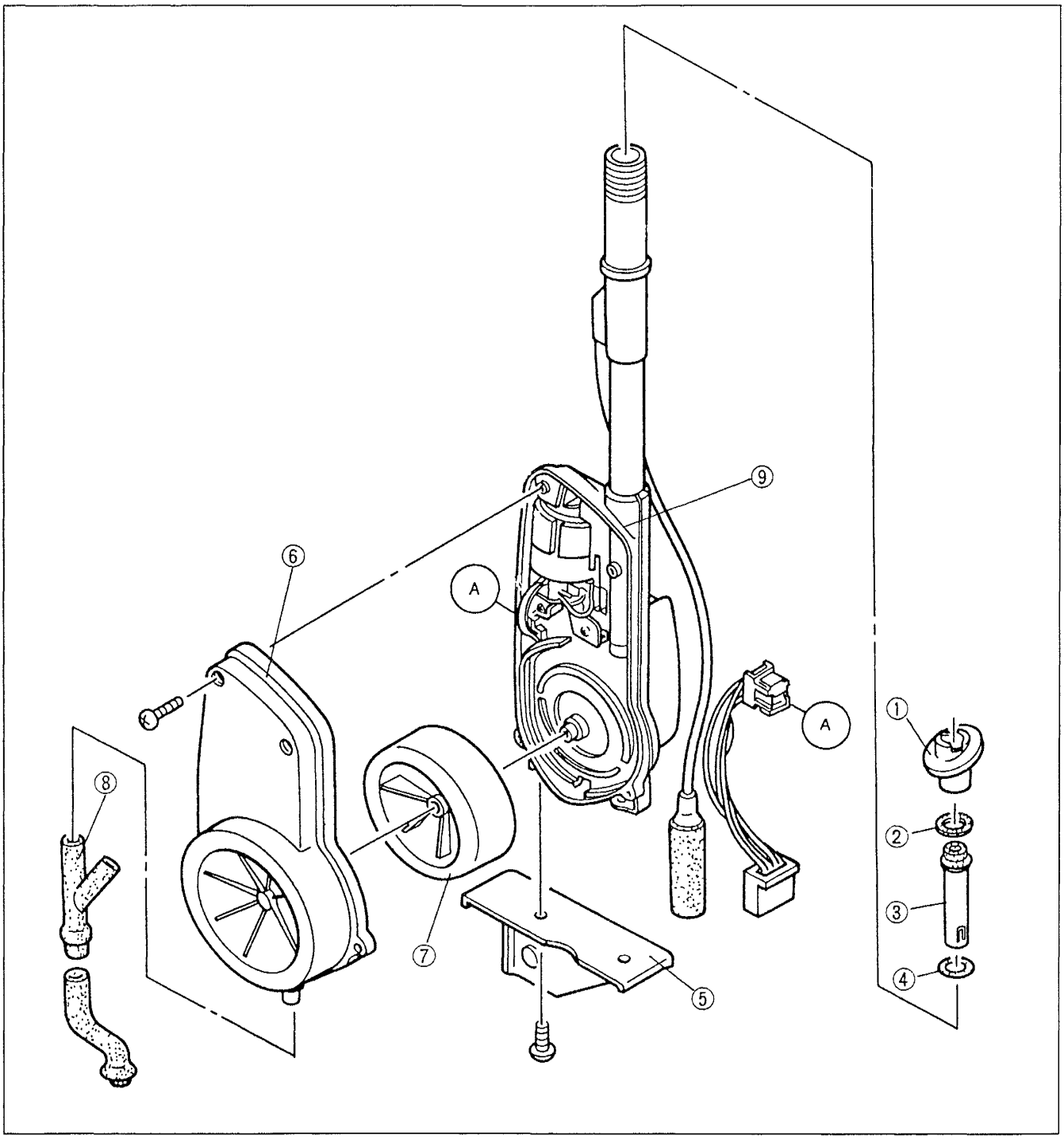

1. Ground plate
2. O-ring
3. Rod insulator
4. O-ring
5. Bracket
6. Drive mechanism cover
7. Drive mechanism
8. Drain pipe
9. Power antenna motor

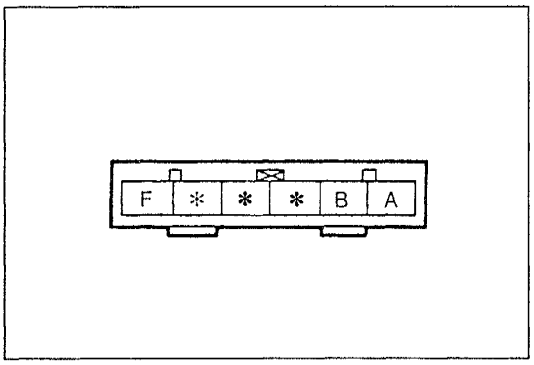

Inspection

1. Disconnect the power antenna connector.
2. Connect terminal F to ground.
3. Apply battery positive voltage as indicated below and check the operation of the antenna.

B+: Battery positive voltage

Terminal		Antenna operation
A	B	
	+B	DOWN
+B	+B	UP

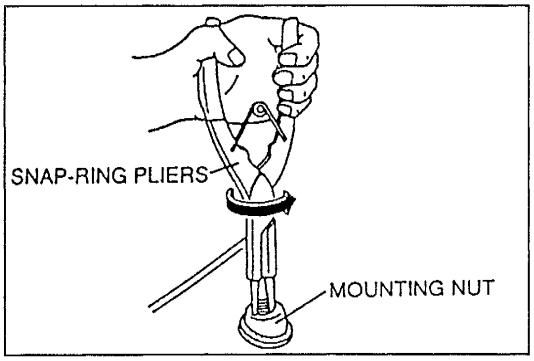

ANTENNA MAST

Removal / Installation

1. Use snap-ring pliers to remove the mounting nut. (Refer to page J–29.)

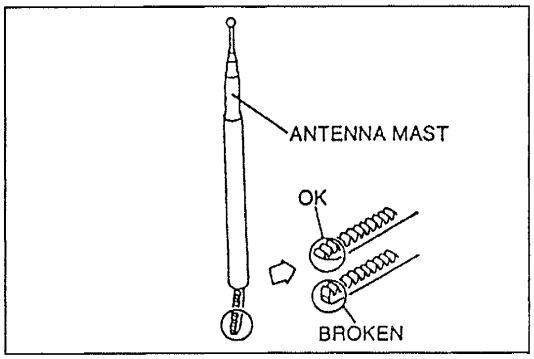

2. With the ignition switch at ACC or ON, turn the radio on and pull out the antenna mast. Check the end of the plastic rack for damage. If the rack end is kinked or broken, replace the motor.

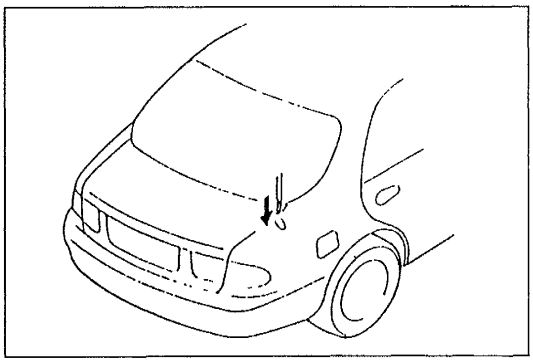

3. With the ignition switch at ACC or ON and the radio on, feed the rack of the new mast into the motor with the toothed side facing the front of the vehicle.
4. Turn the radio off. While the motor is retracting the rack, feed the mast into the motor.
5. Reinstall the mounting nut.

   Tightening torque:
   2.5—2.9 N·m {25—30 kgf·cm, 22—26 in·lbf}

6. With the ignition switch at ACC or ON, turn the radio on and off a few times and verify that the antenna operates smoothly.

MANUAL ANTENNA
Removal / Installation
626 only

1. Remove the trunk side trim.
   (Refer to the 1996 626/MX-6 Workshop Manual, section S.)
2. Disconnect the antenna feeder.
3. Remove in the order shown in the figure, referring to **Removal note**.
4. Install in the reverse order of removal.

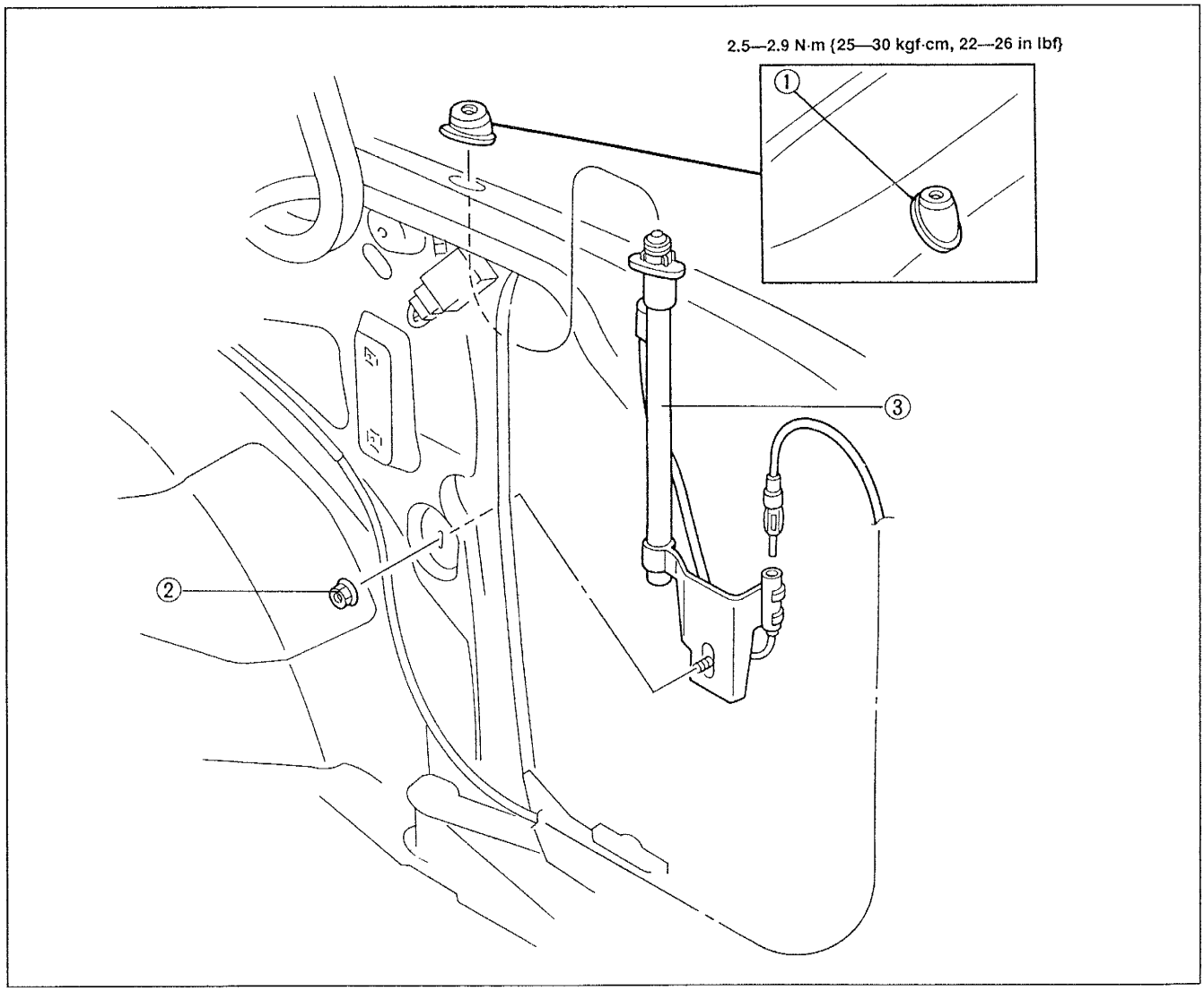

1. Mounting nut
   Removal note ..... below
2. Nut
3. Antenna

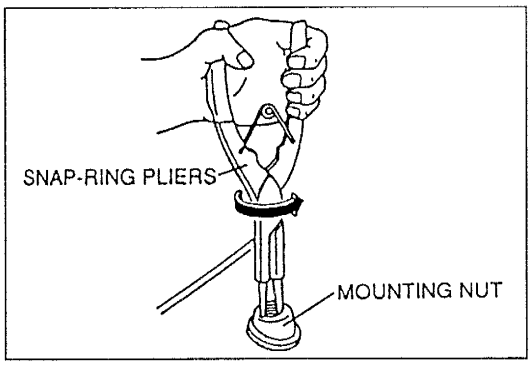

Removal note
Mounting nut
Use snap-ring pliers shown to remove the mounting nut.

ANTENNA FEEDER

Removal / Installation

1. Remove the floor covering.
   (Refer to the 1996 626/MX-6 Workshop Manual, section S.)
2. Remove in the order shown in the figure.
3. Install in the reverse order of removal.

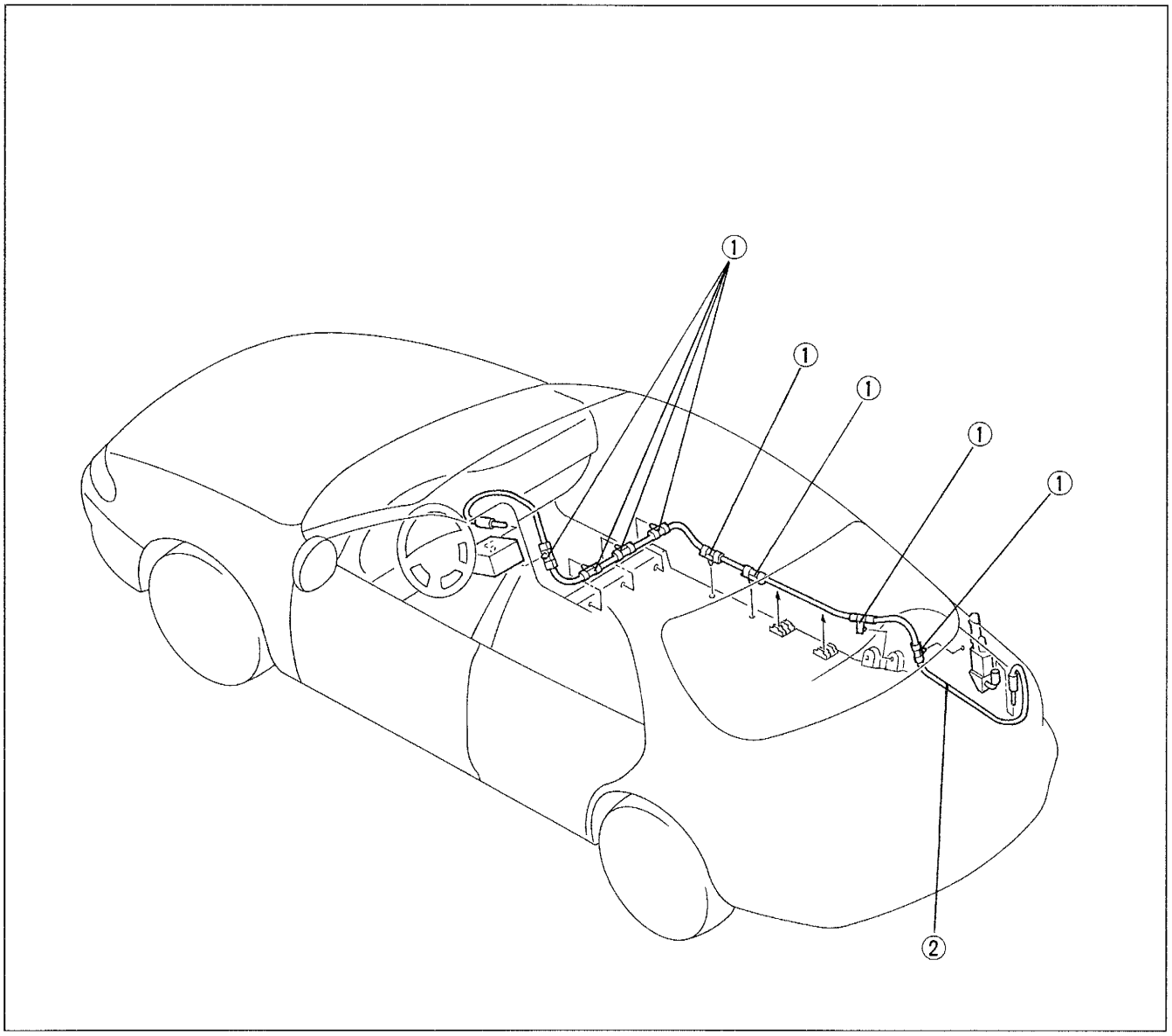

1. Clips
2. Antenna feeder

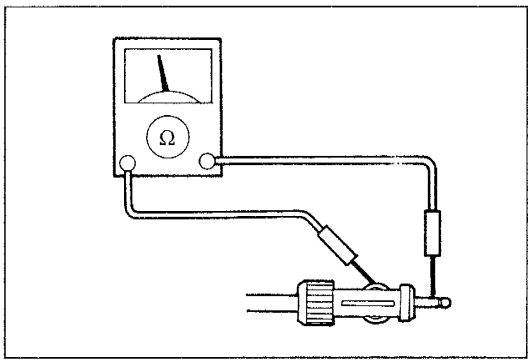

Inspection

1. Disconnect the antenna jack.
2. Check the antenna by using an ohmmeter.

   Resistance: Infinite

3. If not as specified, replace the antenna feeder.

Before beginning any service procedure, refer to section S of this manual for air bag system service warnings.

POWER WINDOW SYSTEM

POWER WINDOW SYSTEM

STRUCTURAL VIEW

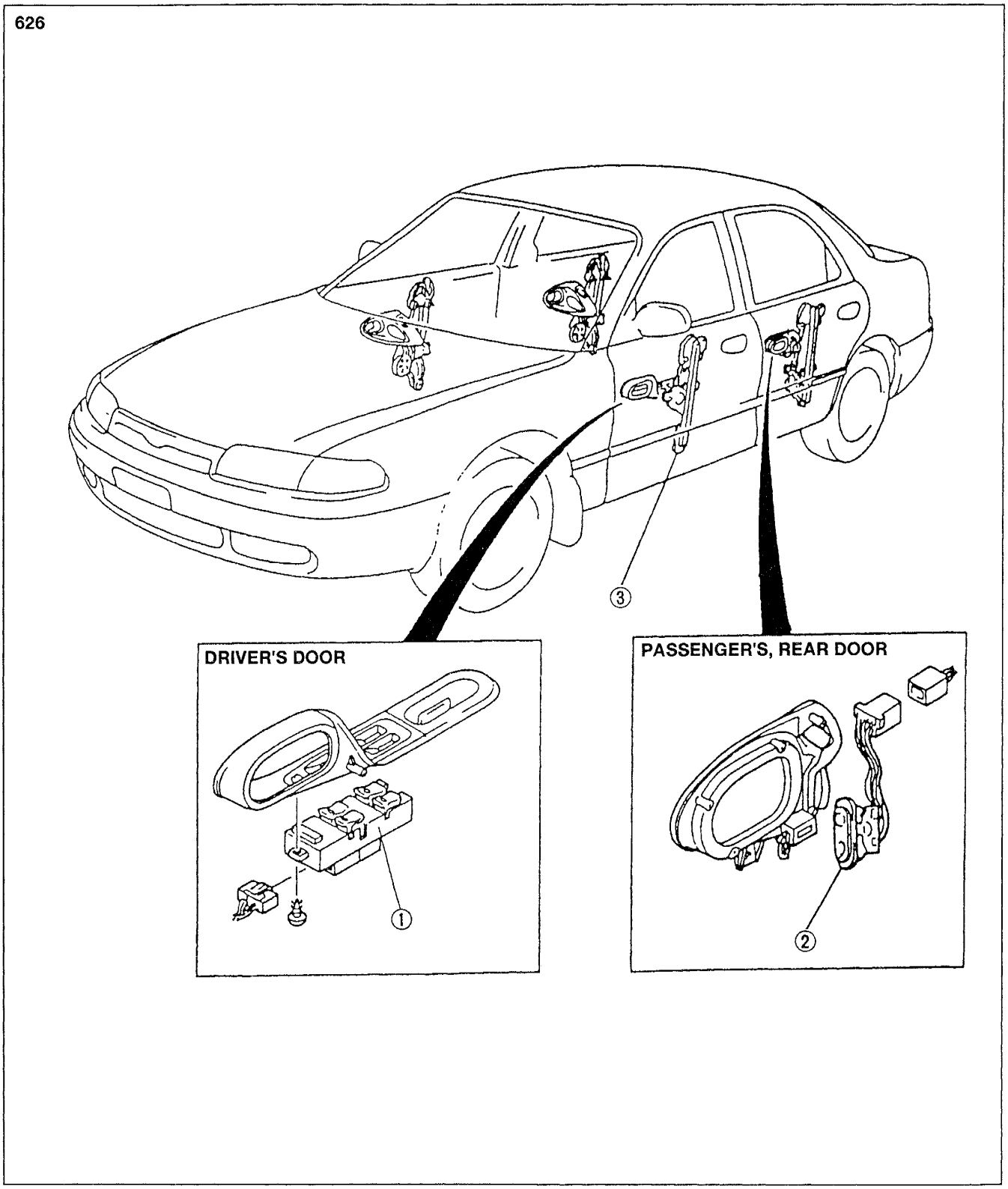

1. Power window main switch assembly
   Inspection ..... page K1–17
2. Power window subswitch
   Inspection ..... page K1–18
3. Power window regulator
   Inspection ..... page K1–18
   Removal / Installation
   (front) ..... page K1–19
   (rear) .....page K1–20

MX-6

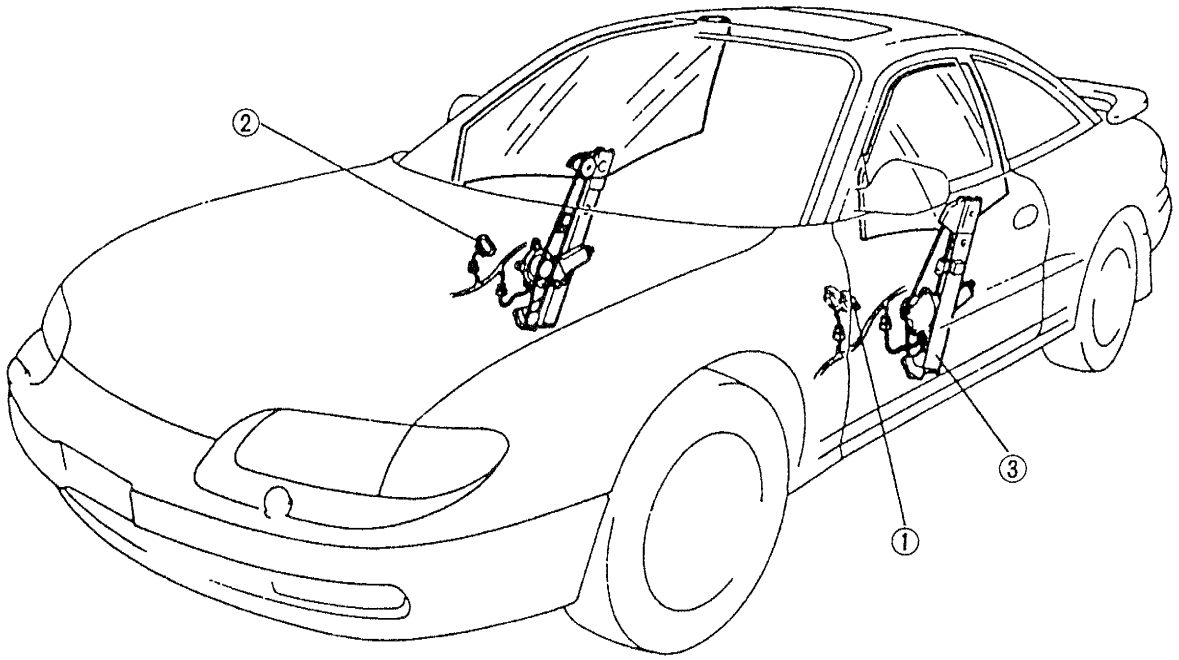

1. Power window main switch assembly
   Inspection ..... page K1–17
2. Power window subswitch
   Inspection ..... page K1–18
3. Power window regulator
   Inspection ..... page K1–18
   Removal / Installation ..... page K1–21

SYSTEM DIAGRAM

626

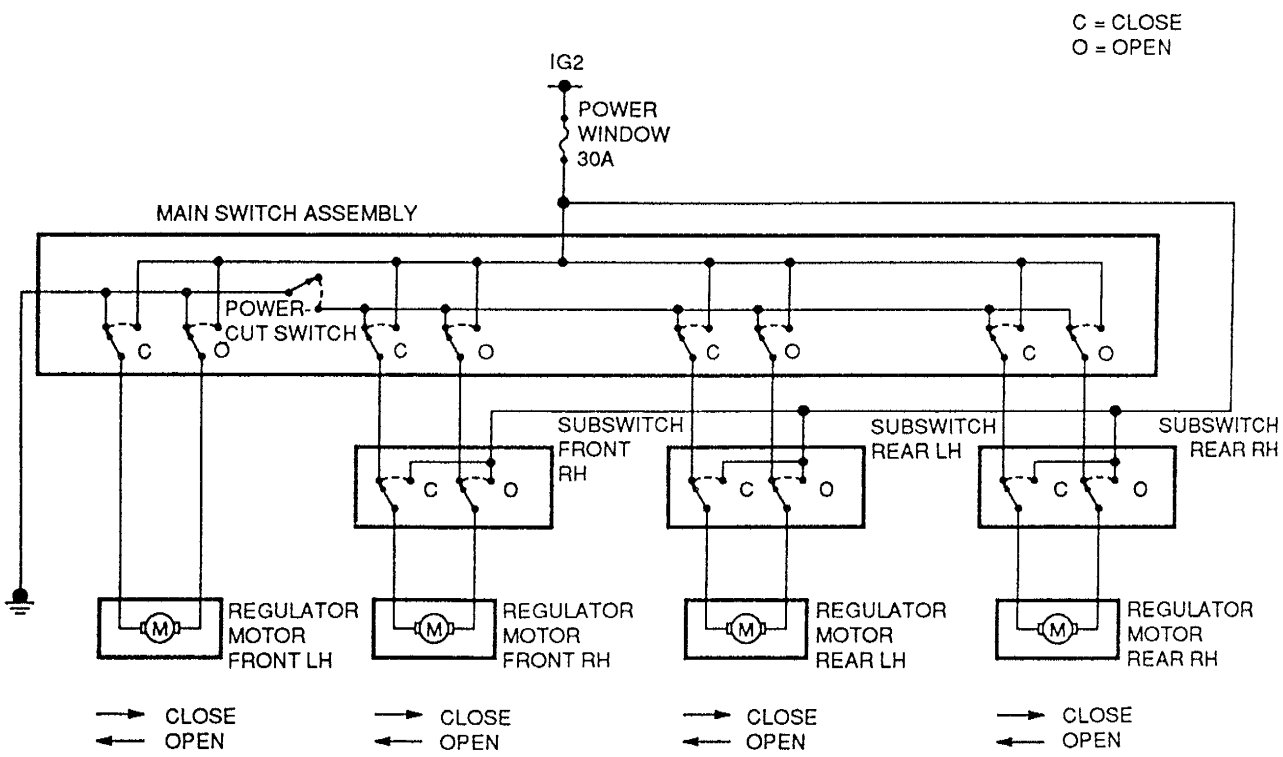

MX-6

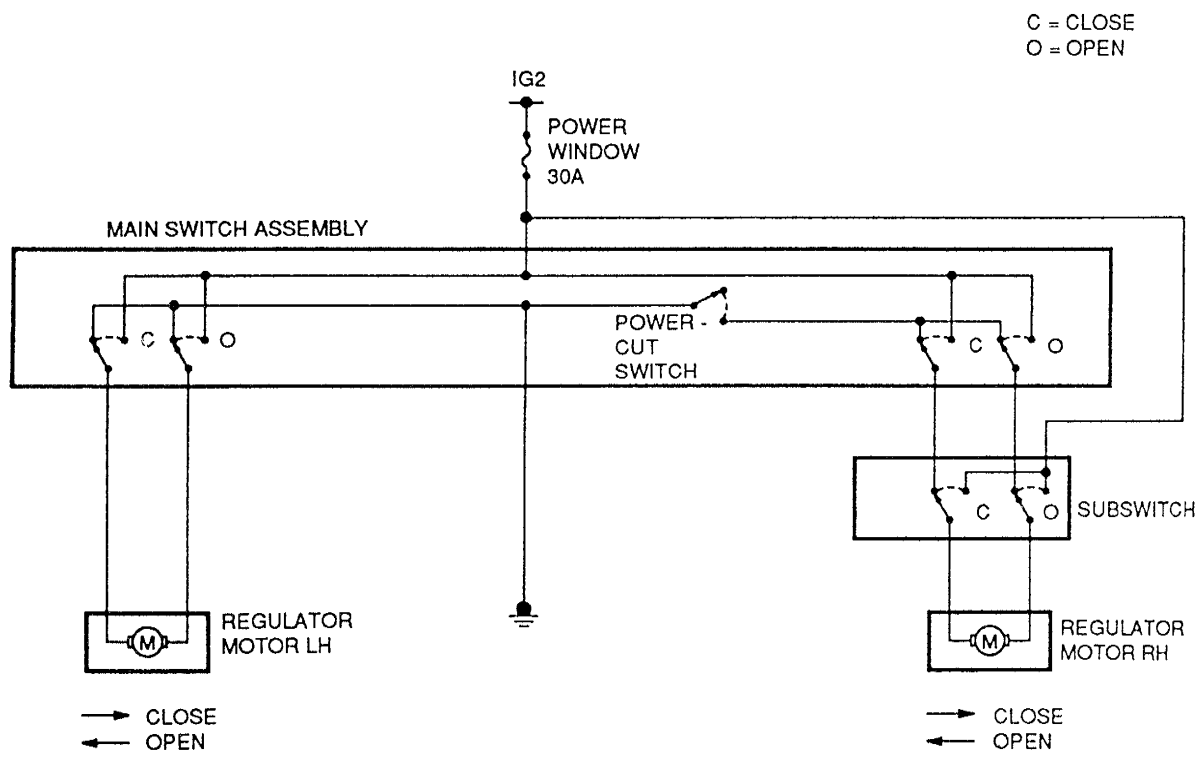

Description

The power window system consists of the power window main switch assembly, power window subswitches, and power window regulators.

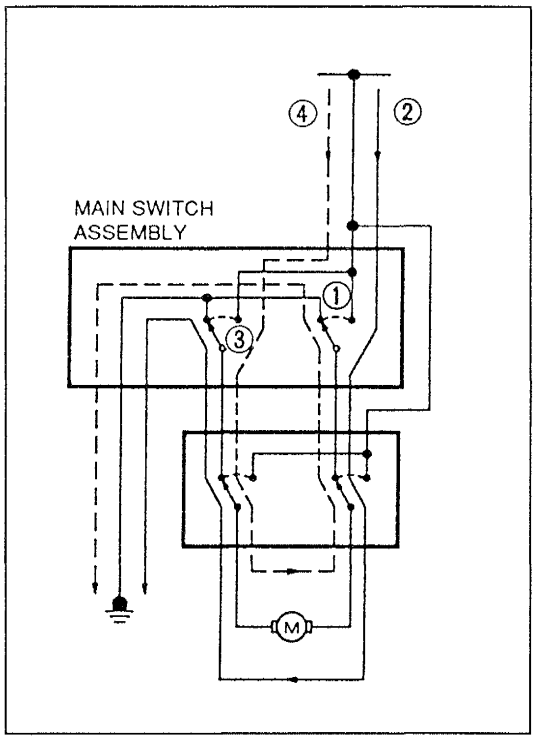

System Operation

1. Main switch assembly

- When one of the main switches is pressed, the switch closes ①, and current ② (solid line) flows. The regulator motor rotates and the window opens.
- When the switch is lifted, it closes ③, and current ④ (broken line) flows. The motor rotates in the opposite direction and the window closes.

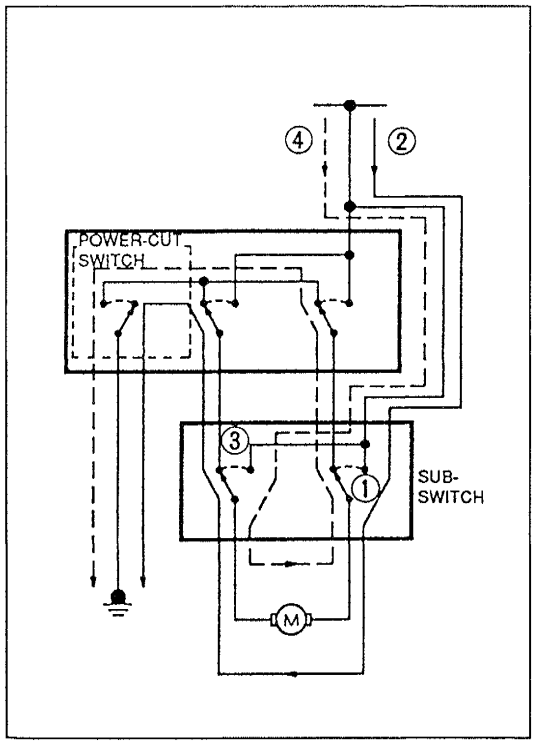

2. Subswitches

- When the top of a subswitch is pressed with the power-cut switch at ON, the switch closes ①, and current ② (solid line) flows. The regulator motor rotates and the window opens.
- When the bottom of the subswitch is pressed, the switch closes ③, and current ④ (broken line) flows. The motor rotates in the opposite direction and the window closes.

K-1 626 ■ POWER WINDOWS

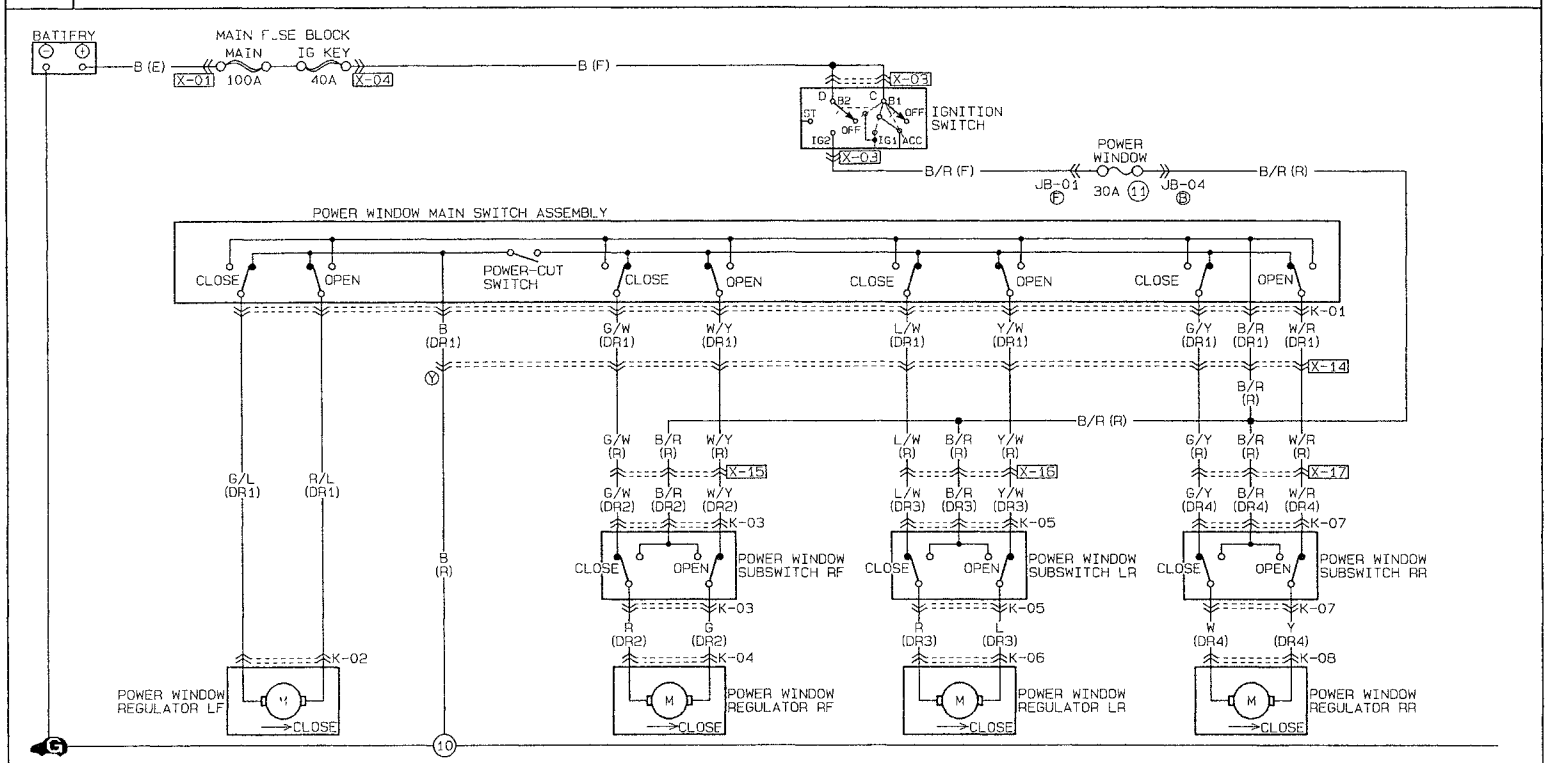

K-01 POWER WINDOW MAIN SWITCH ASSEMBLY (DR1)	K-02 POWER WINDOW REGULATOR LF (DR1)	K-03 POWER WINDOW SUBSWITCH RF (DR2)	K-04 POWER WINDOW REGULATOR RF (DR2)	K-05 POWER WINDOW SUBSWITCH LR (DR3)	K-06 POWER WINDOW REGULATOR LR (DR3)
L/W, Y/W, G/L, R/L, B, *, G/Y, W/R, B/R, G/W, W/Y	G/L, R/L	G/W, B/R, R, *, W/Y, G	R, G	L/W, B/R, R, *, Y/W, L	R, L
K-07 POWER WINDOW SUBSWITCH RR (DR4)	**K-08 POWER WINDOW REGULATOR RR (DR4)**				
G/Y, B/R, W, *, W/R, Y	W, Y				

Connector Locations (626)

HARNESS COLOR FRONT ENGINE REAR

WIRING DIAGRAM Z

K-1

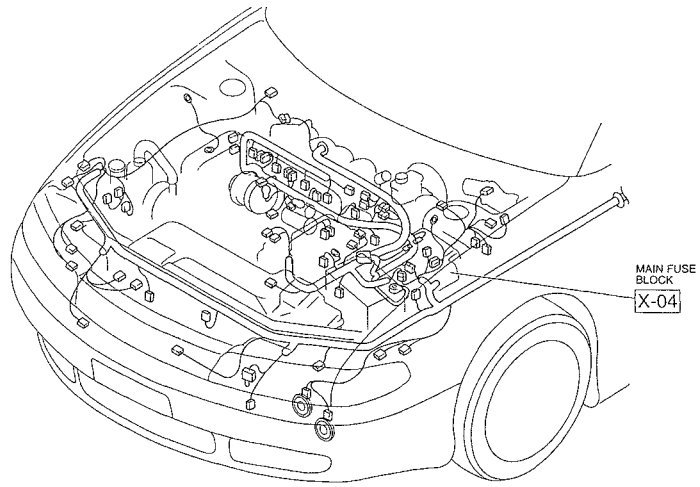

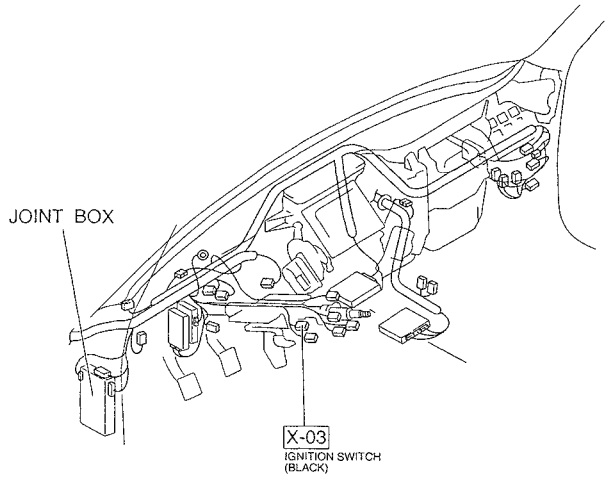

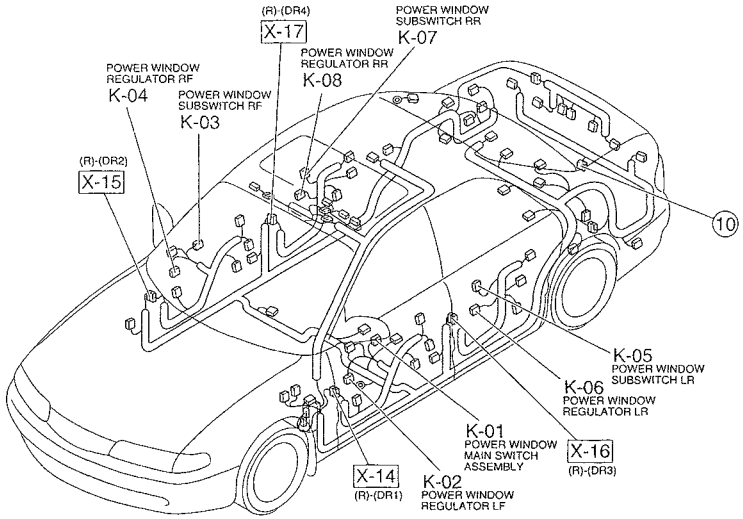

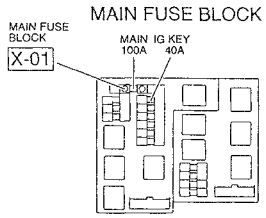

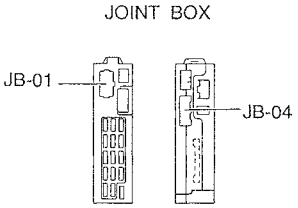

K-2 MX-6 ■ POWER WINDOWS

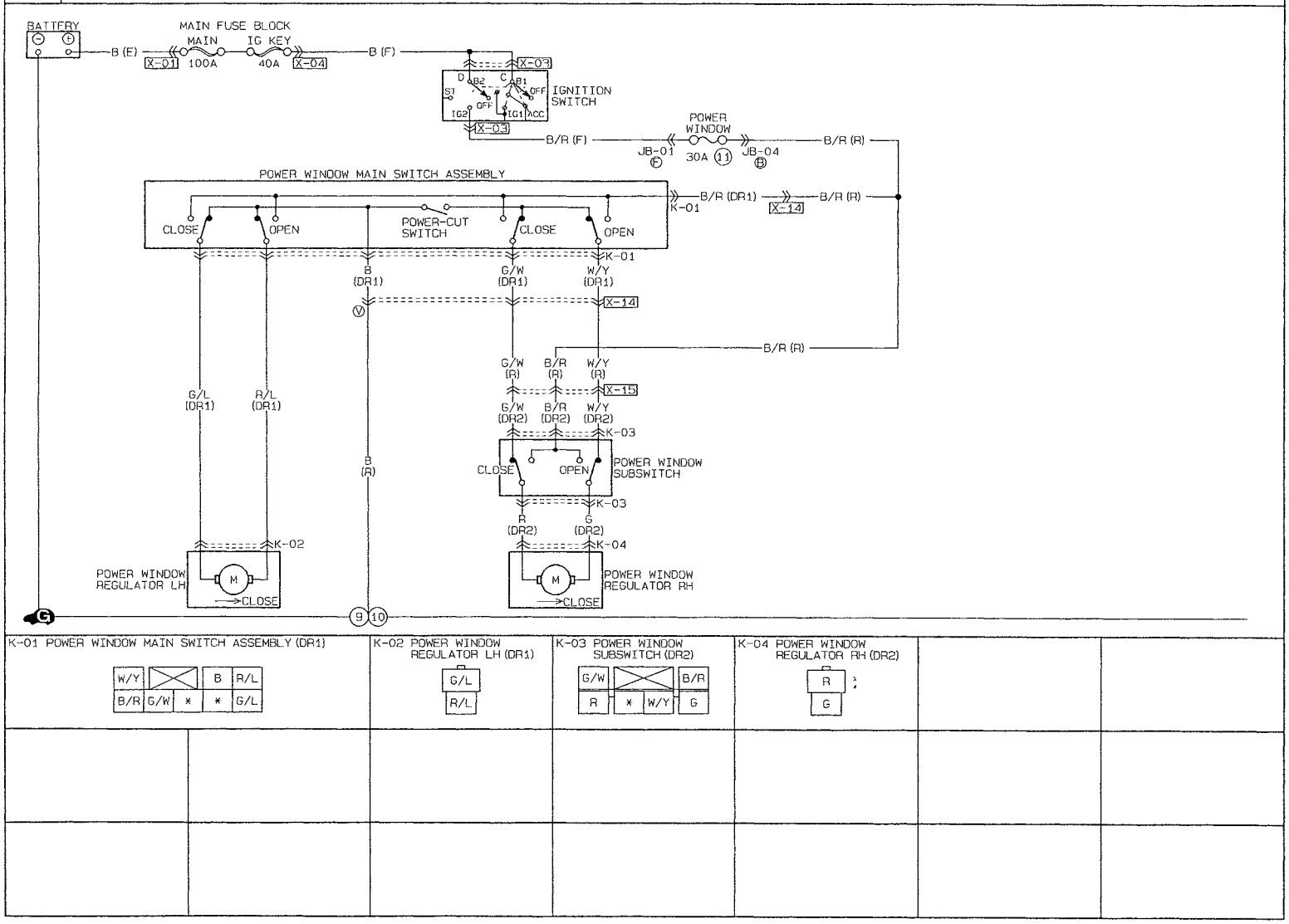

K-01 POWER WINDOW MAIN SWITCH ASSEMBLY (DR1)	K-02 POWER WINDOW REGULATOR LH (DR1)	K-03 POWER WINDOW SUBSWITCH (DR2)	K-04 POWER WINDOW REGULATOR RH (DR2)		
W/Y, B, R/L; B/R, G/W, *, *, G/L	G/L; R/L	G/W, B/R; R, *, W/Y, G	R; G		

Connector Locations (MX-6)

HARNESS COLOR FRONT ENGINE REAR

WIRING DIAGRAM Z

K-2

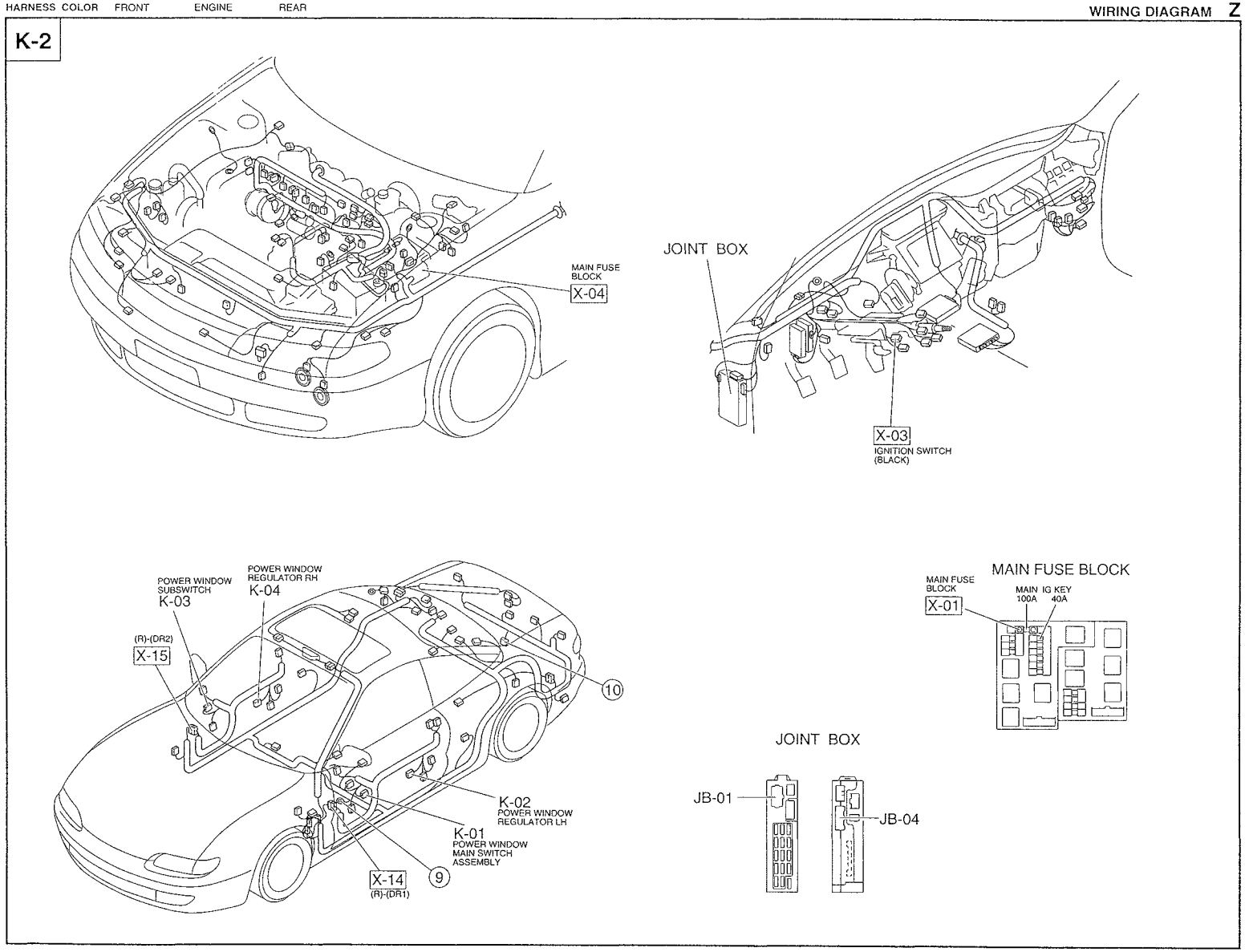

Checklist

	Procedure/Proper operation	Symptom	Flowchart No.
1	Operate power window main switches and verify that power windows at all doors move up/down.	Power windows do not operate	1
		Power window at driver's door does not move	2
		Power windows (except driver's door) do not move by power window main switches	3
		Power window at driver's door does not operate with one-touch operation	4
		Power windows (except driver's door) can be operated by power window main switches when power-cut switch is at OFF	5
2	Operate power window subswitches and verify that each passenger power window moves up/down.	Power windows (except driver's door) can be operated by power window main switches, but cannot be operated by power window subswitches	6
		Power windows (except driver's door) can be operated by power window subswitches when power-cut switch is at OFF	7

Flowchart No. 1	Symptom	Power windows do not operate

Possible case
- Burnt POWER WINDOW 30A fuse
- Damaged power window main switch assembly
- Damaged power window subswitch
- Damaged power window regulator
- Open or short circuit in wiring harness
- Poor connection of connector

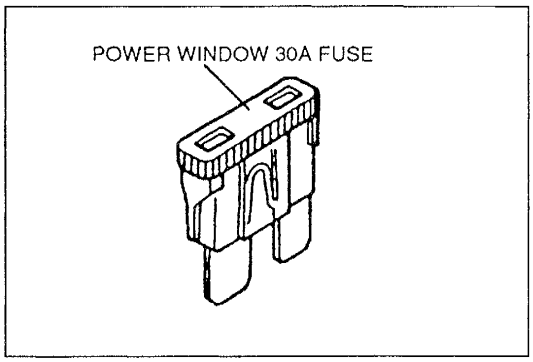

Step 1
Check the POWER WINDOW 30A fuse in the fuse block.

Fuse	Action
OK	Go to Step 2
Burnt	Replace fuse after checking and repairing wiring harness

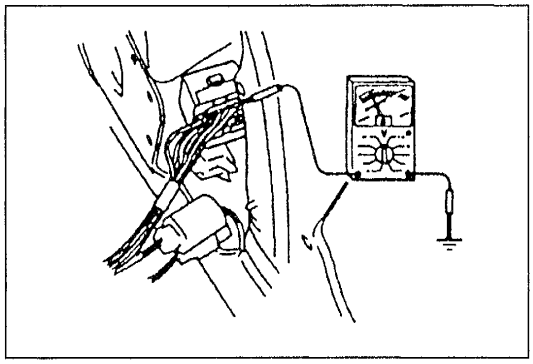

Step 2
1. Remove the driver's door trim.
   (Refer to page K1–19 or K1–21.)
2. Turn the ignition switch to ON.
3. Measure the voltage at the (B/R) terminal wire of the main switch assembly connector.

B+: Battery positive voltage

Voltage	Action
B+	Go to Step 3
Other	Repair wiring harness (Fuse block—Main switch assembly)

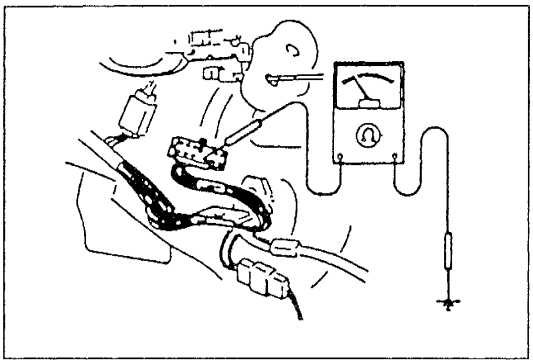

Step 3

1. Turn the ignition switch to OFF.
2. Disconnect the main switch assembly connector.
3. Check for continuity between the (B) terminal wire and ground.

Continuity	Action
Yes	Reconnect connector and go to Step 4
No	Repair wiring harness (Main switch assembly—GND)

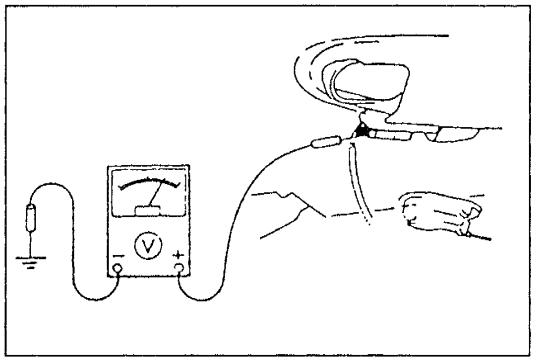

Step 4

1. Turn the ignition switch to ON.
2. Measure the voltage at the terminal wires of the main switch assembly connector with the main switches in the following positions.

B+: Battery positive voltage

Switch position	Terminal	Voltage
CLOSE	(G/L) wire (driver)	B+
	(G/W) wire (passenger)	B+
	((L/W)) wire (left rear)	B+
	((G/Y)) wire (right rear)	B+
OPEN	(R/L) wire (driver)	B+
	(W/Y) wire (passenger)	B+
	((Y/W)) wire (left rear)	B+
	((W/R)) wire (right rear)	B+

(( )): 626

3. If correct, go to Step 5.
4. If not as specified, check the power window main switch assembly. (Refer to page K1–17.)

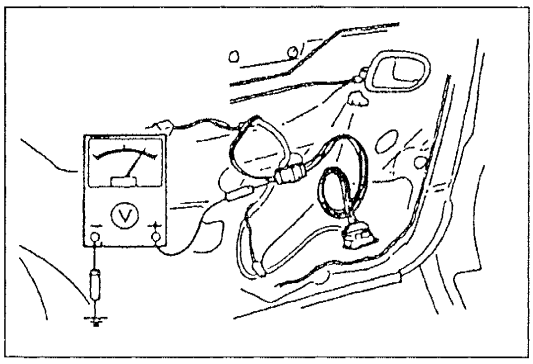

Step 5

1. Remove the passenger's and rear door trim. (Refer to pages K1–19, K1–20, and K1–21.)
2. Measure the voltage at the terminal wires of each sub-switch connector with the main switches in the following positions.

B+: Battery positive voltage

Switch position	Terminal	Voltage
CLOSE	(G/W) wire (passenger)	B+
	((L/W)) wire (left rear)	B+
	((G/Y)) wire (right rear)	B+
OPEN	(W/Y) wire (passenger)	B+
	((Y/W)) wire (left rear)	B+
	((W/R)) wire (right rear)	B+

(( )): 626

3. If correct, go to Step 6.
4. If not as specified, repair the wiring harness (main switch assembly—subswitch).

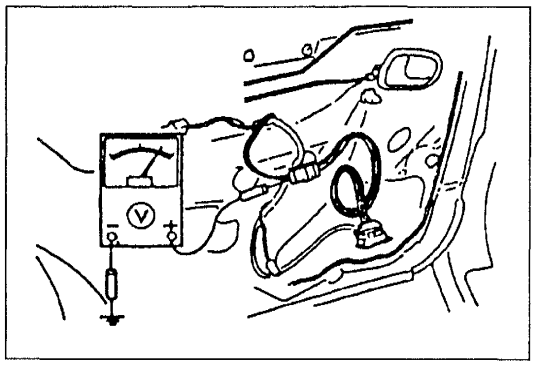

Step 6

1. Measure the voltage at the terminal wires of each subswitch connector with the main switches in the following positions.

B+: Battery positive voltage

Switch position	Terminal	Voltage
CLOSE	(R) wire (passenger)	B+
	((R)) wire (left rear)	B+
	((W)) wire (right rear)	B+
OPEN	(G) wire (passenger)	B+
	((L)) wire (left rear)	B+
	((Y)) wire (right rear)	B+

(( )): 626

2. If correct, go to Step 7.
3. If not as specified, check the power window subswitch. (Refer to page K1–18.)

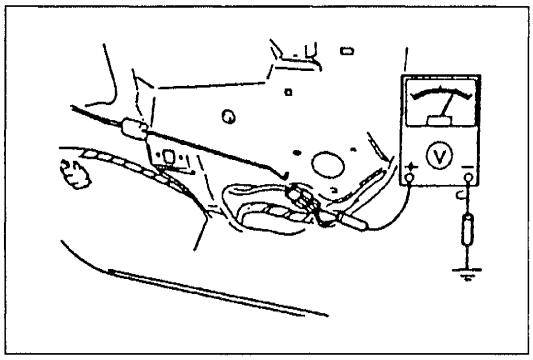

Step 7

1. Remove the door screens. (Refer to page K1–19, 20 and 21.)
2. Measure the voltage at the terminal wires of each regulator connector with the main switches in the following positions.

B+: Battery positive voltage

Switch position	Terminal	Voltage
CLOSE	(G/L) wire (driver)	B+
	(R) wire (passenger)	B+
	((R)) wire (left rear)	B+
	((W)) wire (right rear)	B+
OPEN	(R/L) wire (driver)	B+
	(G) wire (passenger)	B+
	((L)) wire (left rear)	B+
	((Y)) wire (right rear)	B+

(( )): 626

3. If correct, check the power window regulator. (Refer to page K1–18.)
4. If not as specified, repair the wiring harness (main switch assembly or subswitch—regulator).

Flowchart No. 2	Symptom	Power window at driver's door does not move

Possible cause
- Damaged power window main switch assembly
- Damaged power window regulator
- Open or short circuit in wiring harness
- Poor connection of connector

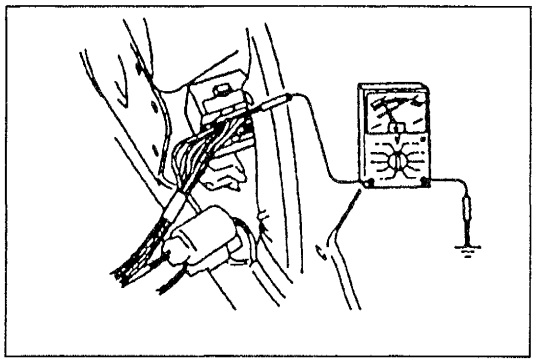

Step 1
1. Remove the driver's door trim.
   (Refer to page K1–19 or K1–21.)
2. Turn the ignition switch to ON.
3. Measure the voltage at the terminal wires of the main switch assembly connector with the driver's main switch in the following positions.

B+: Battery positive voltage

Switch position	Terminal	Voltage
CLOSE	(G/L) wire	B+
OPEN	(R/L) wire	B+

4. If correct, go to Step 2.
5. If not as specified, check the power window main switch assembly.
   (Refer to page K1–17.)

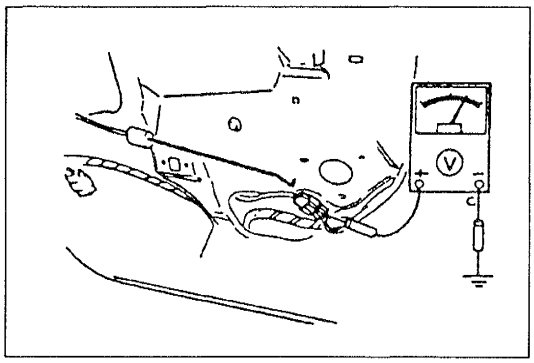

Step 2
1. Remove the driver's door screen.
2. Measure the voltage at the terminal wires of the regulator connector with the driver's main switch in the following positions.

B+: Battery positive voltage

Switch position	Terminal	Voltage
CLOSE	(G/L) wire	B+
OPEN	(R/L) wire	B+

3. If correct, check the power window regulator.
   (Refer to page K1–18.)
4. If not as specified, repair the wiring harness (main switch assembly—regulator).

Flowchart No. 3	Symptom	Power windows (except driver's door) do not move by power window main switches

Possible cause
- Damaged power window main switch assembly
- Damaged power window subswitch
- Damaged power window regulator
- Open or short circuit in wiring harness
- Poor connection of connector

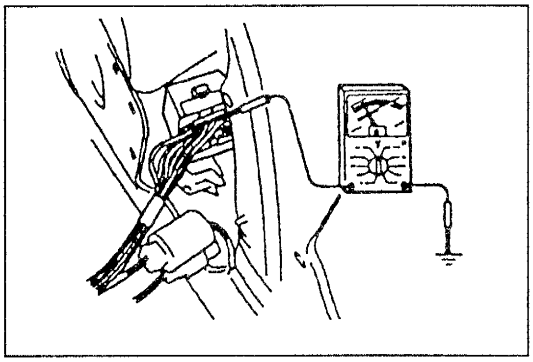

Step 1
1. Remove the driver's door trim.
   (Refer to page K1–19 or K1–21.)
2. Turn the ignition switch to ON.
3. Measure the voltage at the terminal wires of the main switch assembly connector with the main switches in the following positions.

B+: Battery positive voltage

Switch position	Terminal	Voltage
CLOSE	(G/W) wire (passenger)	B+
	((L/W)) wire (left rear)	B+
	((G/Y)) wire (right rear)	B+
OPEN	(W/Y) wire (passenger)	B+
	((Y/W)) wire (left rear)	B+
	((W/R)) wire (right rear)	B+

(( )): 626

4. If correct, go to Step 2.
5. If not as specified, check the power window main switch assembly.
   (Refer to page K1–17.)

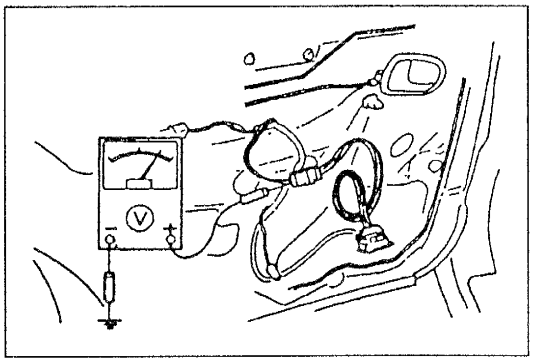

Step 2
1. Remove the passenger's and rear door trim.
   (Refer to pages K1–19, K1–20, and K1–21.)
2. Measure the voltage at the terminal wires of each sub-switch connector with the main switches in the following positions.

B+: Battery positive voltage

Switch position	Terminal	Voltage
CLOSE	(G/W) wire (passenger)	B+
	((L/W)) wire (left rear)	B+
	((G/Y)) wire (right rear)	B+
OPEN	(W/Y) wire (passenger)	B+
	((Y/W)) wire (left rear)	B+
	((W/R)) wire (right rear)	B+

(( )): 626

3. If correct, go to Step 3.
4. If not as specified, repair the wiring harness (main switch assembly—subswitch).

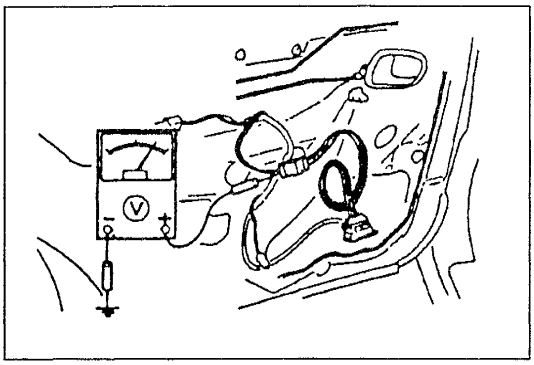

Step 3

1. Measure the voltage at the terminal wires of each subswitch connector with the main switches in the following positions.

B+: Battery positive voltage

Switch position	Terminal	Voltage
CLOSE	(R) wire (passenger)	B+
	((R)) wire (left rear)	B+
	((W)) wire (right rear)	B+
OPEN	(G) wire (passenger)	B+
	((L)) wire (left rear)	B+
	((Y)) wire (right rear)	B+

(( )): 626

2. If correct, go to Step 4.
3. If not as specified, check the power window subswitch. (Refer to page K1–18.)

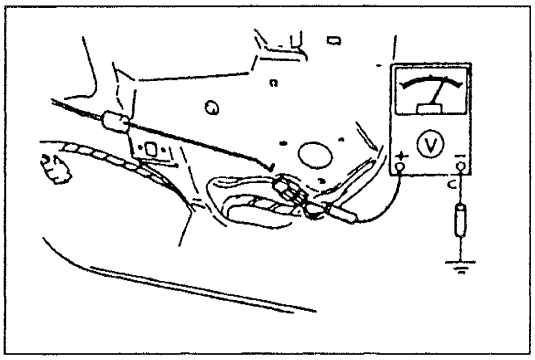

Step 4

1. Measure the voltage at the terminal wires of each regulator connector with the main switches in the following positions.

B+: Battery positive voltage

Switch position	Terminal	Voltage
CLOSE	(R) wire (passenger)	B+
	((R)) wire (left rear)	B+
	((W)) wire (right rear)	B+
OPEN	(G) wire (passenger)	B+
	((L)) wire (left rear)	B+
	((Y)) wire (right rear)	B+

(( )): 626

2. If correct, check the power window regulator. (Refer to page K1–18.)
3. If not as specified, repair the wiring harness (subswitch—regulator).

Flowchart No. 4	Symptom	Power window at driver's door does not operate with one-touch operation

Possible cause

- Damaged power window main switch assembly

Remedy

Check the power window main switch assembly. (Refer to page K1–17.)

Flowchart No. 5	Symptom	Power windows (except driver's door) can be operated by power window main switches when power-cut switch is at OFF

Possible cause
- Damaged power-cut switch

Remedy
Check the power-cut switch. (Refer to page K1–17.)

Flowchart No. 6	Symptom	Power windows (except driver's door) can be operated by power window main switches, but cannot be operated by power window subswitches

Possible cause
- Damaged power window subswitch
- Open or short circuit wiring harness
- Poor connection of connector

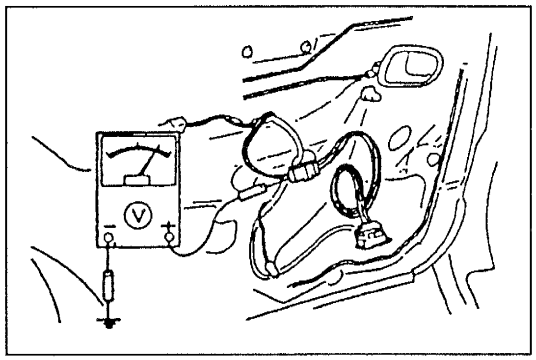

Remedy
1. Remove the passenger's and rear door trim. (Refer to pages K1–19, K1–20, and K1–21.)
2. Turn the ignition switch to ON.
3. Measure the voltage at the (B/R) terminal wire of each subswitch connector.

B+: Battery positive voltage

Voltage	Action
B+	Check power window subswitch (Refer to page K1–18)
Other	Repair wiring harness (Fuse block—Subswitch)

Flowchart No. 7	Symptom	Power windows (except driver's door) can be operated by power window subswitches when power-cut switch is at OFF

Possible cause
- Damaged power-cut switch

Remedy
Check the power-cut switch. (Refer to page K1–17.)

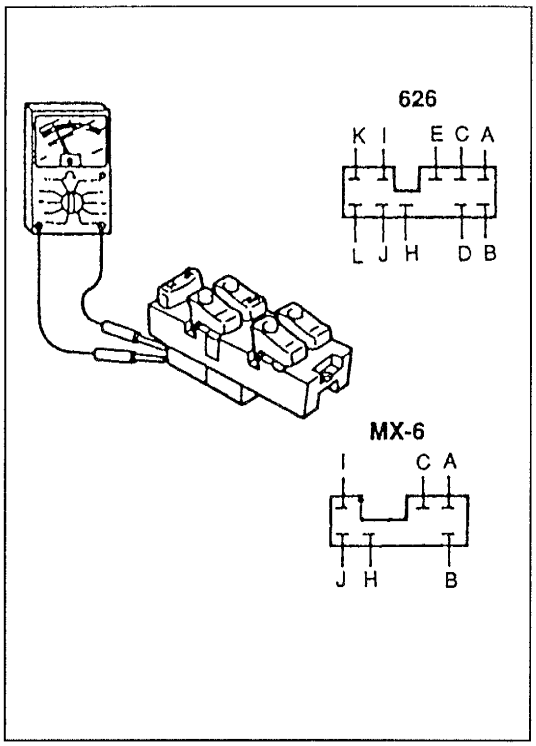

POWER WINDOW MAIN SWITCH ASSEMBLY

Inspection

Main switches

1. Remove the main switch assembly from the driver's door trim. (Refer to page K1–19 or K1–21.)
2. Make sure the power-cut switch is at ON.
3. Check for continuity between the main switch assembly terminals with the main switches in the following positions.

626

○–○ : Continuity

Switch position \ Terminal		Driver				Passen-ger				Right rear				Left rear			
		A	H	J	L	A	B	D	H	A	C	E	H	A	H	I	K
UP		○	○	○	○	○	○	○	○	○	○	○	○	○	○	○	○
DOWN		○	○	○	○	○	○	○	○	○	○	○	○	○	○	○	○
One-touch	DOWN	○	○	○	○												
OFF			○	○	○		○	○	○		○	○	○		○	○	○

MX–6

○–○ : Continuity

Switch position \ Terminal		Driver				Passenger			
		A	B	C	J	C	H	I	J
UP		○	○	○	○	○	○	○	○
DOWN		○	○	○	○	○	○	○	○
One-touch	DOWN	○	○	○	○				
OFF		○	○	○		○	○	○	

4. If not as specified, replace the power window main switch assembly.

Power-cut switch

1. Remove the main switch assembly from the driver's door trim. (Refer to page K1–19 or K1–21.)
2. Check for continuity between the main switch assembly terminals with the power-cut switch in the following positions.

626

○–○ : Continuity

Switch position \ Terminal	Passenger			Right rear			Left rear		
	B	D	H	C	E	H	I	H	K
ON	○	○	○	○	○	○	○	○	○
OFF	○	○		○	○		○	○	

MX-6

O–O : Continuity

Switch / Terminal / Switch position	Passenger		
	C	H	I
ON	O	O	O
OFF		O	O

3. If not as specified, replace the power window main switch assembly.

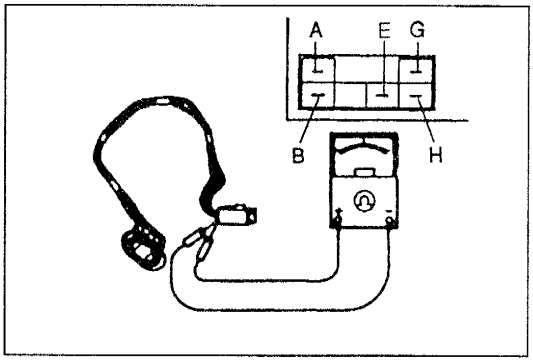

POWER WINDOW SUBSWITCH

Inspection

1. Remove the power window subswitch from the passenger's and rear door trim.
   (Refer to pages K1–19, K1–20, and K1–21.)
2. Check for continuity between the subswitch terminals.

O–O : Continuity

Switch / Terminal / Switch position	Passenger					Left rear					Right rear				
	G	H	E	A	B	G	H	E	A	B	G	H	E	A	B
UP	O				O	O				O	O				O
		O	O				O	O				O	O		
OFF		O	O				O	O				O	O		
				O	O				O	O				O	O
DOWN	O	O				O	O				O	O			
				O	O				O	O				O	O

3. If not as specified, replace the power window subswitch.

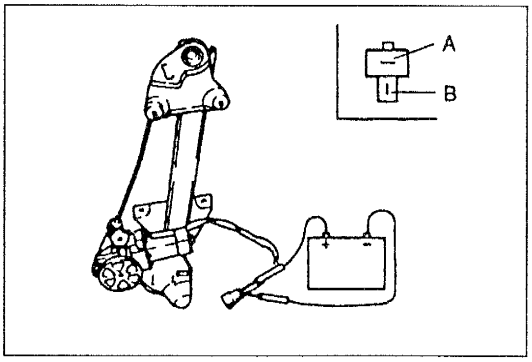

POWER WINDOW REGULATOR

Inspection

1. Disconnect the regulator connector.
2. Apply battery positive voltage and check the operation of the motor as indicated below.

B+: Battery positive voltage

Connection		Motor operation
B+	GND	
A	B	UP
B	A	DOWN

3. If not as specified, replace the power window regulator.

COMPONENTS

Removal / Installation

1. Raise the rear edge of the door glass about **80 mm {3.2 in}** from the fully lowered position.
2. Disconnect the negative battery cable.

Note

- Remove the door screen carefully so that it may be reused.

3. Remove in the order shown in the figure. (Refer to the 1996 626/MX-6 Workshop Manual, section S, when removing the front door trim.)
4. Install in the reverse order of removal.

626 (FRONT DOOR)

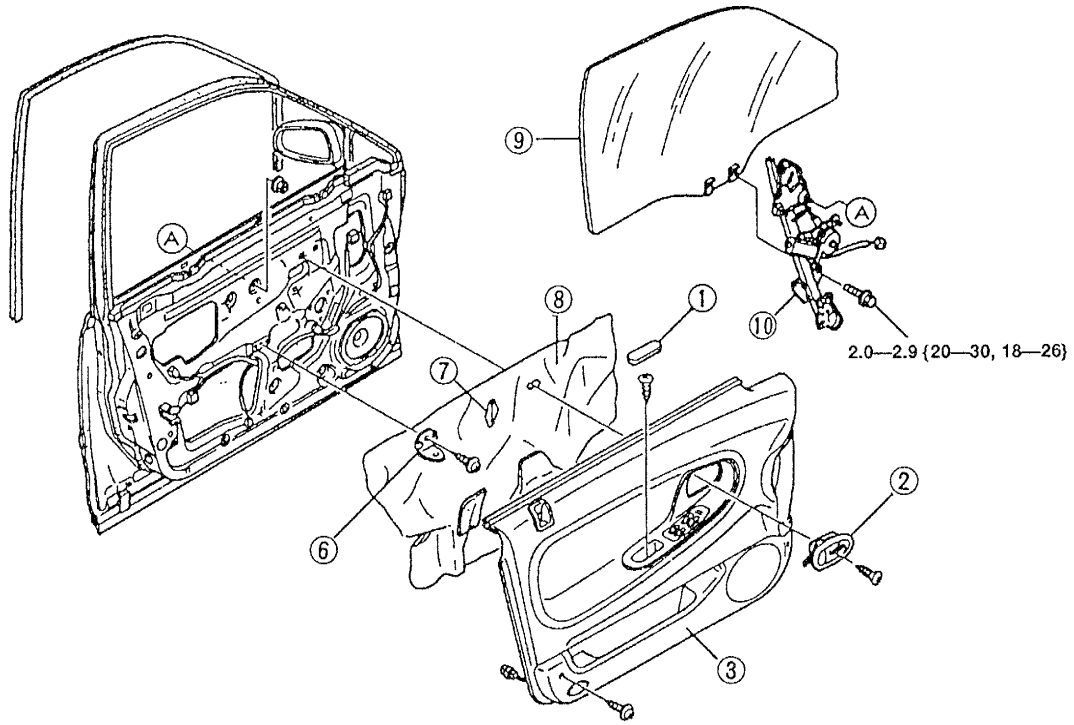

DRIVER'S DOOR

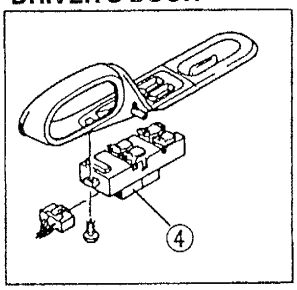

PASSENGER'S DOOR

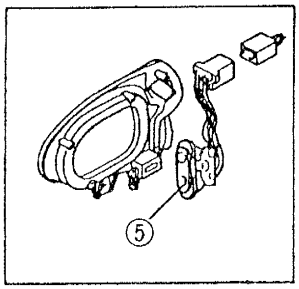

N·m {kgf·cm, in·lbf}

1. Recess cover
2. Inner handle
3. Front door trim
4. Power window main switch assembly
   Inspection..... page K1–17
5. Power window subswitch
   Inspection..... page K1–18
6. Bracket
7. Sealing pad
8. Door screen
9. Front door glass
10. Power window regulator
    Inspection..... page K1–18

Removal / Installation

1. Raise the rear edge of door glass about **50 mm {2.0 in}** from the fully lowered position.
2. Disconnect the negative battery cable.

Note

- Remove the door screen carefully so that it may be reused.

3. Remove in the order shown in the figure. (Refer to the 1996 626/MX-6 Workshop Manual, section S, when removing the rear door trim.)
4. Install in the reverse order of removal.

626 (REAR DOOR)

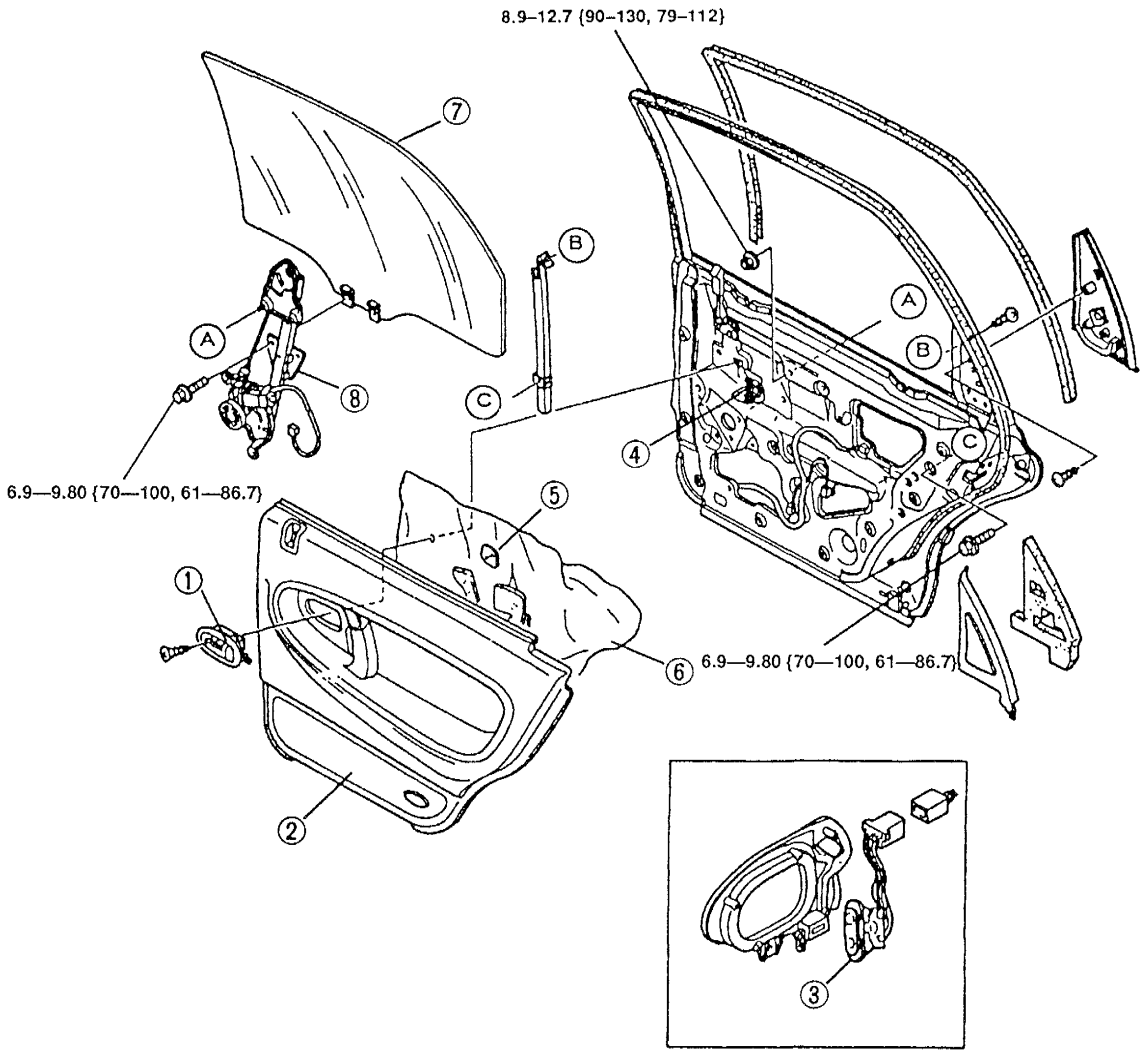

1. Inner handle
2. Rear door trim
3. Power window subswitch
   Inspection ..... page K1–18
4. Bracket
5. Sealing pad
6. Door screen
7. Rear door glass
8. Power window regulator
   Inspection ..... page K1–18

Removal / Installation

1. Raise the rear edge of the door glass about **100 mm {3.9 in}** from the fully lowered position.
2. Disconnect the negative battery cable.

Note

- Remove the door screen carefully so that it may be reused.
- Mark around the upper glass stopper mounting bolts with paint before removing them.

3. Remove in the order shown in the figure. (Refer to the 1996 626/MX-6 Workshop Manual, section S, when removing the door trim.)
4. Install in the reverse order of removal.

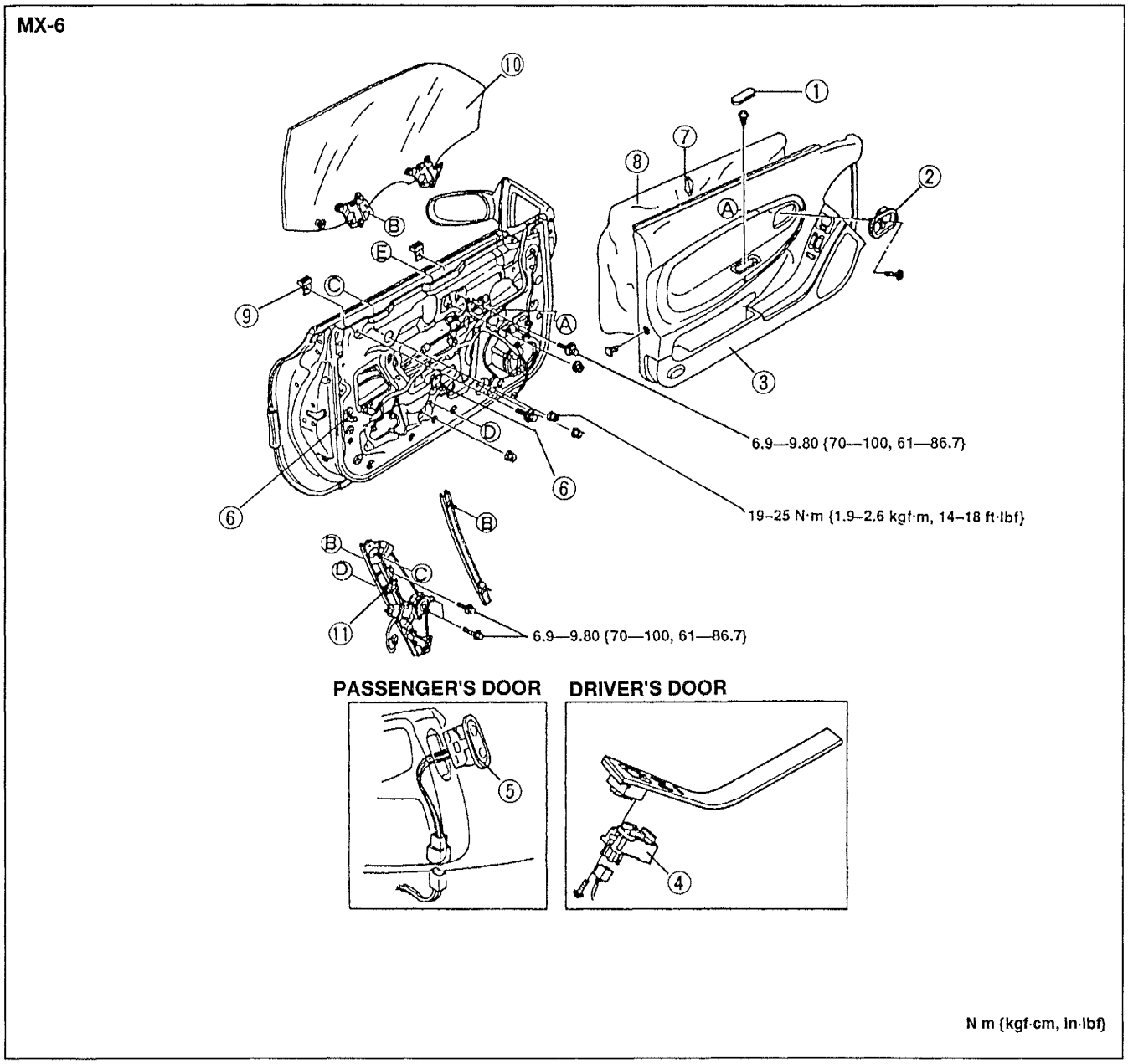

1. Recess cover
2. Inner handle cover
3. Door trim
4. Power window main switch assembly
   Inspection ..... page K1–17
5. Power window subswitch
   Inspection ..... page K1–18
6. Bracket
7. Sealing pad
8. Door screen
9. Upper glass stopper
10. Door glass
11. Power window regulator
    Inspection ..... page K1–18

Before beginning any service procedure, refer to section S of this manual for air bag system service warnings.

POWER DOOR LOCK SYSTEM

POWER DOOR LOCK SYSTEM

STRUCTURAL VIEW

626

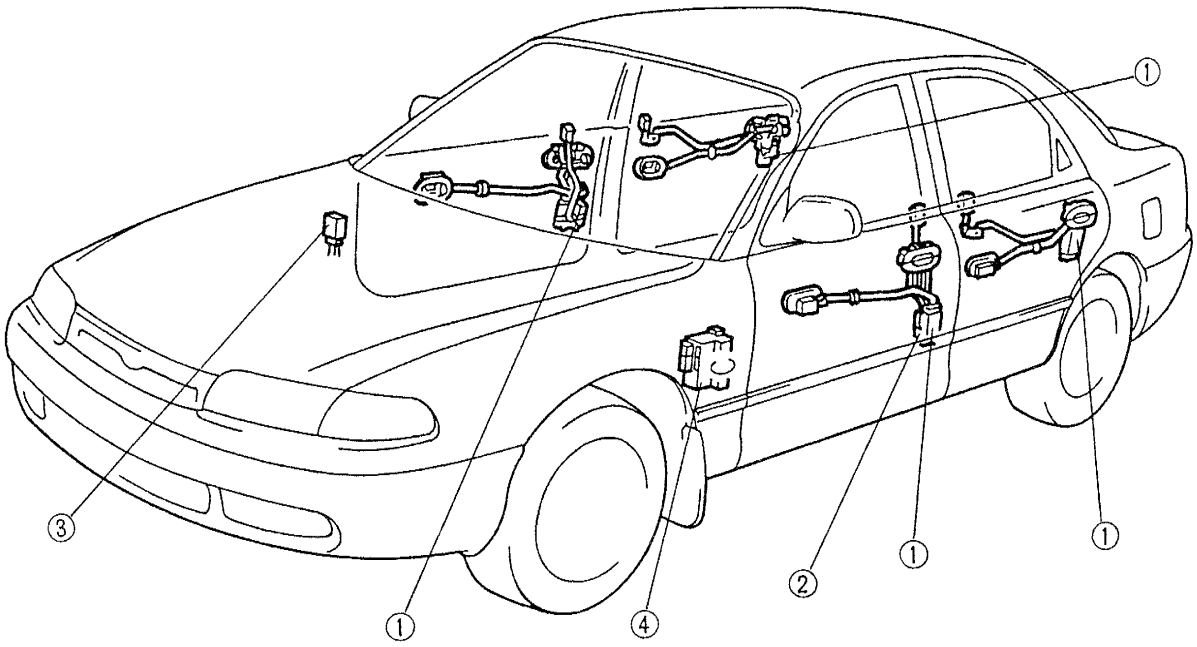

1. Door lock actuator (within door lock)
   Inspection ..... page K2–18
   Removal / Installation
   (front) ..... page K2–19
   (rear) ..... page K2–20
2. Door lock-link switch (within driver's door lock)
   Inspection ..... page K2–18
   Removal / Installation ..... page K2–19
3. Door lock timer unit
   Inspection .....page K2–17
4. CPU
   Removal / Installation .....section Z3

MX-6

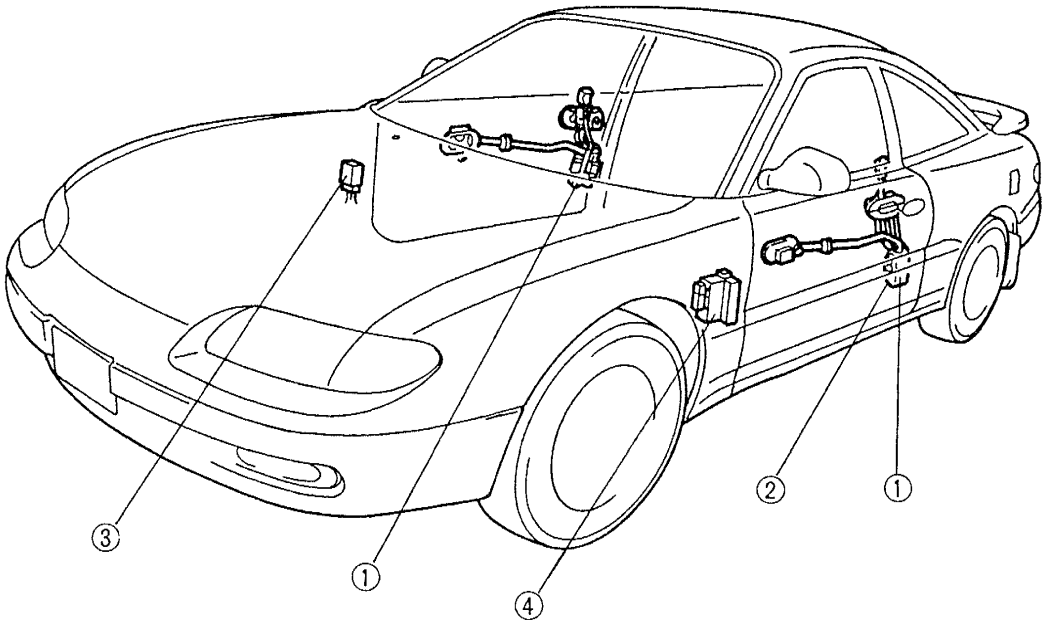

1. Door lock actuator (within door lock)
   Inspection ..... page K2–18
   Removal / Installation .....page K2–21
2. Door lock-link switch (within door lock)
   Inspection ..... page K2–18
   Removal / Installation ..... page K2–21
3. Door lock timer unit
   Inspection ..... page K2–17
4. CPU
   Removal / Installation .....section Z3

SYSTEM DIAGRAM

WITH KEYLESS ENTRY SYSTEM

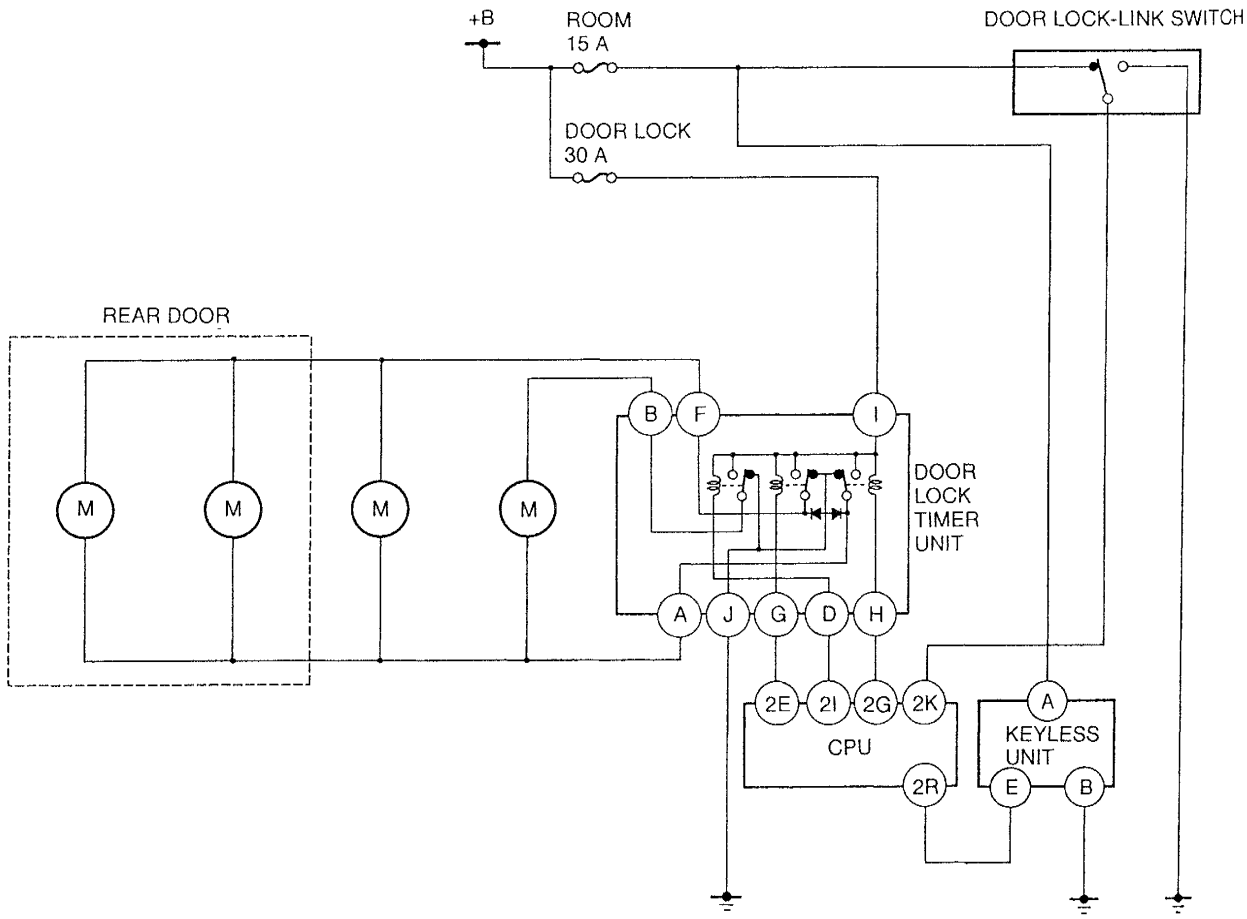

M: DOOR LOCK ACTUATOR

System Operation
Power door lock system

Operation		Passenger's door	Rear door (626)
Driver's side	Lock knob operation	Lock → Unlock	Lock → Unlock
		Unlock → Lock	Unlock → Lock
	Key operation	Lock → Unlock	Lock → Unlock

WITHOUT KEYLESS ENTRY SYSTEM

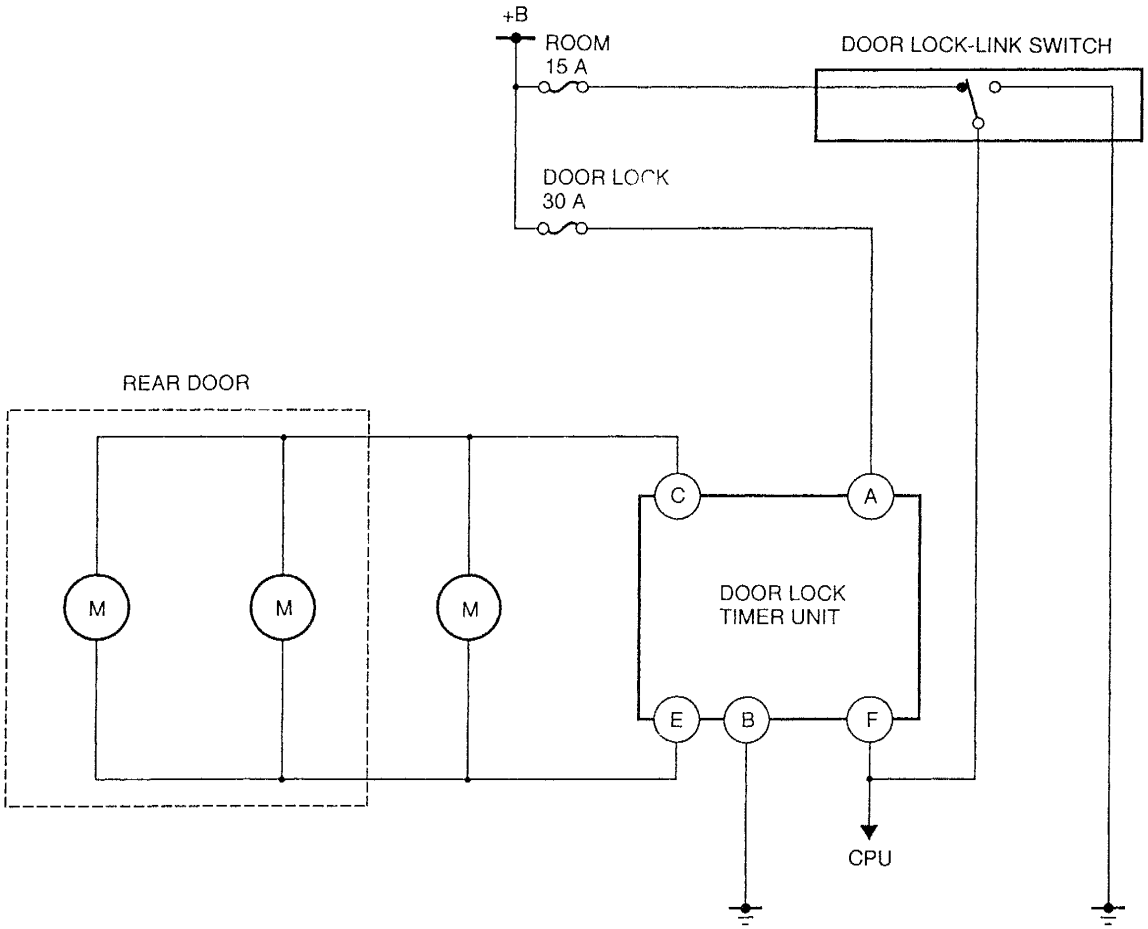

M: DOOR LOCK ACTUATOR

System Operation
Power door lock system

Operation		Passenger's door	Rear door (626)
Driver's side	Lock knob operation	Lock → Unlock	Lock → Unlock
		Unlock → Lock	Unlock → Lock
	Key operation	Lock → Unlock	Lock → Unlock

TROUBLESHOOTING
Circuit Diagram (626)

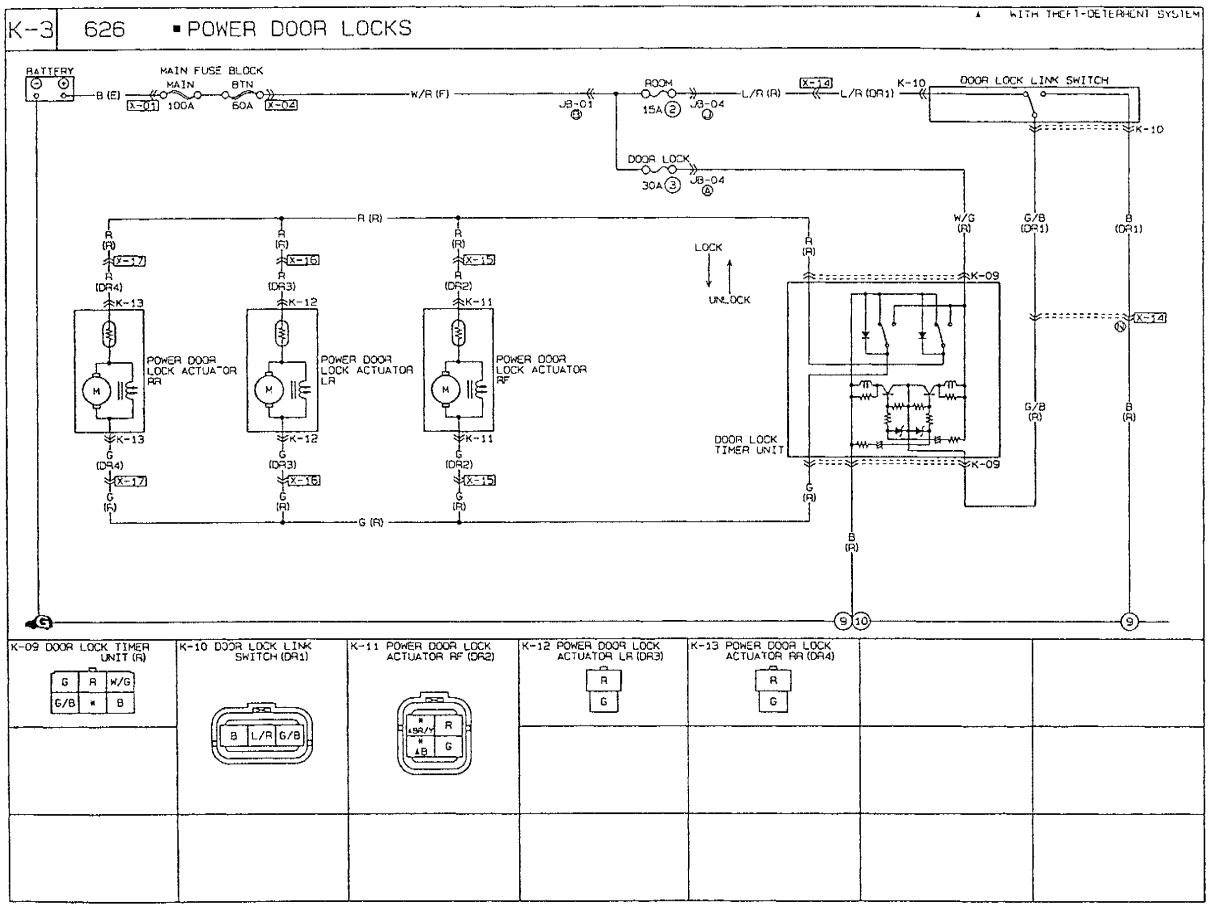

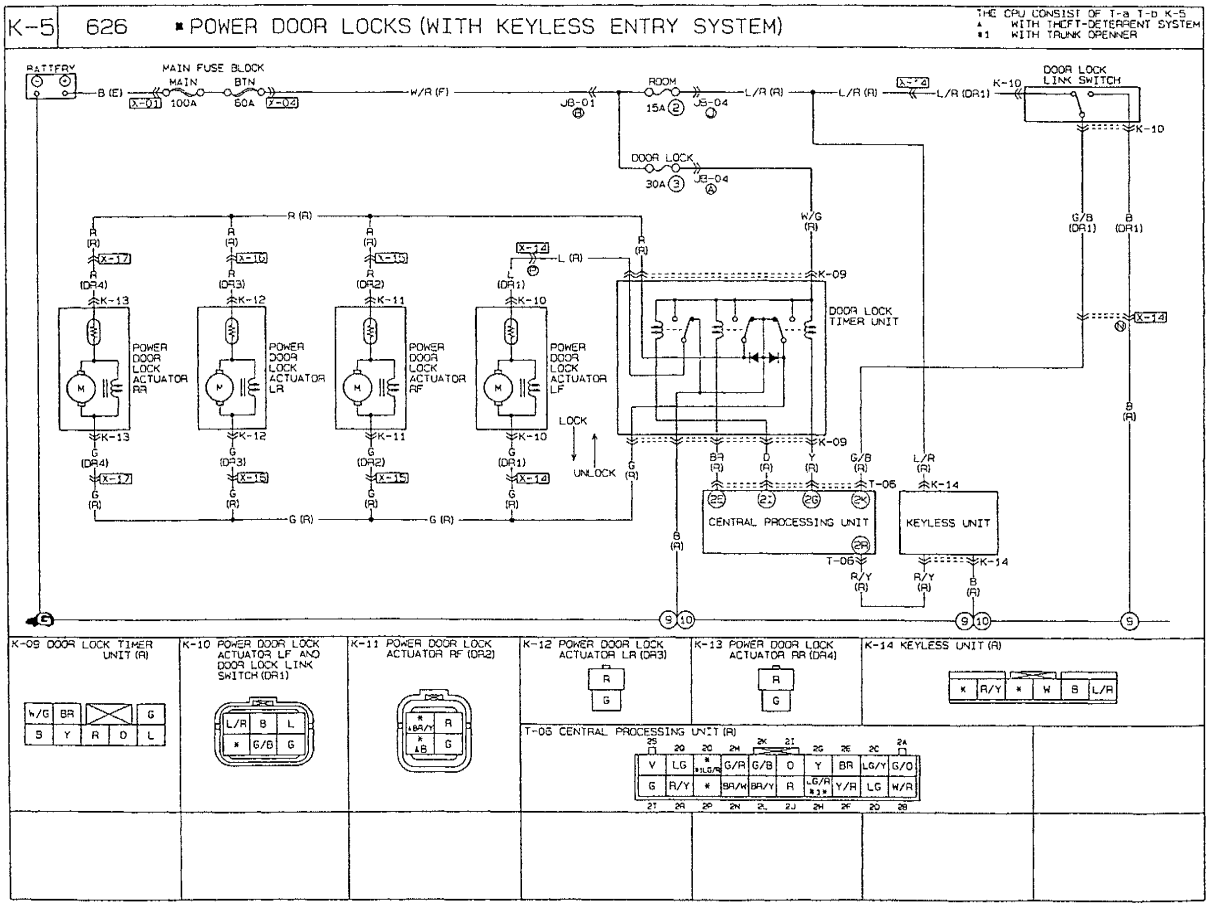

Connector Locations (626)

WITHOUT KEYLESS ENTRY SYSTEM

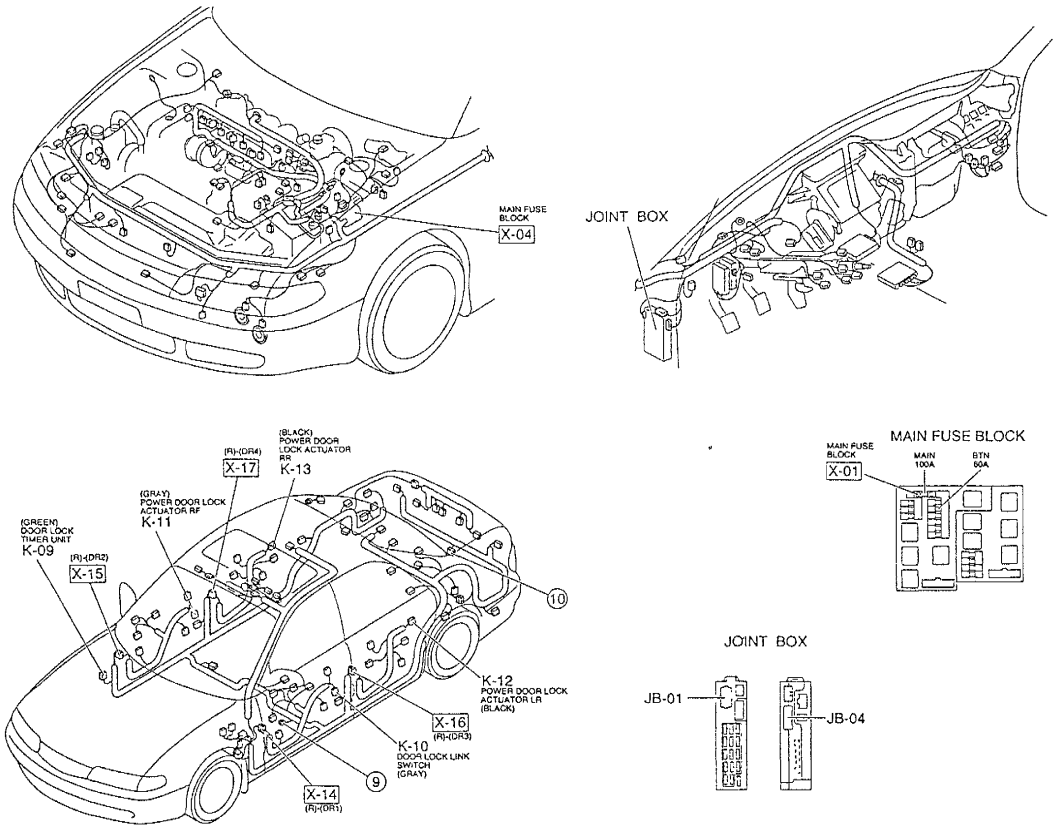

WITH KEYLESS ENTRY SYSTEM

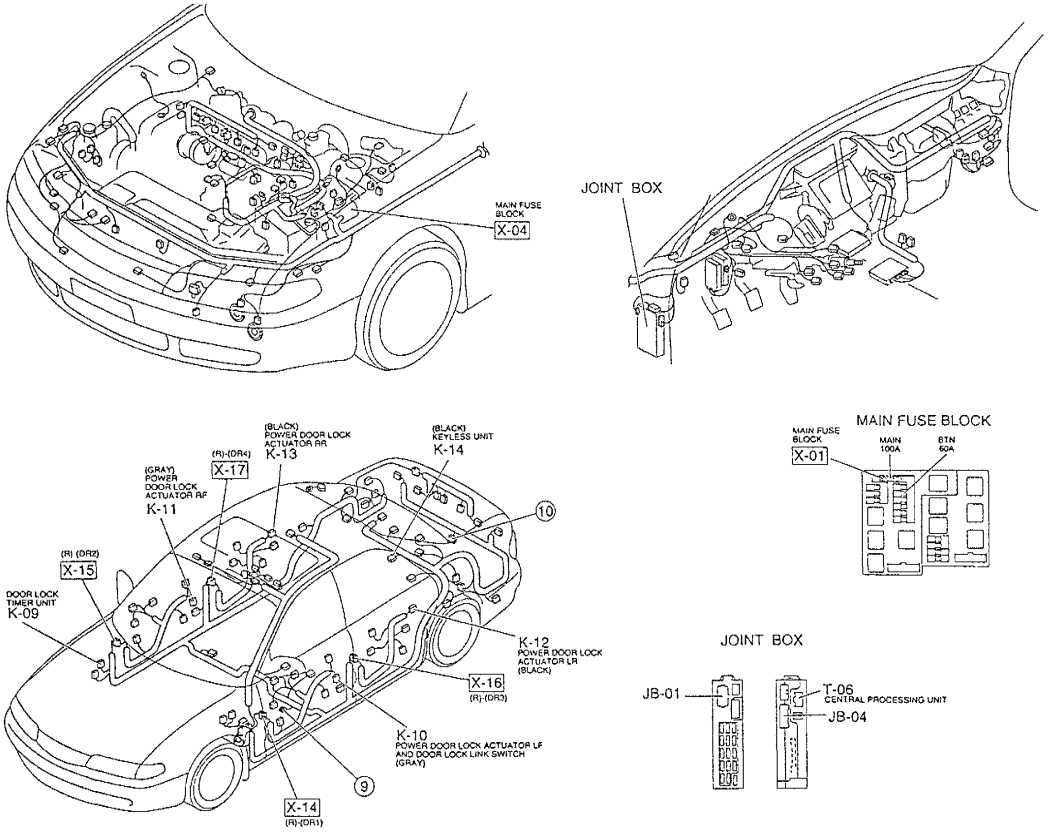

Circuit Diagram (MX-6)

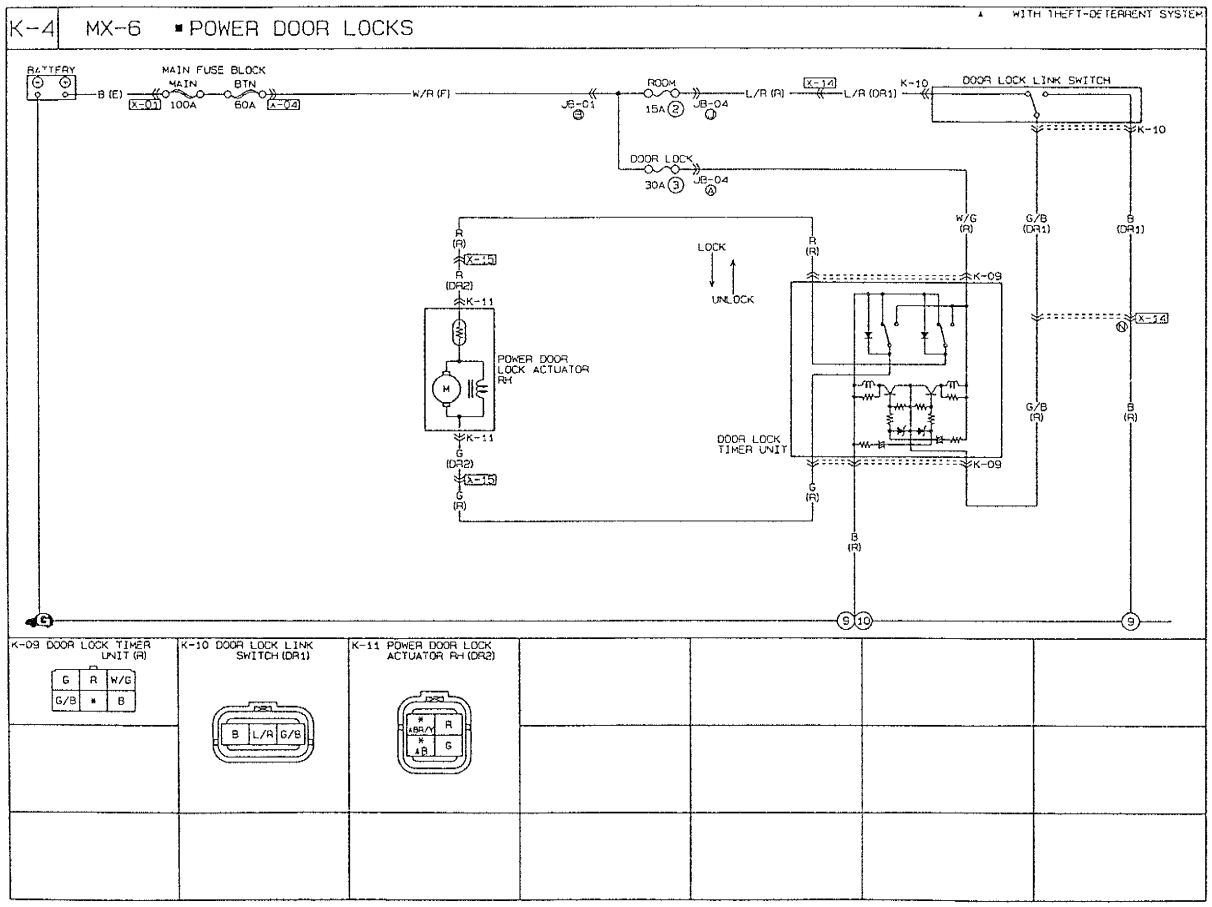

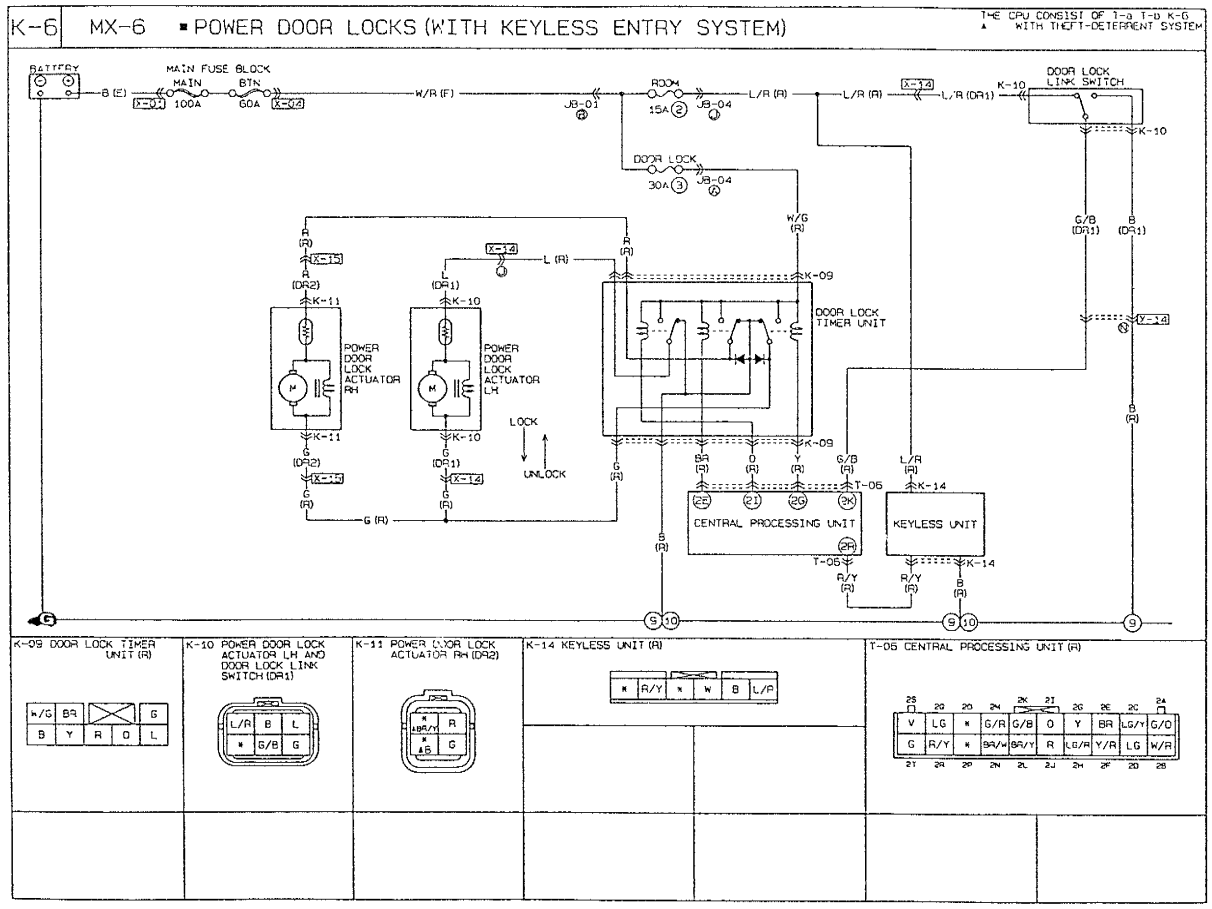

Connector Locations (MX-6)

WITHOUT KEYLESS ENTRY SYSTEM

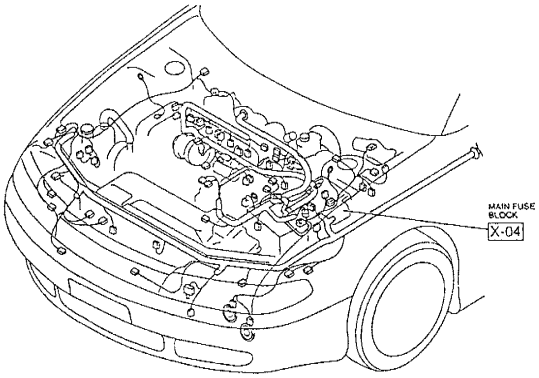

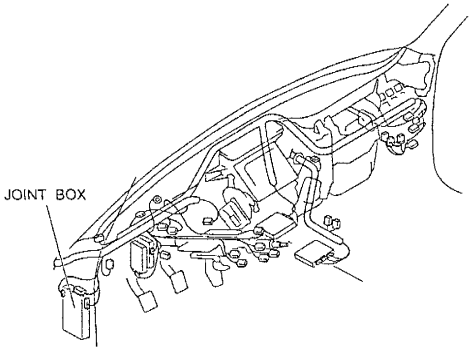

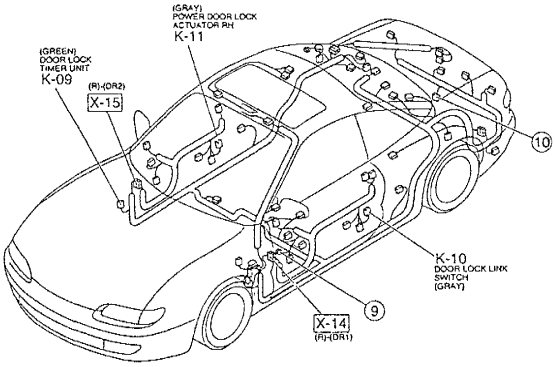

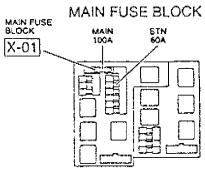

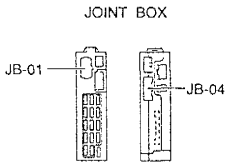

WITH KEYLESS ENTRY SYSTEM

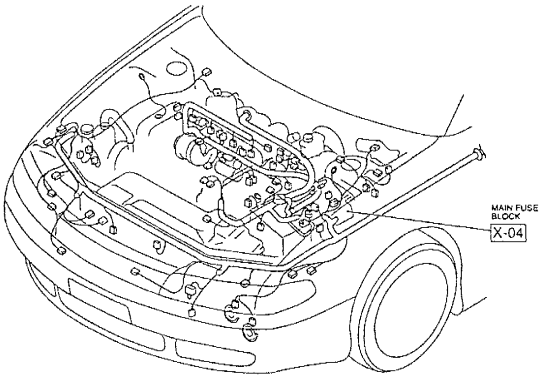

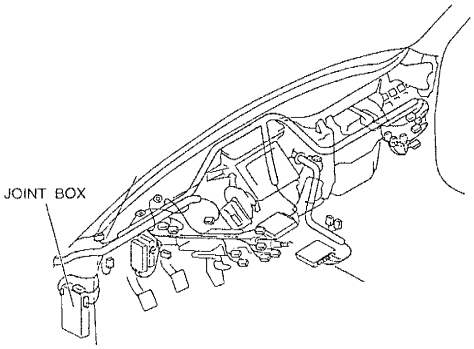

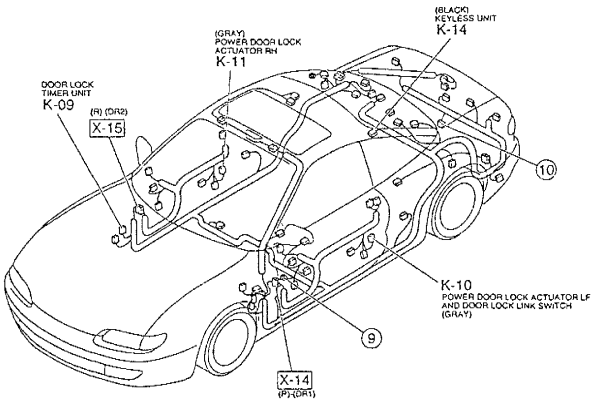

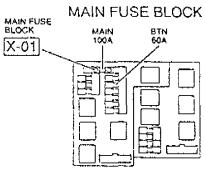

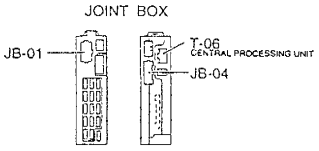

Checklist

	Procedure/Proper operation	Symptom	Flowchart No.
	Press lock knob on driver's door and verify that all doors lock. Pull lock knob on driver's door and verify that all doors unlock.	Power door lock system does not function (without keyless entry system)	1
		Power door lock system does not function (with keyless entry system)	2
		Power door lock system at specific door does not function (without keyless entry system)	3
		Power door lock system at specific door does not function (with keyless entry system)	4

Flowchart No.1	Symptom	Power door lock system does not function (without keyless entry system)

Possible cause
- Burnt DOOR LOCK 30A fuse
- Burnt ROOM 15A fuse
- Damaged door lock timer unit
- Damaged door lock-link switch
- Damaged door lock actuator
- Open or short circuit in wiring harness
- Poor connection of connector

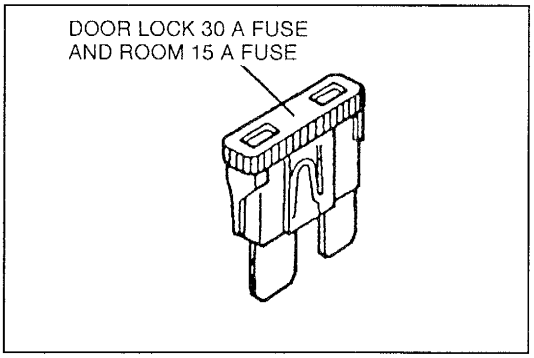

Step 1
Check the DOOR LOCK 30A fuse and ROOM 15A fuse in the fuse block.

Fuse	Action
OK	Go to Step 2
Burnt	Replace fuse after checking and repairing wiring harness

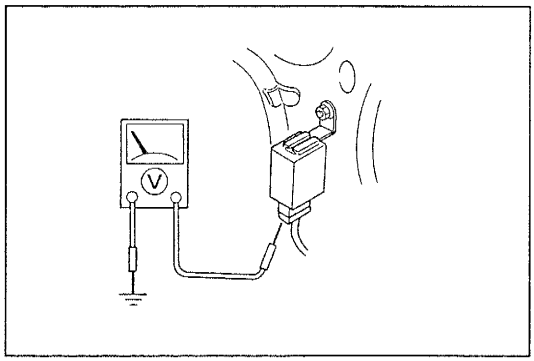

Step 2
1. Remove the passenger's front side trim.
2. Measure the voltage at the (W/G) terminal wire of the door lock timer unit connector.

B+: Battery positive voltage

Voltage	Action
B+	Go to Step 3
Other	Repair wiring harness (Fuse block—Door lock timer unit)

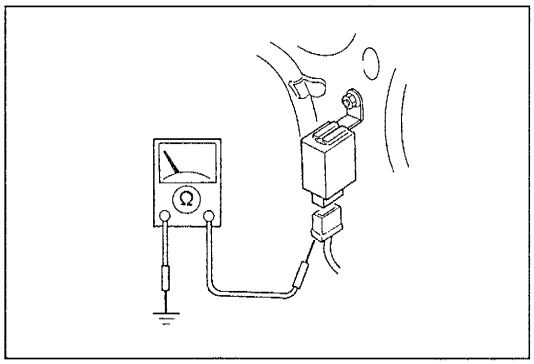

Step 3
1. Disconnect the door lock timer unit connector.
2. Check for continuity between the (B) terminal wire and ground.

Continuity	Action
Yes	Go to Step 4
No	Repair wiring harness (Door lock timer unit—GND)

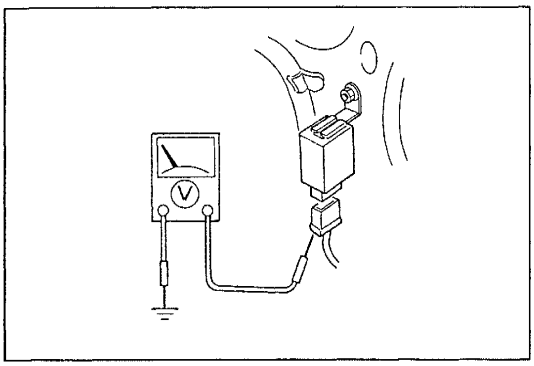

Step 4

1. Measure the voltage between the (G/B) terminal wire and ground with the driver's door lock knob in the following positions.

B+: Battery positive voltage

Knob position	Terminal	Voltage
Lock	(G/B) wire	B+
Unlock	(G/B) wire	0V

2. If correct, go to Step 5.
3. If not as specified, go to Step 8.

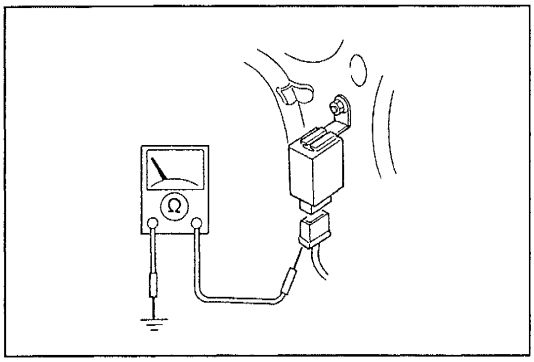

Step 5

1. Disconnect the negative battery cable.
2. Check for continuity between the (G/B) terminal wire and ground with the driver's door lock knob in the unlock position.

Continuity	Action
Yes	Reconnect connector and battery cable and go to Step 6
No	Reconnect connector and battery cable and go to Step 9

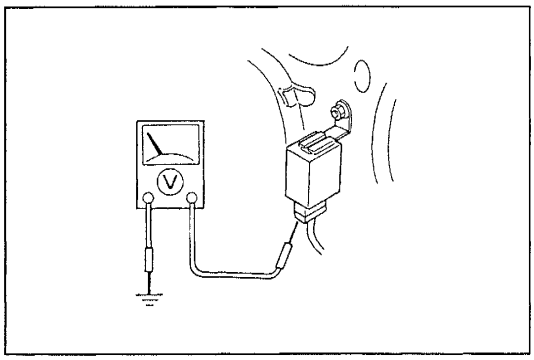

Step 6

1. Measure the voltage at the terminal wires of the door lock timer unit connector with the driver's door lock in the following positions.

B+: Battery positive voltage

Knob position	Terminal	Voltage
Lock	(R) wire	B+
Unlock	(G) wire	B+

2. If correct, go to Step 7.
3. If not as specified, check the door lock timer unit. (Refer to page K2–16.)

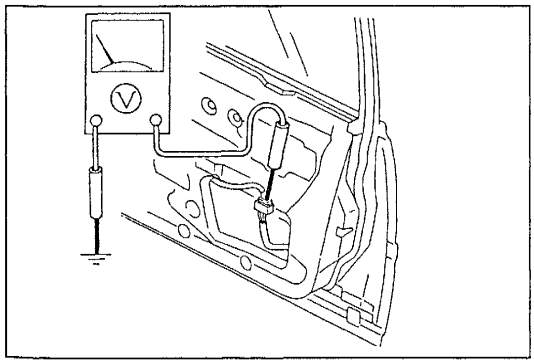

Step 7

1. Remove the passenger's/rear door trim and door screens. (Refer to pages K2–19, K2–20, and K2–21.)
2. Measure the voltage at the terminal wires of the door lock actuator connectors with the driver's door lock knob in the following positions.

B+: Battery positive voltage

Knob position	Terminal	Voltage
Lock	(R) wire	B+
Unlock	(G) wire	B+

3. If correct, check the door lock actuators. (Refer to page K2–18.)
4. If not as specified, repair the wiring harness (door lock timer unit—door lock actuator).

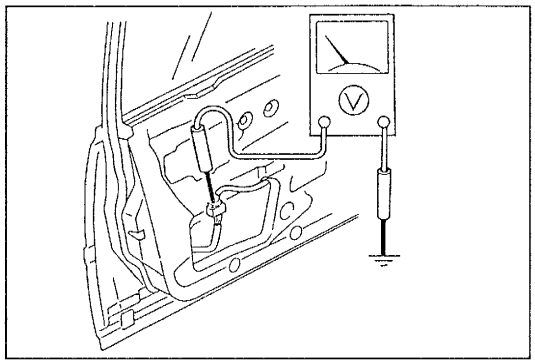

Step 8

1. Remove the driver's door trim and door screen. (Refer to page K2–19 or K2–21.)
2. Measure the voltage at the (G/B) terminal wire of the door lock-link switch connector with the driver's door lock knob in the following positions.

B+: Battery positive voltage

Knob position	Terminal	Voltage
Lock	(G/B) wire	B+
Unlock	(G/B) wire	0V

3. If correct, repair the wiring harness (door lock timer unit—door lock-link switch).
4. If not as specified, go to Step 9.

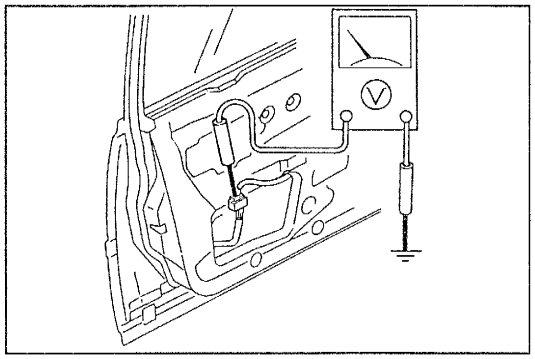

Step 9

Measure the voltage at the (L/R) terminal wire of the door lock-link switch connector.

B+: Battery positive voltage

Voltage	Action
B+	Go to Step 10
Other	Repair wiring harness (Fuse block—Door lock-link switch)

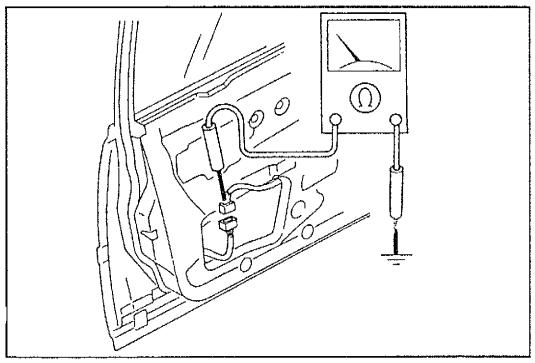

Step 10

1. Disconnect the door lock-link switch connector.
2. Check for continuity between the (B) terminal wire and ground.

Continuity	Action
Yes	Check door lock-link switch (Refer to page K2–18)
No	Repair wiring harness (Door lock-link switch—GND)

Flowchart No. 2	Symptom	Power door lock system does not function (with keyless entry system)

Possible cause

- Burnt DOOR LOCK 30A fuse
- Burnt ROOM 15A fuse
- Damaged door lock timer unit
- Damaged door lock-link switch
- Damaged door lock actuator
- Damaged CPU
- Open or short circuit in wiring harness
- Poor connection of connector

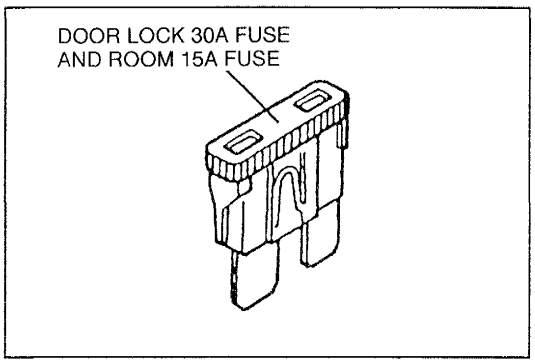

Step 1

Check the DOOR LOCK 30A fuse and ROOM 15A fuse in the fuse block.

Fuse	Action
OK	Go to Step 2
Burnt	Replace fuse after checking and repairing wiring harness

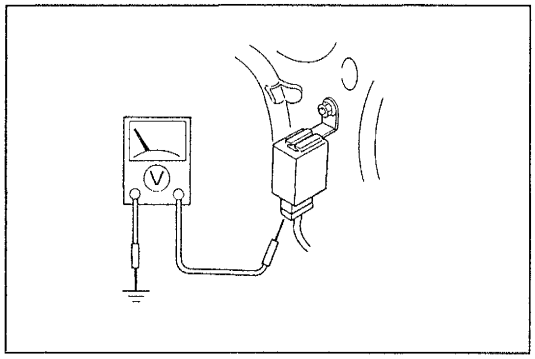

Step 2

Measure the voltage at the (W/G) terminal wire of the door lock timer unit connector.

B+: Battery positive voltage

Voltage	Action
B+	Go to Step 3
Other	Repair wiring harness (Fuse block—Door lock timer unit)

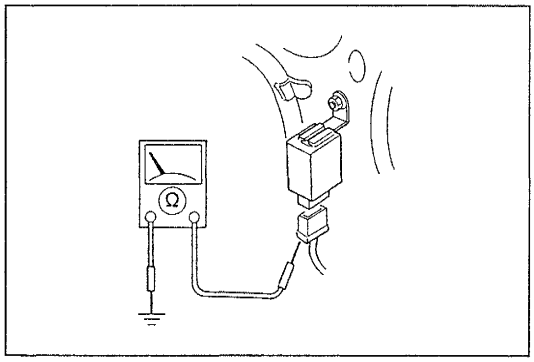

Step 3

1. Disconnect the door lock timer unit connector.
2. Check for continuity between the (B) terminal wire and ground.

Continuity	Action
Yes	Reconnect connector and go to Step 4
No	Repair wiring harness (Door lock timer unit—GND)

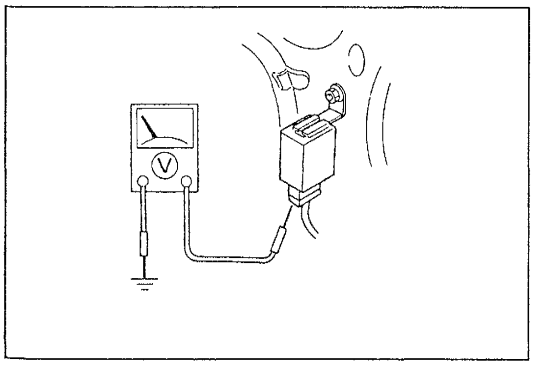

Step 4

Measure the voltage at the (BR), (O) and (Y) terminal wires of the door lock timer unit connector.

B+: Battery positive voltage

Voltage	Action
B+	Go to Step 5
Other	Check the door lock timer unit (Refer to page K2—17)

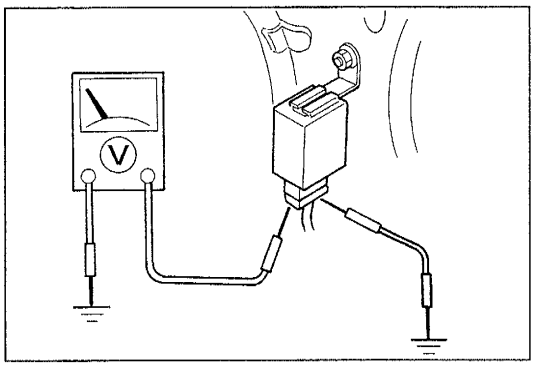

Step 5

1. Measure the voltage at the terminal wires of the door lock timer unit connector with the following terminal wires grounded.

B+: Battery positive voltage

Connect to ground	Action	Voltage
(BR) wire	(R) wire	B+
(O) wire	(L) wire	B+
(Y) wire	(G) wire	B+

2. If correct, go to Step 6.
3. If not as specified, check the door lock timer unit. (Refer to page K2–17.)

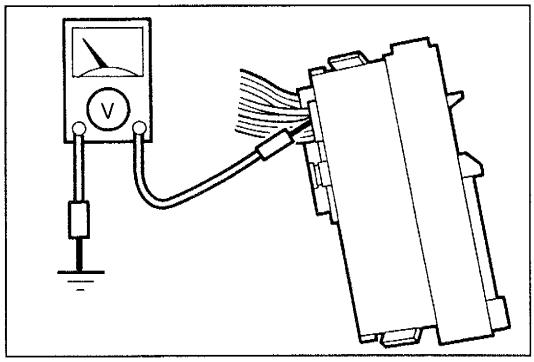

Step 6

Measure the voltage at the 2K (G/B) terminal wire of the CPU connector with the driver's door lock knob in the LOCK position.

B+: Battery positive voltage

Voltage	Action
B+	Replace the CPU (Refer to section Z3)
Other	Go to Step 7

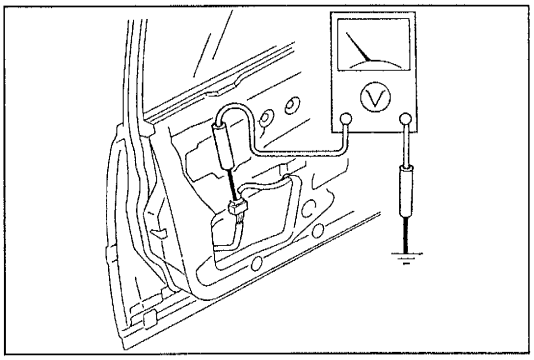

Step 7

1. Remove the driver's door trim and door screen. (Refer to page K2–19 or K2–21.)
2. Measure the voltage at the (L/R) terminal wire of the door lock-link switch connector.

B+: Battery positive voltage

Voltage	Action
B+	Go to Step 8
Other	Repair wiring harness (Fuse block—Door lock-link switch)

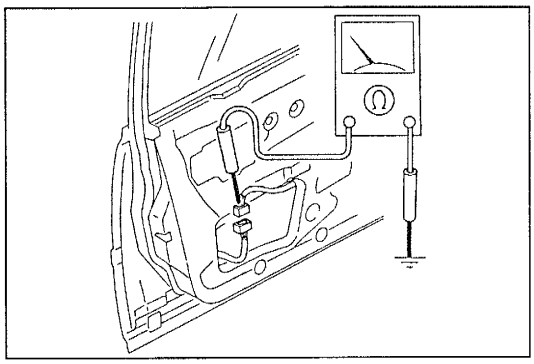

Step 8

1. Disconnect the door lock-link switch connector.
2. Check for continuity between the (B) terminal wire and ground.

Continuity	Action
Yes	Reconnect connector and go to Step 9
No	Repair wiring harness (Door lock-link switch—GND)

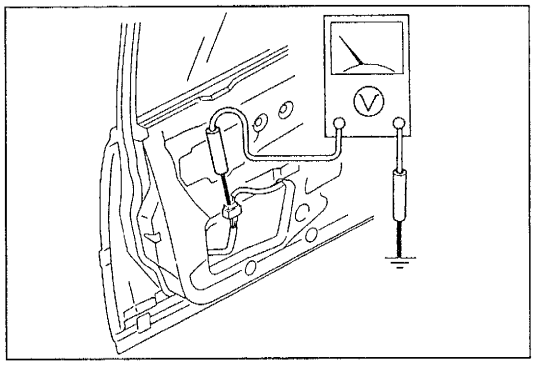

Step 9

Measure the voltage at the (G/B) terminal wire of the door lock-link switch connector with the driver's door lock knob in the LOCK position.

B+: Battery positive voltage

Voltage	Action
B+	Repair wiring harness (Door lock-link switch—CPU)
Other	Check door lock-link switch (Refer to page K2–18)

Flowchart No. 3	Symptom	Power door lock system at specific door does not function (without keyless entry system)

Possible cause
- Damaged door lock actuator
- Open or short circuit in wiring harness
- Poor connection of connector

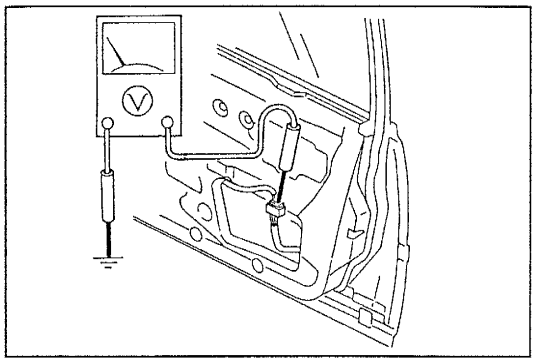

Remedy
1. Remove the door trim and door screen.
   (Refer to pages K2–18, K2–19, and K2–20.)
2. Measure the voltage at the terminal wires of the door lock actuator connector with the driver's door lock knob in the following positions.

B+: Battery positive voltage

Knob position	Terminal	Voltage
Lock	(R) wire	B+
Unlock	(G) wire	B+

3. If correct, check the door lock actuator.
   (Refer to page K2–18.)
4. If not as specified, repair the wiring harness
   (door lock timer unit—door lock actuator).

Flowchart No. 4	Symptom	Power door lock system at specific door does not function (with keyless entry system)

Possible cause
- Damaged CPU
- Damaged door lock timer unit
- Damaged door lock-unit switch
- Damaged door lock actuator
- Open or short circuit in wiring harness
- Poor connection of connector

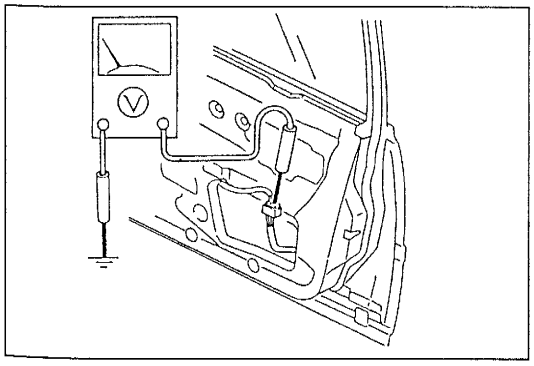

Step 1
1. Remove the door trim and door screen.
   (Refer to pages K2–19, K2–20, and K2–21.)
2. Measure the voltage at the terminal wires of the door lock actuator connector with the driver's door lock knob in the following positions.

B+: Battery positive voltage

Knob position	Terminal	Voltage
Lock	(R) ((L)) wire	B+
Unlock	(G) wire	B+

(( )) : except passenger's door

3. If correct, check the door lock actuator.
   (Refer to page K2–18.)
4. If not as specified, go to Step 2
   (door lock timer unit—door lock actuator).

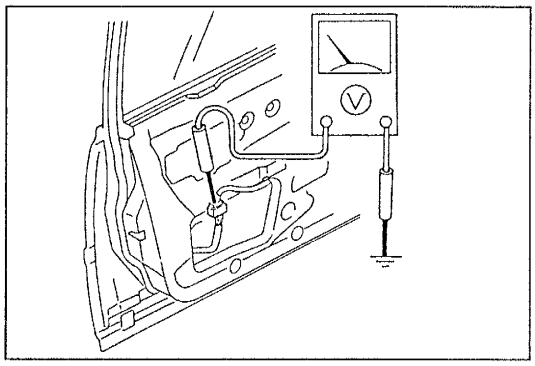

Step 2

Measure the voltage at the (L/R) terminal wire of the door lock-link switch connector.

B+: Battery positive voltage

Voltage	Action
B+	Go to Step 3
Other	Repair wiring harness (Fuse block—Door lock-link switch)

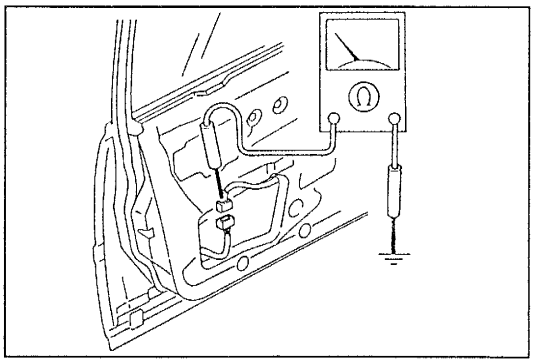

Step 3

1. Disconnect the door lock-link switch connector.
2. Check for continuity between the (B) terminal wire and ground.

Continuity	Action
Yes	Reconnect connector and go to Step 4
No	Repair wiring harness (Door lock-link switch—GND)

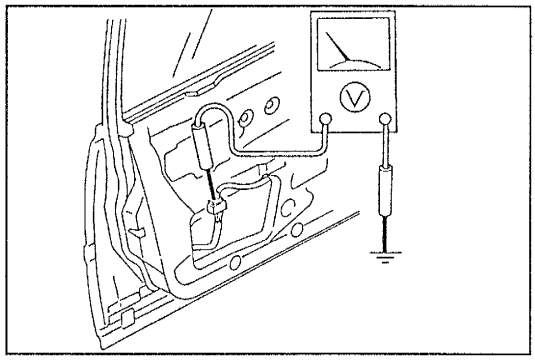

Step 4

1. Measure the voltage at the terminal wire of the door lock-links witch connector with the driver's door lock knob in the following positions.

B+: Battery positive voltage

Knob position	Terminal	Voltage
Lock	(G/B) wire	B+
Unlock		B+

2. If correct, check the door lock actuators. (Refer to page K2–18.)
3. If not as specified, go to Step 5

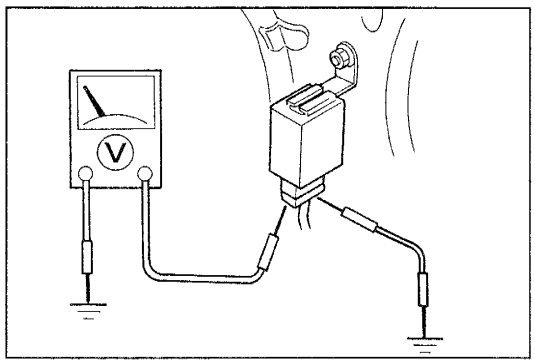

Step 5

1. Measure the voltage at the terminal wires of the door lock timer unit connector with the following terminal wires grounded.

B+: Battery positive voltage

Connect to ground	Action	Voltage
(BR) wire	(R) wire	B+
(O) wire	(L) wire	B+
(Y) wire	(G) wire	B+

2. If correct, go to Step 6.
3. If not as specified, check the door lock timer unit. (Refer to page K2–17.)

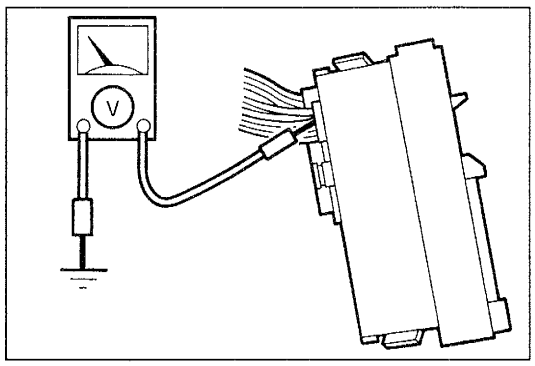

Step 6

Measure the voltage at the 2E (BR), 2I (O) and 2G (R) terminal wires of the CPU connector.

B+: Battery positive voltage

Voltage	Action
B+	Replace the CPU (Refer to section Z3)
Other	Repair wiring harness (Door lock timer unit—CPU)

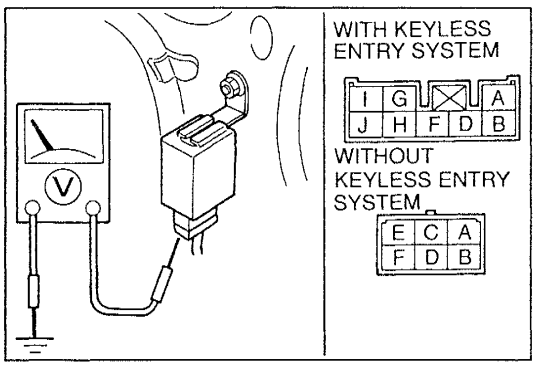

DOOR LOCK TIMER UNIT

Inspection

1. Measure the voltage at the terminals of the door lock timer unit as indicated below.
2. If not as specified, replace the door lock timer unit.

Without keyless entry system

B+: Battery positive voltage

Terminal	Connection	Test condition	Voltage
A	DOOR LOCK 30A fuse	Constant	B+
B	GND	Constant	0V
C	Door lock actuator	Door lock actuator unlocked	0V → B+ → 0V
		Other	0V
E	Door lock actuator	Door lock actuator locked	0V → B+ → 0V
		Other	0V
F	Door lock-link switch	Door lock actuator locked	B+
		Door lock actuator unlocked	0V

With keyless entry system

Terminal	Connection	Test condition	Voltage
A	Door lock actuator	Door lock actuator locked	0V → B+ → 0V
		Other	0V
B	Door lock actuator	Door lock actuator unlocked	0V → B+ → 0V
		Other	0V
D	CPU (driver's door unlocked)	Door lock actuator unlocked	B+ → 0V → B+
		Other	B+
F	Door lock actuator	Door lock actuator unlocked	0V → B+ → 0V
		Other	0V
G	CPU (passenger's door and rear doors unlocked)	Door lock actuator unlocked	B+ → 0V → B+
		Other	B+
H	CPU (all doors locked)	Door lock actuator locked	B+ → 0V → B+
		Other	B+
I	DOOR LOCK 30A fuse	Constant	B+
J	GND	Constant	0V

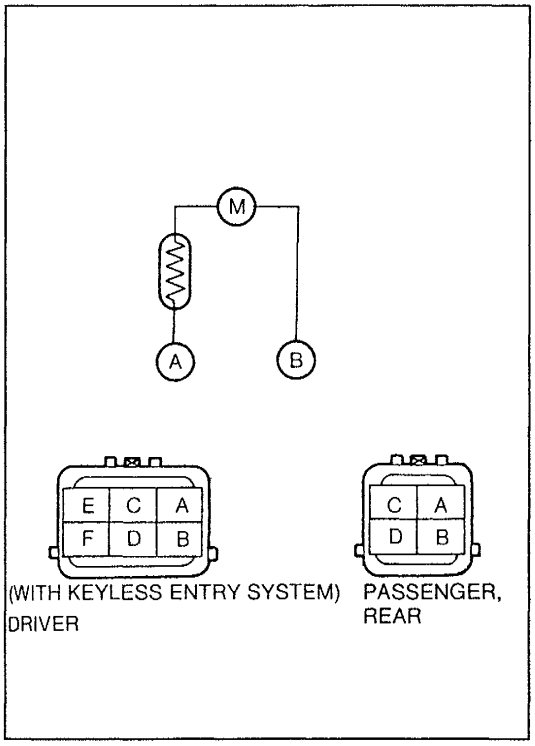

DOOR LOCK ACTUATOR

Inspection

1. Remove the door lock from the door.
   (Refer to pages K2–19, K2–20, and K2–21.)
2. Apply battery positive voltage to the door lock actuator terminals and check the operation of the actuator.

B+: Battery positive voltage

Connection		Actuator operation
B+	GND	
A	B	Unlock
B	A	Lock

3. If not as specified, replace the door lock.

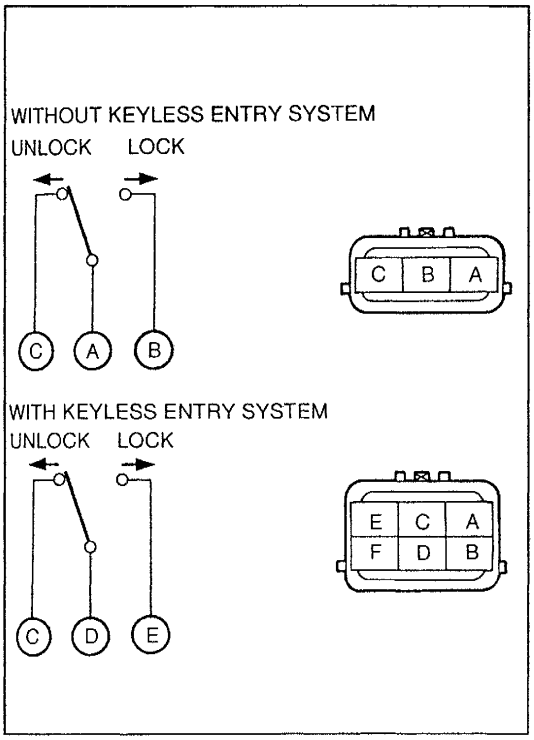

DOOR LOCK-LINK SWITCH (within driver's door lock)

Inspection

1. Remove the door lock from the door.
   (Refer to page K2–19 or K2–21.)
2. Check for continuity between the door lock switch terminals.

(Without keyless entry system)

Switch position \ Terminal	A	B	C
Lock	○——	——○	
Unlock	○——	——	——○

(With keyless entry system)

Switch position \ Terminal	C	D	E
Lock		○——	——○
Unlock	○——	——○	

○—○ : Continuity

3. If not as specified, replace the door lock.

COMPONENTS

Removal / Installation

1. Raise the front door glass fully.
2. Disconnect the negative battery cable.

Note

- Remove the door screen carefully so that it may be reused.

3. Remove in the order shown in the figure. (Refer to the 1996 626/MX-6 Workshop Manual, section S, when removing the front door trim.)
4. Install in the reverse order of removal.

626 (FRONT DOOR)

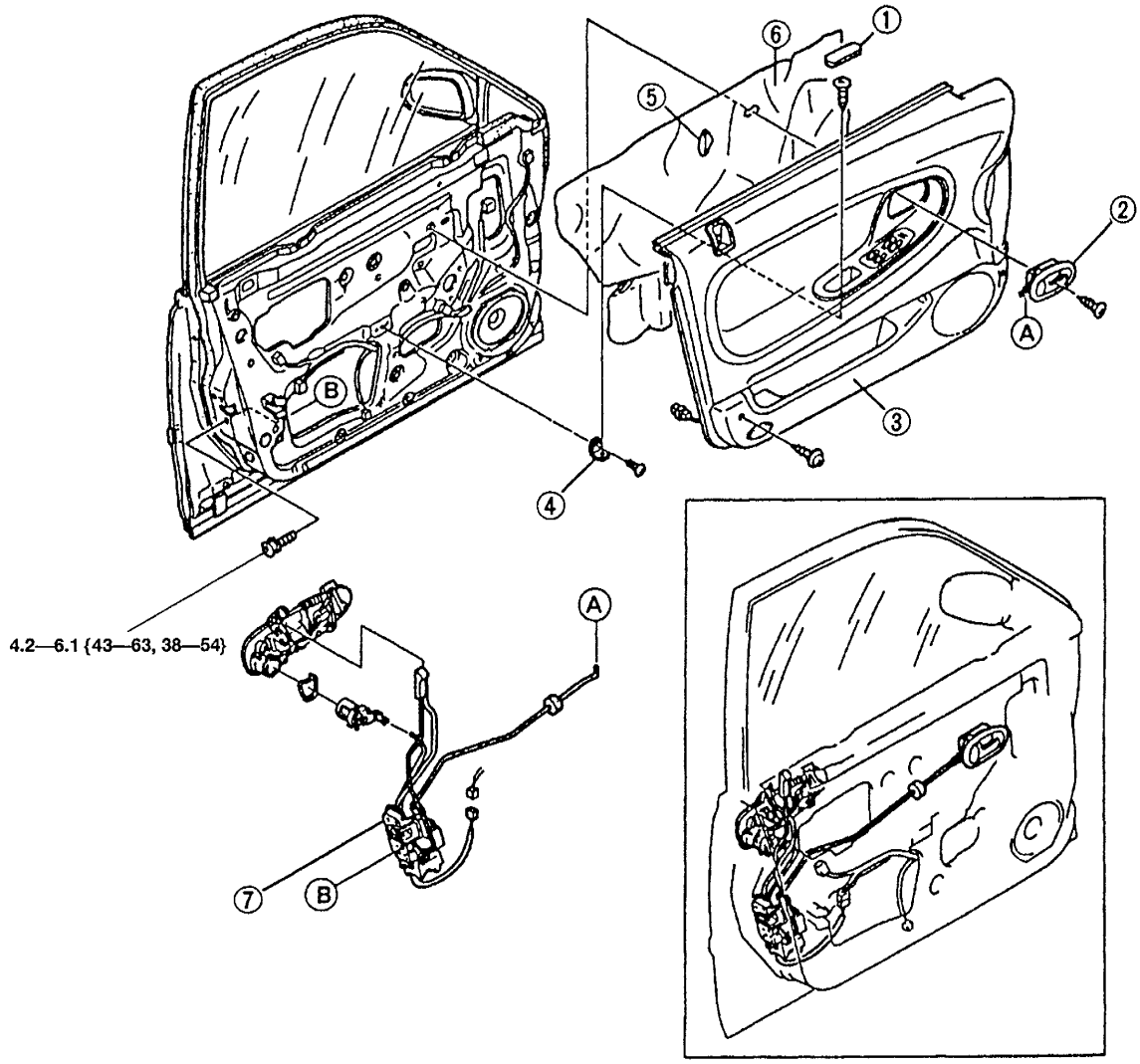

1. Recess cover
2. Inner handle
3. Front door trim
4. Bracket
5. Sealing pad
6. Door screen
7. Front door lock
   a) Door lock-link switch (within driver's door lock)
      Inspection..... page K2–18
   b) Door lock actuator (within door lock)
      Inspection..... page K2–18

Removal / Installation

1. Raise the rear door glass fully.
2. Disconnect the negative battery cable.

Note

- Remove the door screen carefully so that it may be reused.

3. Remove in the order shown in the figure. (Refer to the 1996 626/MX-6 Workshop Manual, section S, when removing the rear door trim.)
4. Install in the reverse order of removal.

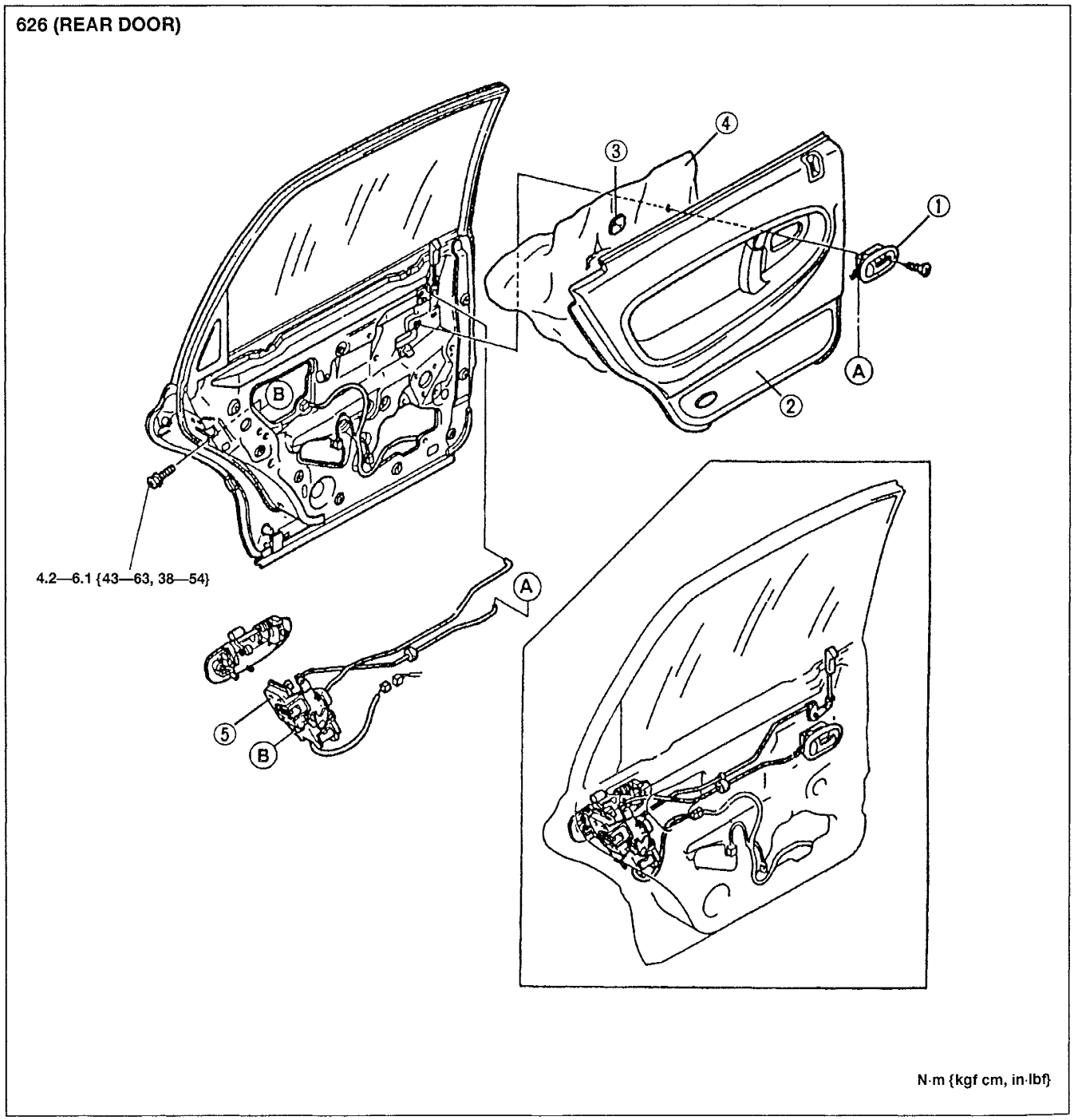

1. Inner handle
2. Rear door trim
3. Sealing pad
4. Door screen
5. Door lock actuator (within door lock)
   Inspection ..... page K2–18

Removal / Installation

1. Raise the door glass fully.
2. Disconnect the negative battery cable.

Note

- Remove the door screen carefully so that it may be reused.

3. Remove in the order shown in the figure. (Refer to the 1996 626/MX-6 Workshop Manual, section S, when removing the door trim.)
4. Install in the reverse order of removal.

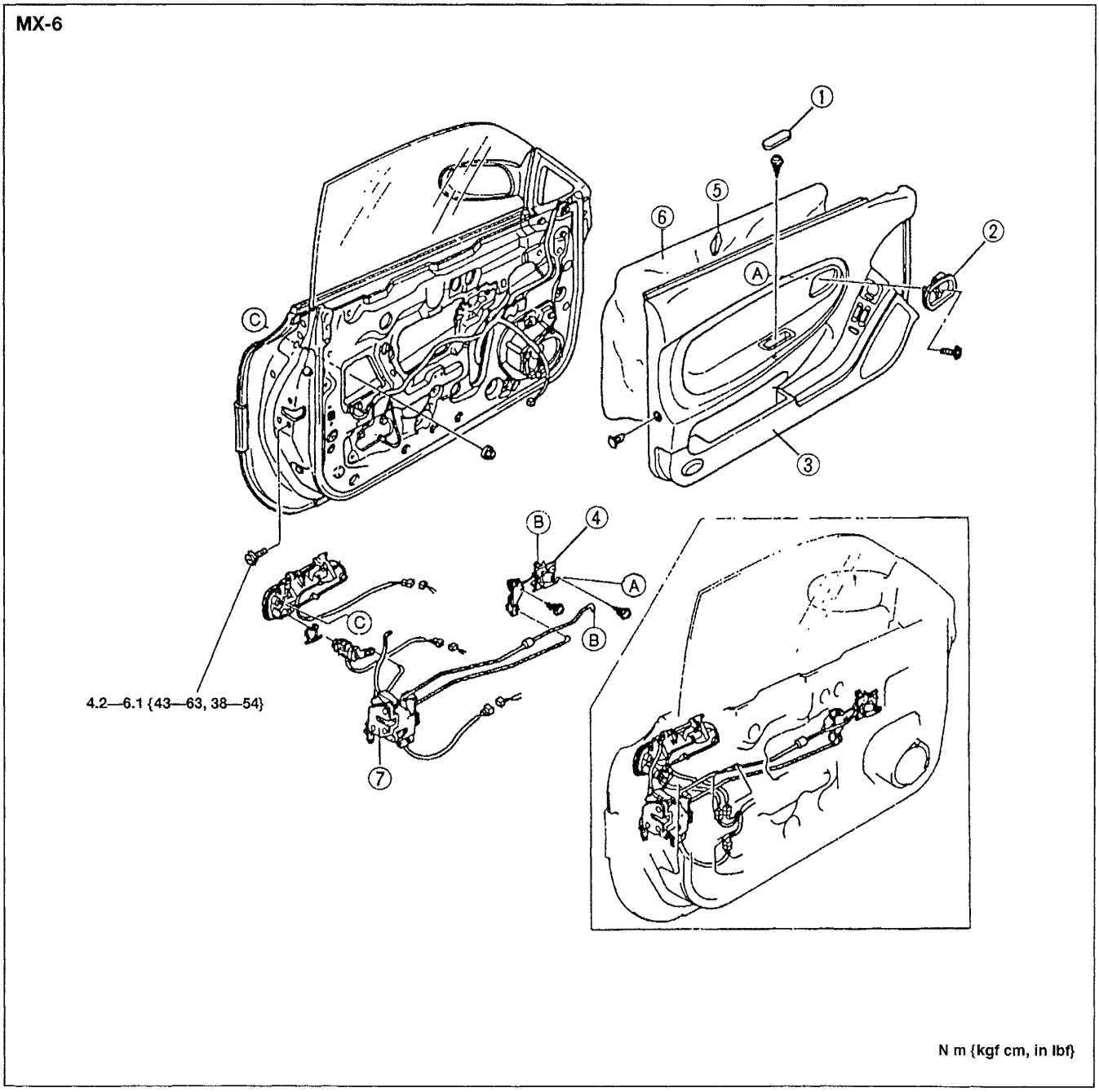

1. Recess cover
2. Inner handle cover
3. Door trim
4. Inner handle
5. Sealing pad
6. Door screen
7. Door lock
   a) Door lock-link switch (within driver's door lock)
      Inspection..... page K2–18
   b) Door lock actuator (within door lock)
      Inspection..... page K2–18

Before beginning any service procedure, refer to section S of this manual for air bag system service warnings.

KEYLESS ENTRY SYSTEM

KEYLESS ENTRY SYSTEM

STRUCTURAL VIEW

626

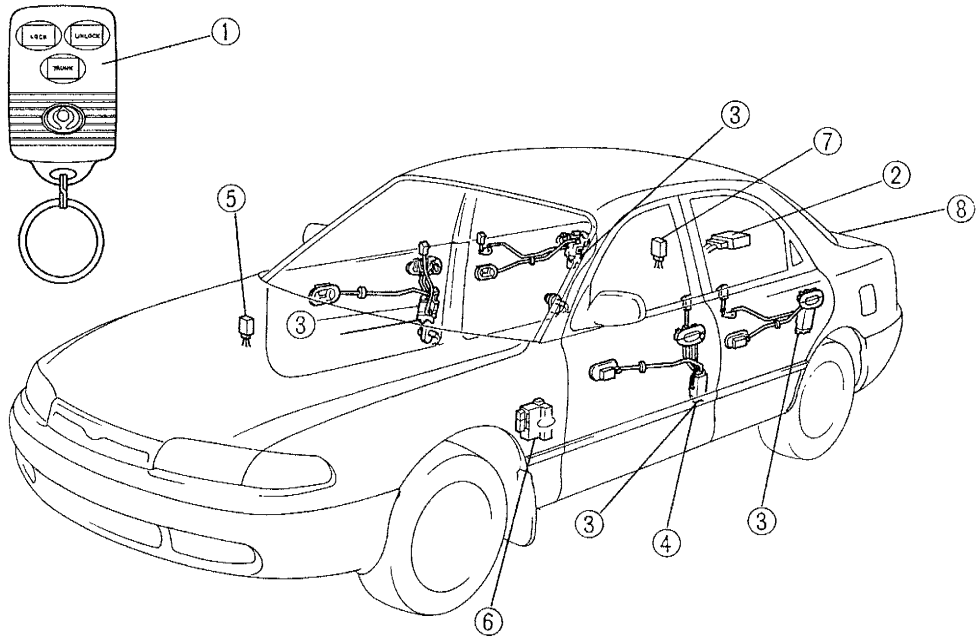

MX-6

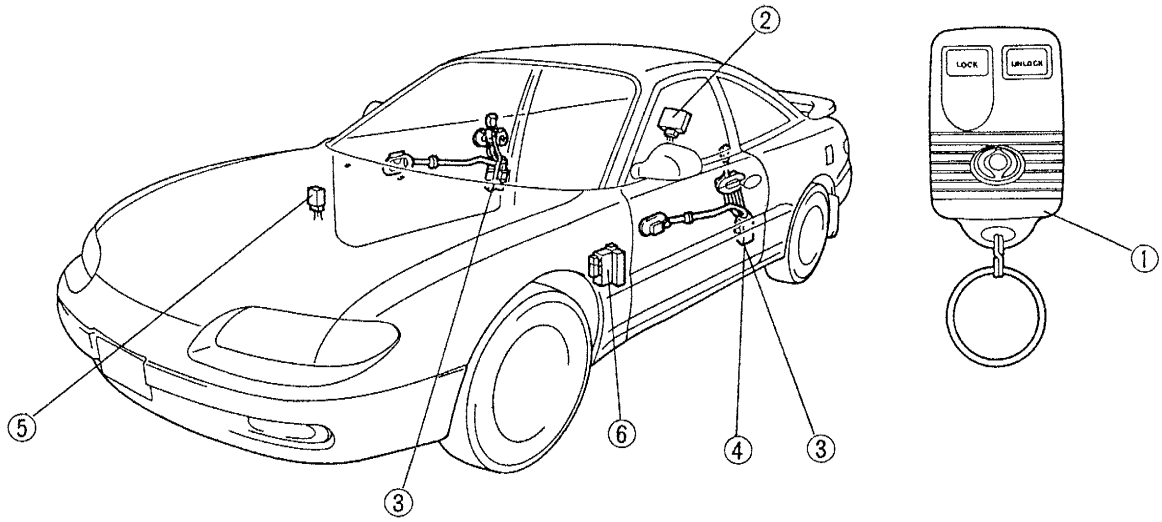

1. Transmitter
   - Replacing the battery ..... page K3–13
   - Changing the ID code ..... page K3–14
   - Deleting the ID code ..... page K3–15
2. Keyless unit
   - Removal / Installation ..... page K3–16
   - Terminal voltage list ..... page K3–17
3. Door lock actuator
   - Inspection ..... section K2
4. Door lock-link switch
   - Inspection ..... section K2
5. Door lock timer unit
   - Inspection ..... section K2
6. CPU
   - Removal / Installation ..... section Z3
7. Trunk lid opener relay
   - Removal / Installation ..... page K3–18
   - Inspection ..... page K3–18
8. Trunk lid actuator
   - Removal / Installation ..... page K3–19
   - Inspection ..... page K3–19

SYSTEM DIAGRAM

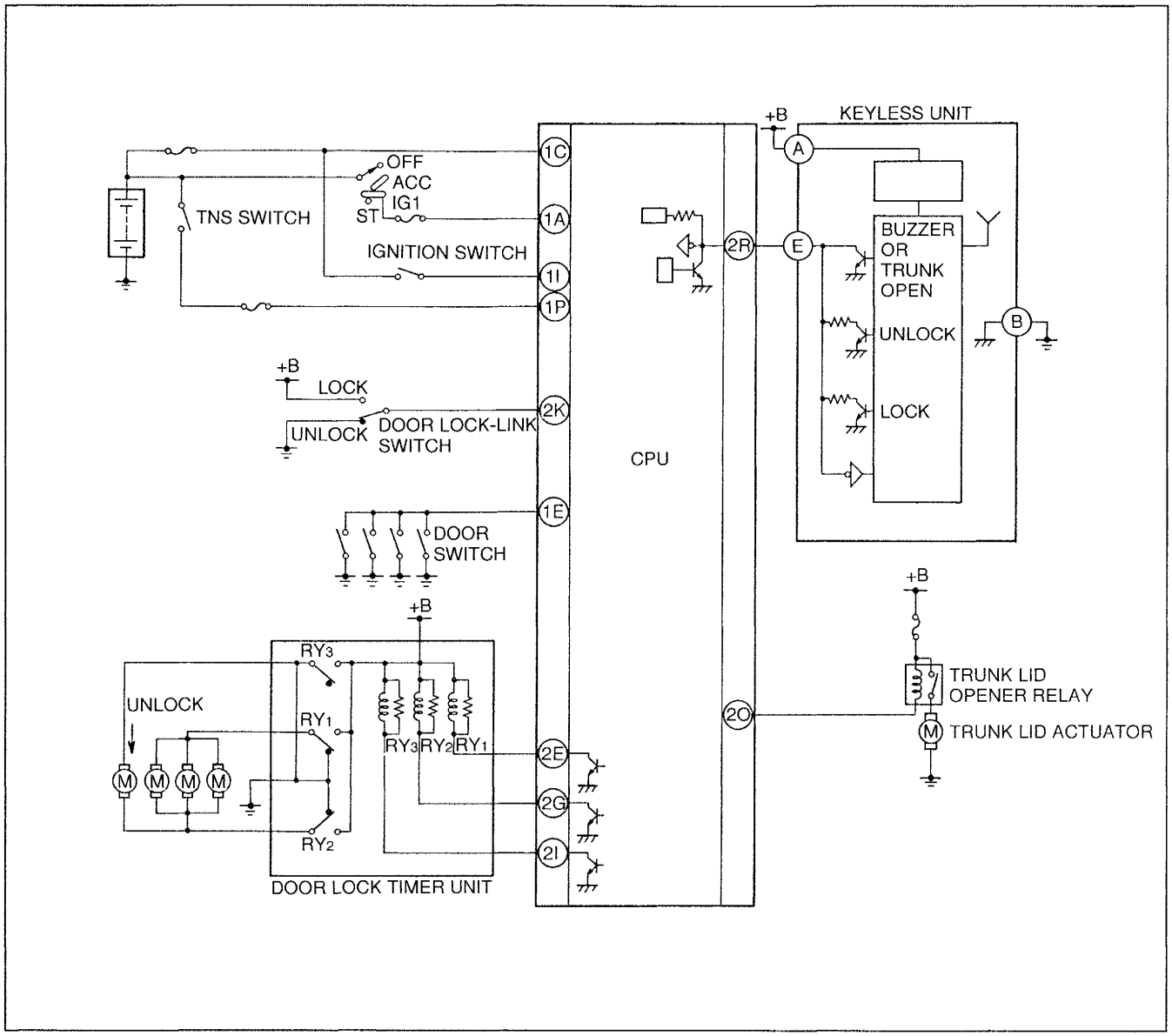

System Operation

The operation of the keyless entry system is outlined in the table below. The system operates when the ignition switch is not at ON.

Function	Operating conditions	Driver's door	Passenger's door	Rear door (626)	Trunk (626)	Warning
LOCK	LOCK button pressed	Unlock→Lock	Unlock→Lock	Unlock→Lock	Inoperative	Inoperative
	LOCK button pressed 2 times within 5 seconds with lock-link switch at lock and door switch off	Lock	Lock	Lock	Inoperative	Horn sounds for 50 milliseconds
UNLOCK	UNLOCK button pressed	Lock→Unlock	Lock	Lock	Inoperative	Inoperative
	UNLOCK button pressed 2 times within 5 seconds	Lock→Unlock	Lock→Unlock	Lock→Unlock	Inoperative	Inoperative
Auto lock	• Door SW: OFF • Lock-link SW: Unlock • Key reminder SW: OFF for 30 seconds after UNLOCK button is pressed	Unlock→Lock	Unlock→Lock	Unlock→Lock	Inoperative	Inoperative
Trunk	TRUNK button pressed	Inoperative	Inoperative	Inoperative	Open	Inoperative
Keyless cancel	LOCK/UNLOCK button pressed with ignition switch at ON	Inoperative	Inoperative	Inoperative	Inoperative	Inoperative

TROUBLESHOOTING
Circuit Diagram

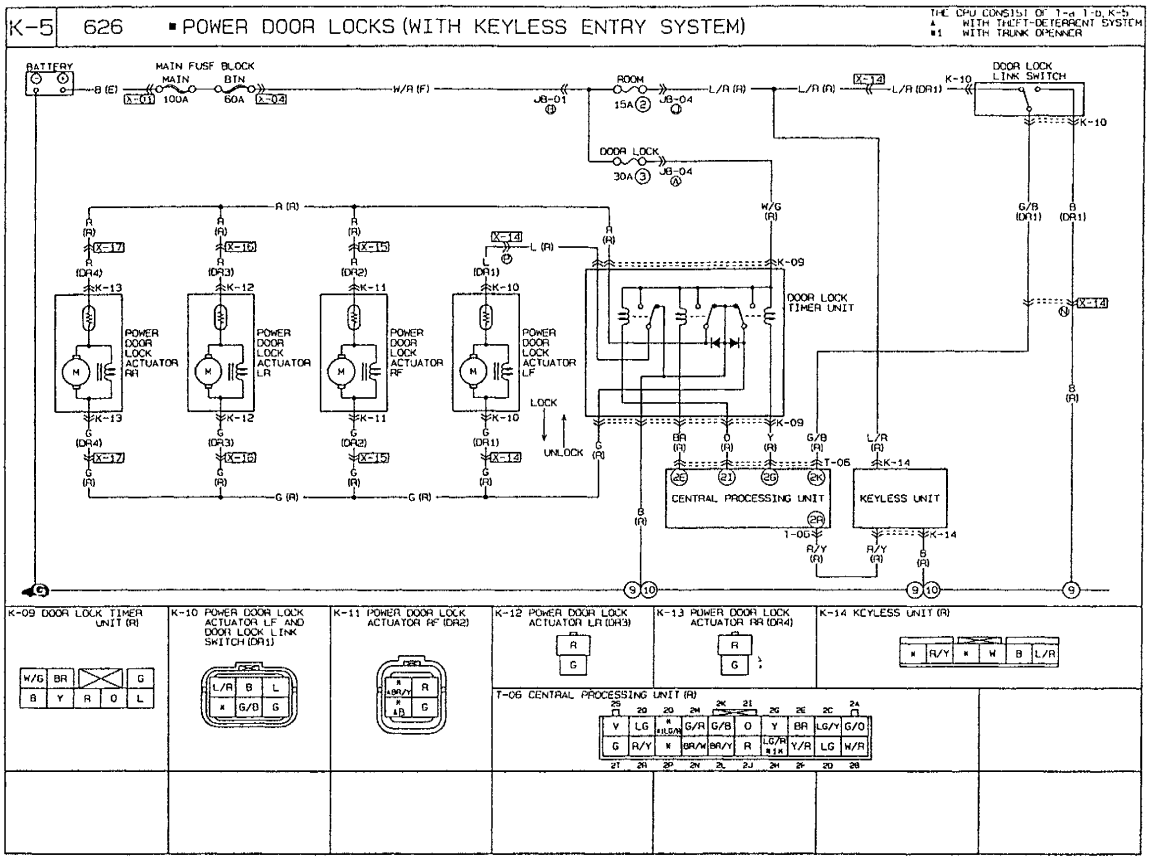

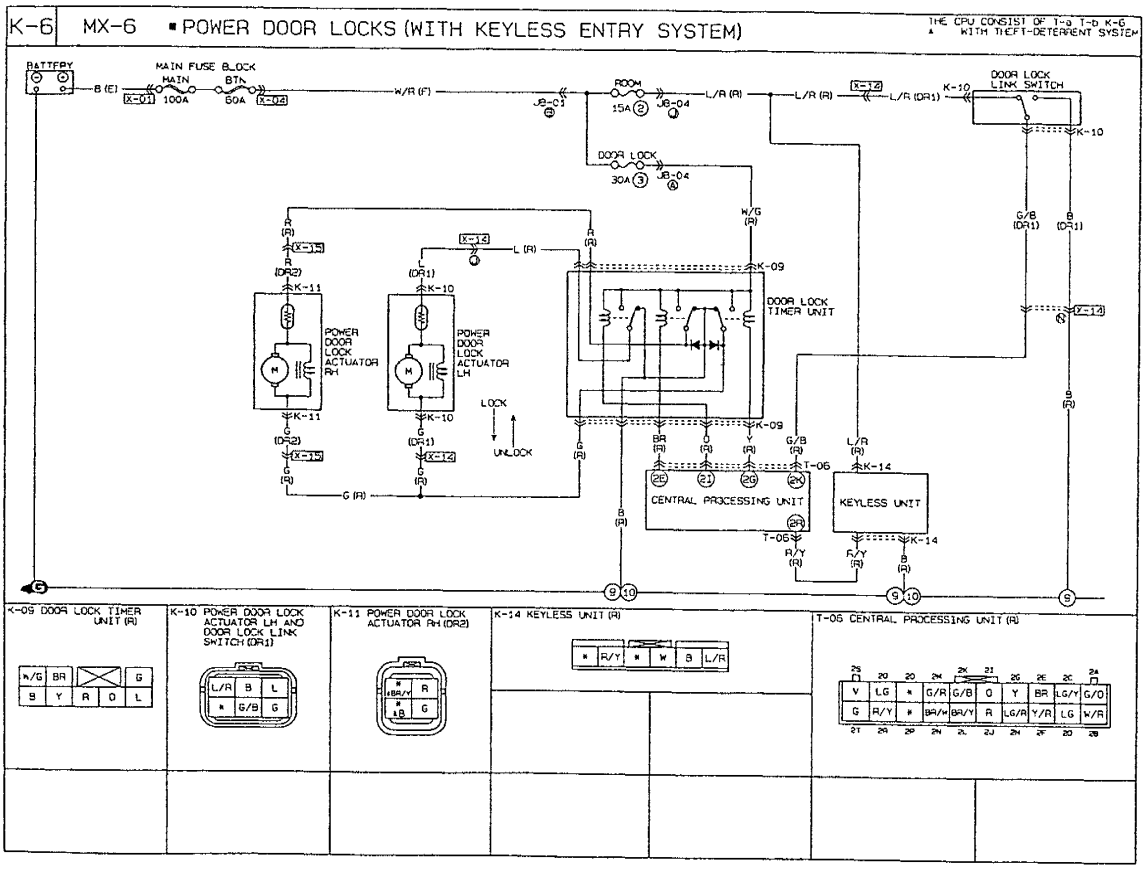

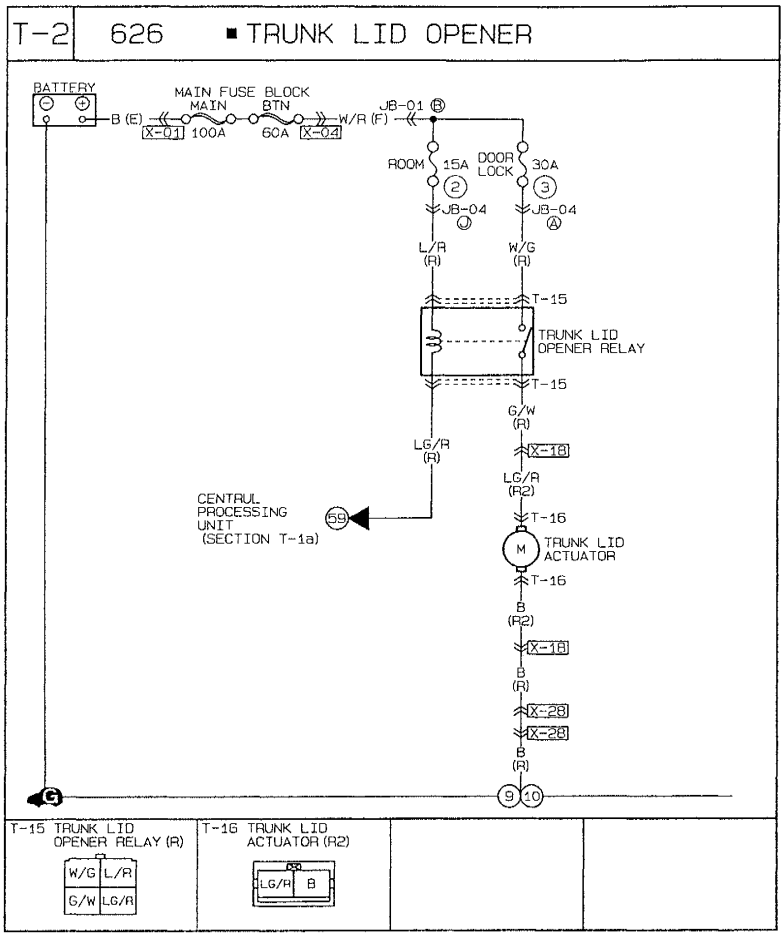
T-2
626
■ TRUNK LID OPENER
BATTERY
MAIN FUSE BLOCK
MAIN
BTN
B (E)
X-01
100A
60A
X-04
W/R (F)
JB-01
ROOM
15A
DOOR LOCK
30A
JB-04
L/R (R)
W/G (R)
T-15
TRUNK LID OPENER RELAY
G/W (R)
LG/R (R)
X-18
LG/R (R2)
CENTRAL PROCESSING UNIT (SECTION T-1a)
59
T-16
TRUNK LID ACTUATOR
B (R2)
B (R)
X-28
T-15 TRUNK LID OPENER RELAY (R)
W/G
L/R
G/W
LG/R
T-16 TRUNK LID ACTUATOR (R2)
LG/R
B

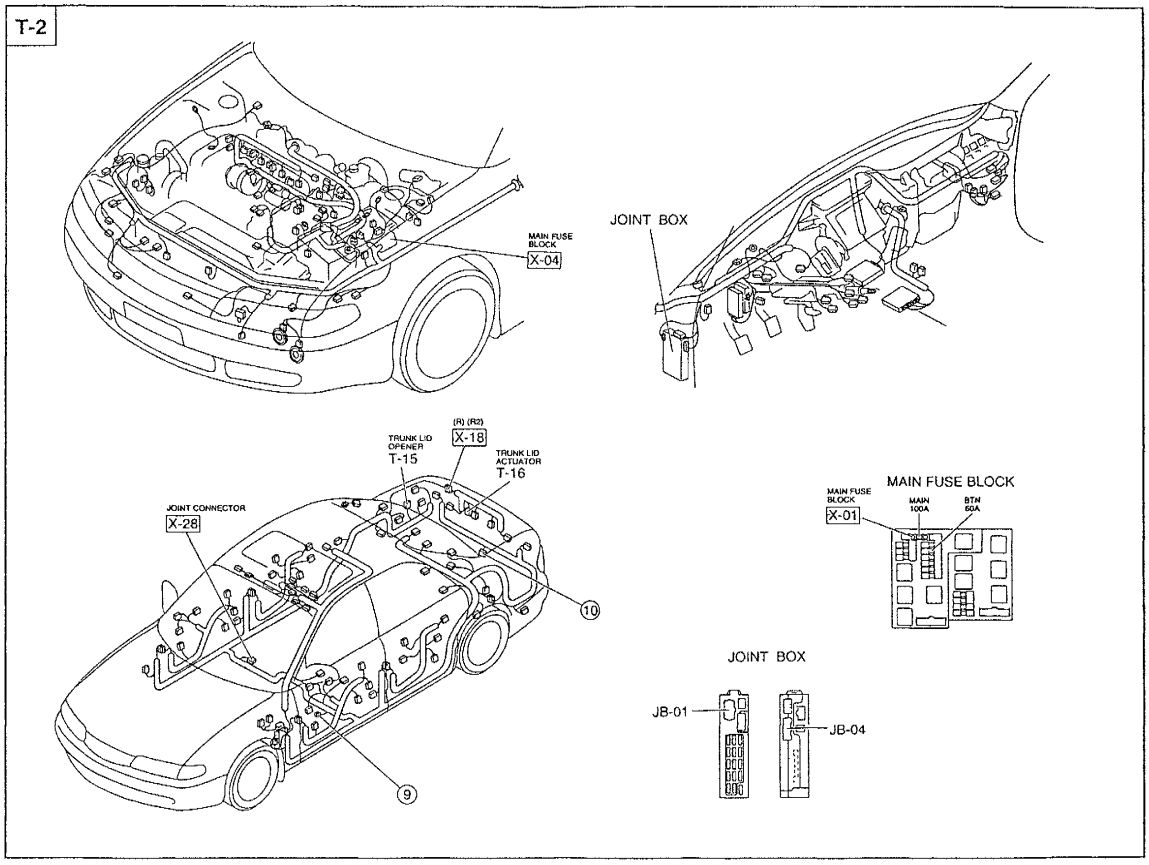
T-2
MAIN FUSE BLOCK
X-04
JOINT BOX
TRUNK LID OPENER
T-15
(R) (R2)
X-18
TRUNK LID ACTUATOR
T-16
JOINT CONNECTOR
X-28
10
9
MAIN FUSE BLOCK
MAIN FUSE BLOCK
X-01
MAIN 100A
BTN 60A
JOINT BOX
JB-01
JB-04

Connector Locations

626

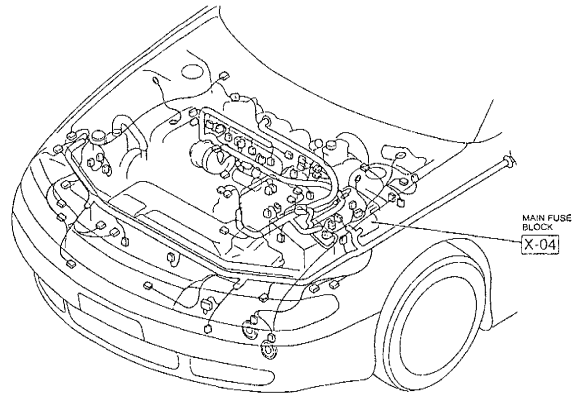

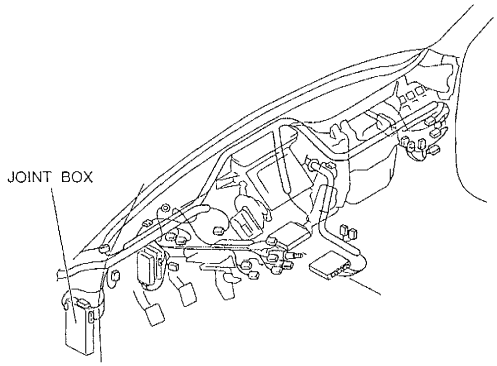

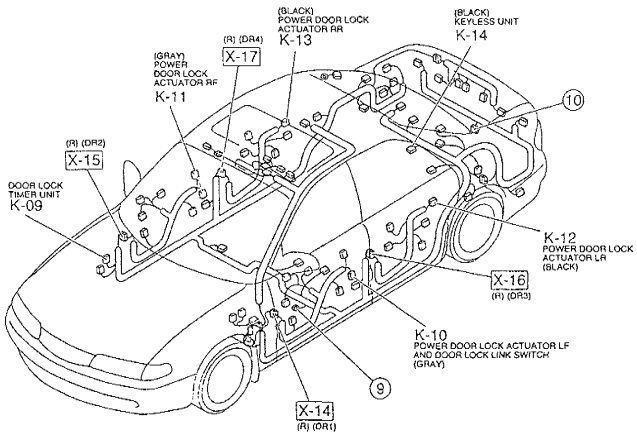

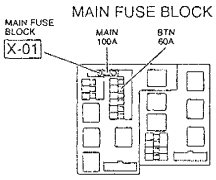

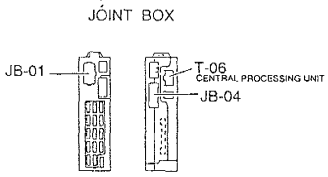

MX-6

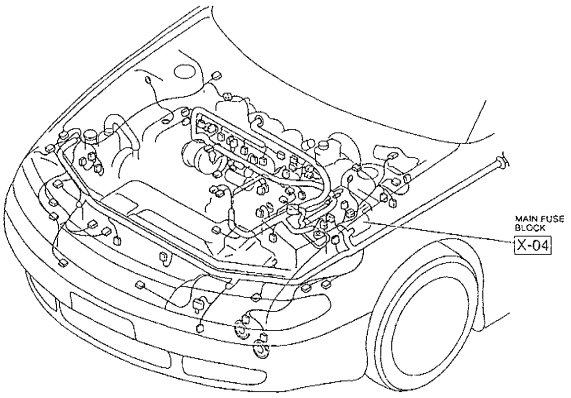

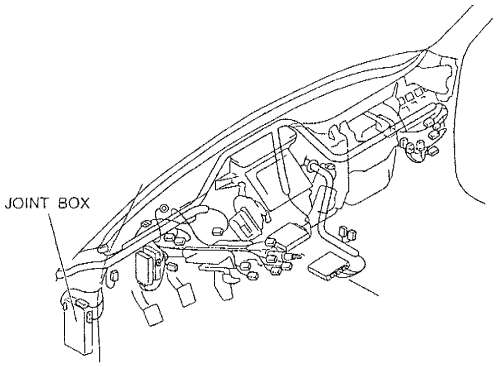

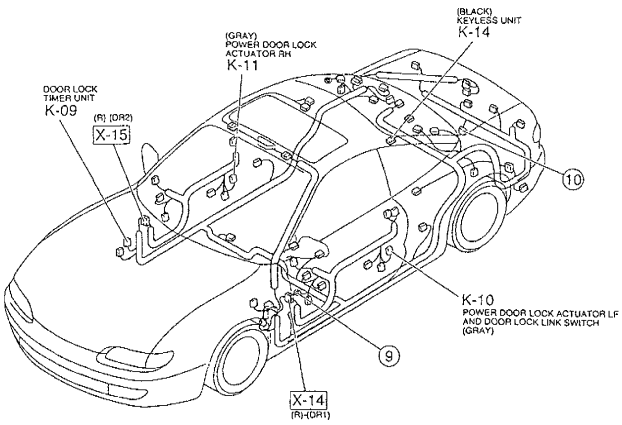

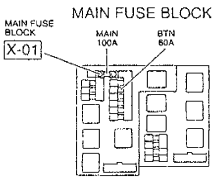

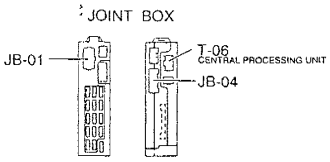

Checklist

Procedure / Proper operation	Symptom	Flowchart No.
Operate keyless entry system by using transmitter and verify that keyless entry system works properly.	Keyless entry system does not function (Door)	1
	Keyless entry system does not function (Trunk)	2

Flowchart No.1	Symptom	Keyless entry system does not function (Door)

Possible cause
- Burnt ROOM 15A fuse
- Damaged keyless unit
- Damaged CPU
- Damaged transmitter
- Open or short circuit in wiring harness
- Poor connection of connector

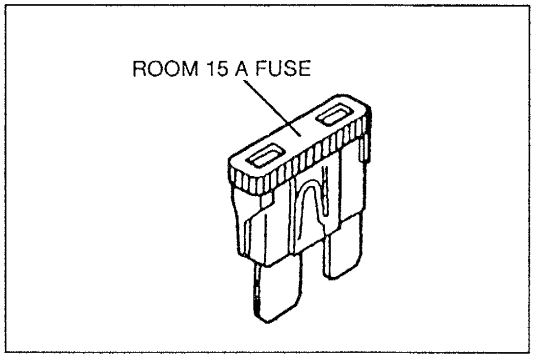

Step 1
Check the ROOM 15A fuse in the fuse block.

Fuse	Action
OK	Go to Step 2
Burnt	Replace fuse after checking and repairing wiring harness

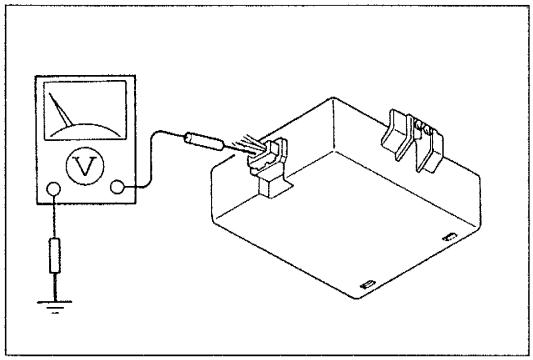

Step 2
1. Open the trunk lid.
2. Measure the voltage at the (L/R) terminal wire of the keyless unit connector in the trunk compartment.

B+: Battery positive voltage

Voltage	Action
B+	Go to Step 3
Other	Repair wiring harness (ROOM 15A fuse—Keyless unit)

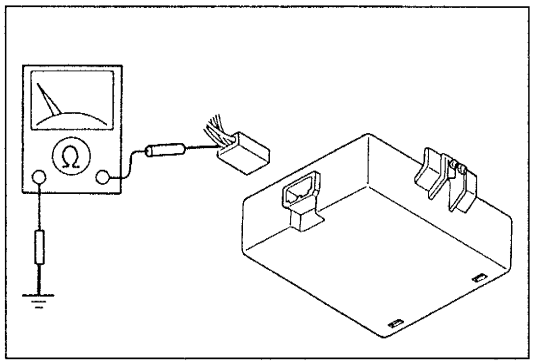

Step 3
1. Disconnect the keyless unit connector.
2. Check for continuity between the (B) terminal wire and ground.

Continuity	Action
Yes	Reconnect connector and go to Step 4
No	Repair wiring harness (Keyless unit—GND)

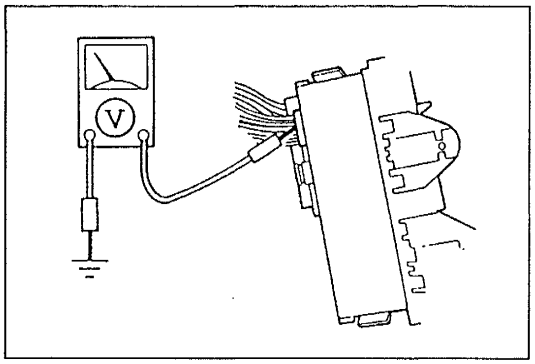

Step 4

Measure the voltage at terminal wire 2R (R/Y) of the CPU connector.

Voltage	Action
5V	Go to Step 5
Other	Check CPU (Refer to section Z3)

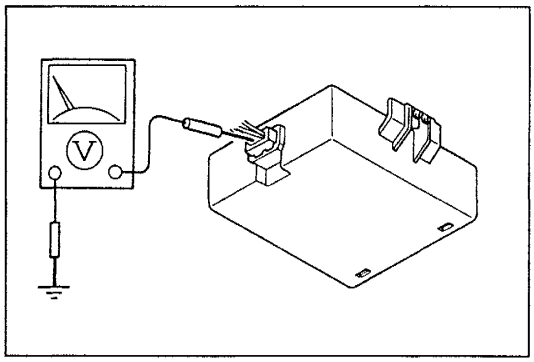

Step 5

Measure the voltage at terminal E (R/Y) wires of the keyless unit connectors.

Voltage	Action
5V	Go to Step 6
Other	Repair wiring harness (Keyless unit—CPU)

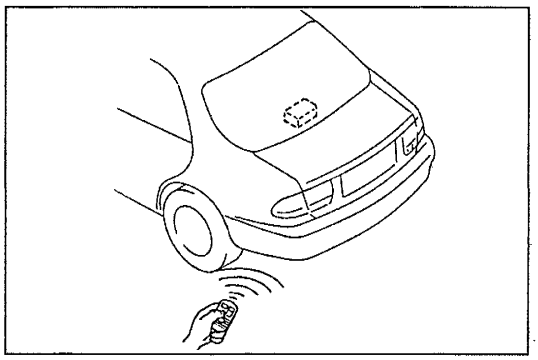

Step 6

1. Replace the transmitter batteries. (Refer to page K3–13.)
2. Press the LOCK or UNLOCK button.

Doors	Action
Lock/unlock	Dispose of old batteries
Other	Carry out self-diagnosis function (Refer to page K3–12)

Flowchart No.2	Symptom	Keyless entry system does not function (Trunk)

Possible cause
- Burnt ROOM 15A fuse
- Burnt DOOR LOCK 30A fuse
- Damaged keyless unit
- Damaged CPU
- Damaged transmitter
- Damaged trunk lid opener relay
- Damaged trunk lid actuator
- Open or short circuit in wiring harness
- Poor connection of connector

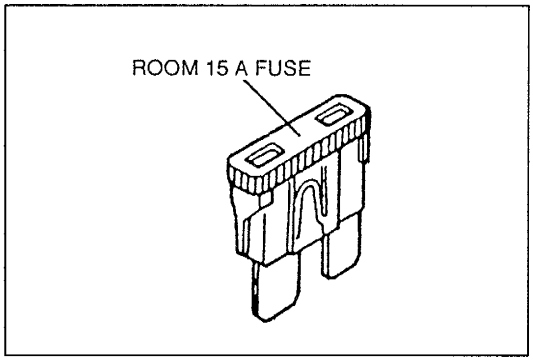

Step 1
Check the ROOM 15A fuse in the fuse block.

Fuse	Action
OK	Go to Step 2
Burnt	Replace fuse after checking and repairing wiring harness

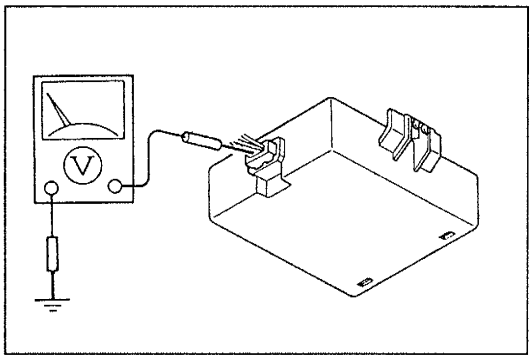

Step 2
1. Open the trunk lid.
2. Measure the voltage at the (L/R) terminal wire of the keyless unit connector in the trunk compartment.

B+: Battery positive voltage

Voltage	Action
B+	Go to Step 3
Other	Repair wiring harness (ROOM 15A fuse—Keyless unit)

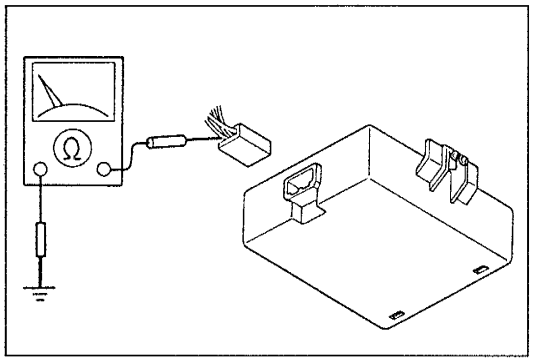

Step 3
1. Disconnect the keyless unit connector.
2. Check for continuity between the (B) terminal wire and ground.

Continuity	Action
Yes	Reconnect connector and go to Step 4
No	Repair wiring harness (Keyless unit—GND)

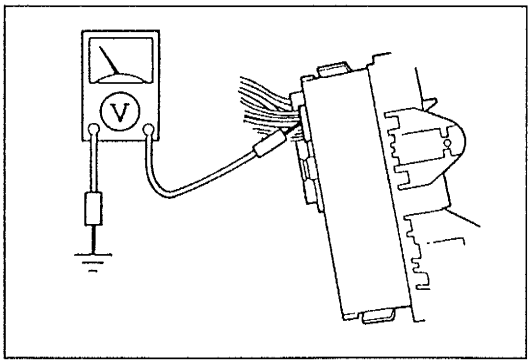

Step 4
Measure the voltage at terminal wire 2R (R/Y) of the CPU connector.

Voltage	Action
5V	Go to Step 5
Other	Check CPU (Refer to section Z3)

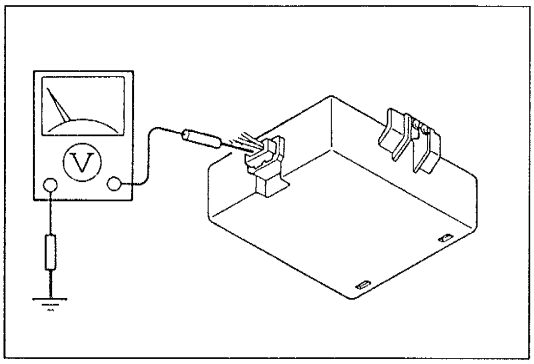

Step 5

Measure the voltage at terminal E (R/Y) wires of the keyless unit connectors.

Voltage	Action
5V	Go to Step 6
Other	Repair wiring harness (Keyless unit—CPU)

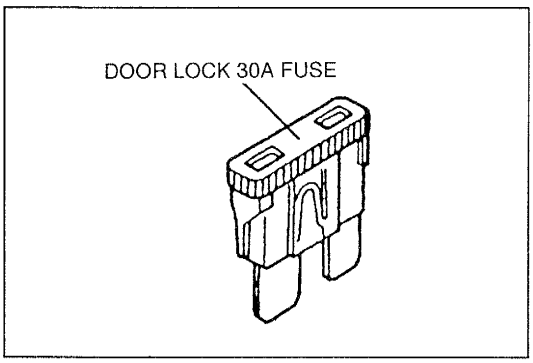

Step 6

Check the DOOR LOCK 30A fuse in the fuse block.

Fuse	Action
OK	Go to Step 7
Burnt	Replace fuse after checking and repairing wiring harness

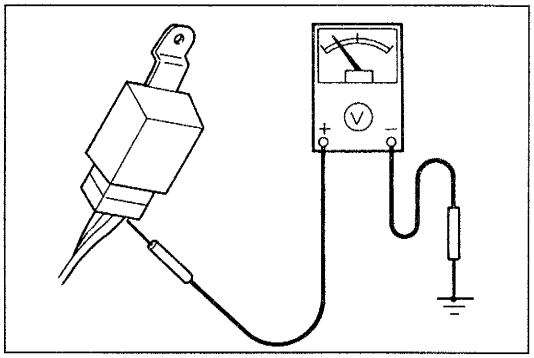

Step 7

1. Remove the trunk side trim.
   (Refer to the 1996 626/MX-6 Workshop Manual, section S.)
2. Measure the voltage at the (W/G) terminal wire of the trunk lid opener relay connector.

B+: Battery positive voltage

Voltage	Action
B+	Go to Step 8
Other	Repair wiring harness (DOOR LOCK 30A fuse—Trunk lid opener relay)

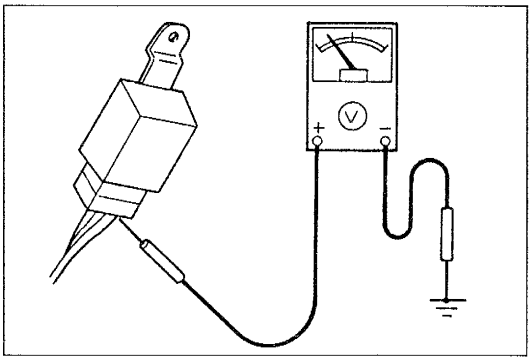

Step 8

Measure the voltage at the (L/R) terminal wire of the trunk lid opener relay connector.

B+: Battery positive voltage

Voltage	Action
B+	Go to Step 9
Other	Repair wiring harness (ROOM 15A fuse—Trunk lid opener relay)

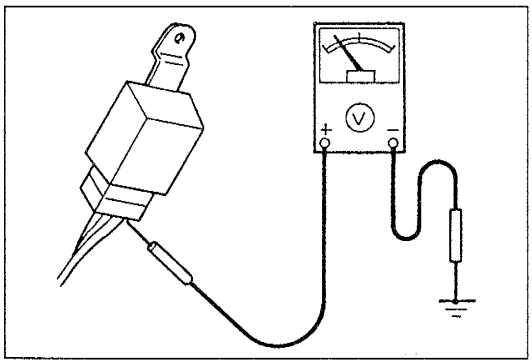

Step 9

Measure the voltage at the (LG/R), (G/W) terminal wire of the trunk lid opener relay connector, with the transmitter by pressing the TRUNK button.

B+: Battery positive voltage

Voltage	Action
B+	Go to Step 10
Other	Check trunk lid opener relay (Refer to page K3–18)

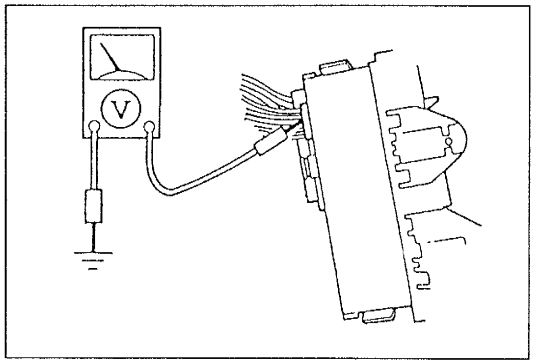

Step 10

Measure the voltage at terminal wire 2O (LG/R) of the CPU connector.

B+: Battery positive voltage

Voltage	Action
B+	Go to Step 11
Other	Check CPU (Refer to section Z3)

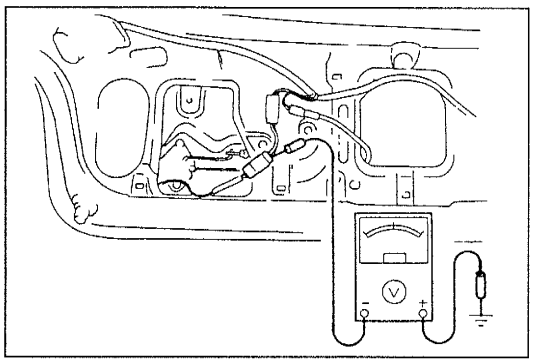

Step 11

Measure the voltage at the (LG/R) terminal wire of the trunk lid actuator connector.

B+: Battery positive voltage

Voltage	Action
B+	Go to Step 12
Other	Repair wiring harness (Trunk lid opener relay—Trunk lid actuator)

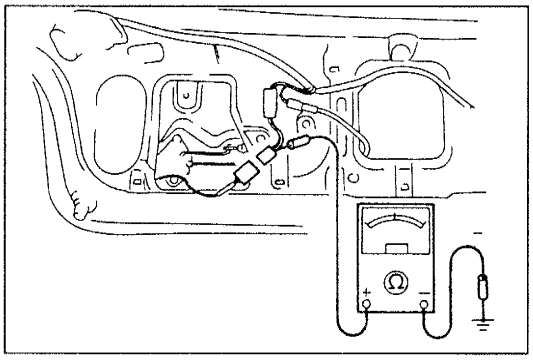

Step 12

1. Disconnect the trunk lid actuator connector.
2. Check for continuity between the (B) terminal wire and ground.

Continuity	Action
Yes	Check trunk lid actuator (Refer to page K3–19)
No	Repair wiring harness (Trunk lid actuator—GND)

Self-diagnosis Function

Outline

- When the self-diagnosis function is operated, the keyless unit sends signals to the CPU to activate the output device. The signals are sent in the following order: Buzzer → Trunk unlock → All doors lock → Driver's door unlock →Passenger's and rear door unlock
- The CPU determines the number of times the buzzer sounds according to the input situation.

Flow of self-diagnosis

To start the self-diagnosis function, complete the procedure below within 180 seconds.

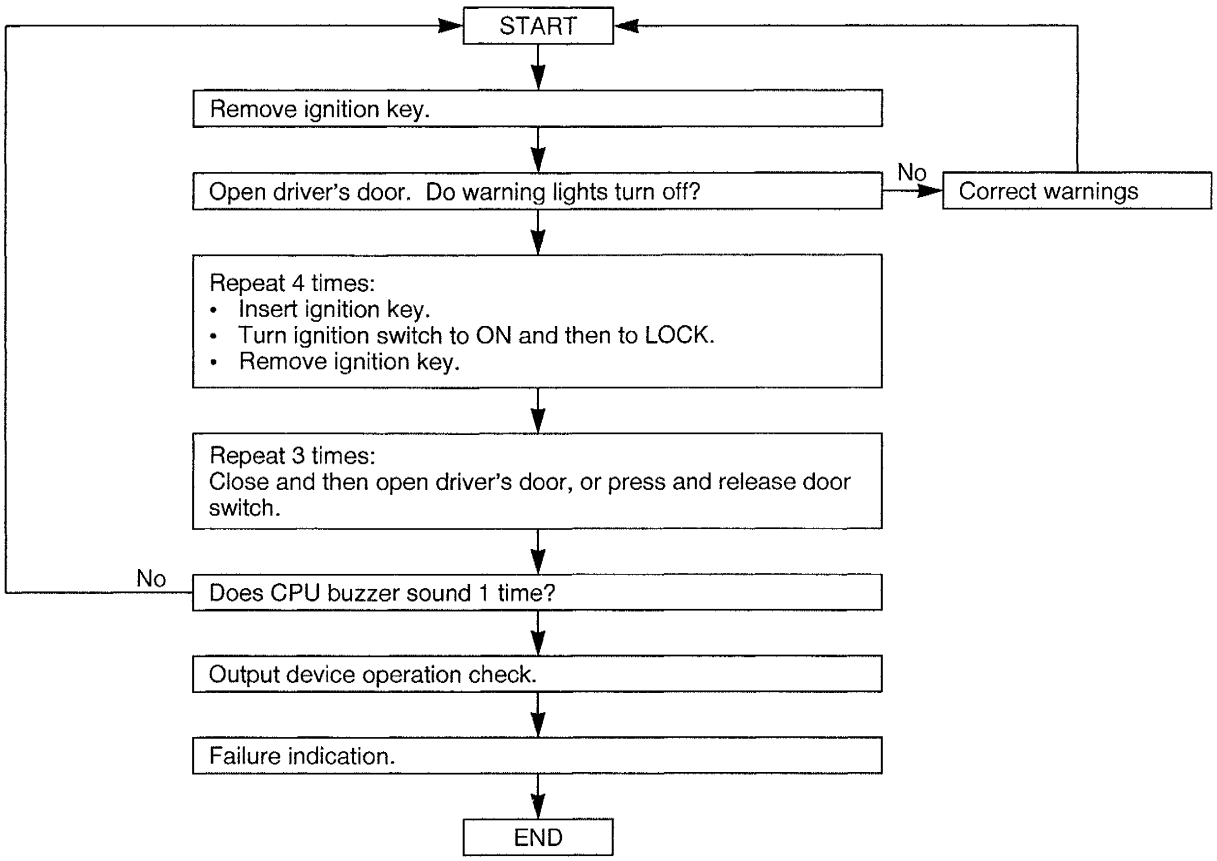

Output device operation check

The keyless unit sends a signal to the CPU and the CPU activates the device every 3 seconds in the following steps.

Step	Function	Driver's door	Passenger's door	Rear door	Trunk
1	UNLOCK	—	—	—	Lock → Unlock
2	LOCK	Unlock → Lock	Unlock → Lock	Unlock → Lock	—
3	UNLOCK	Lock → Unlock	—	—	—
4	UNLOCK	—	Lock → Unlock	Lock → Unlock	—

Failure indication

The number of times the CPU buzzer sounds indicates whether or not the keyless unit and CPU are communicating properly.

No. of CPU buzzer sounds	Condition
1	The keyless unit and CPU are communicating properly.
2	The CPU is not receiving the BUZZER, TRUNK, UNLOCK, and LOCK signals from the keyless unit properly. There may be an open or short circuit between terminal E of the keyless unit and terminal 2R of the CPU, or the keyless unit may be damaged.

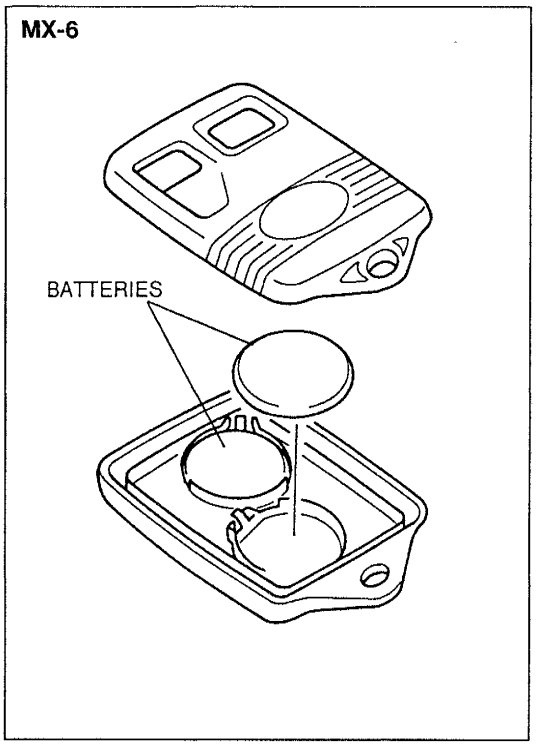

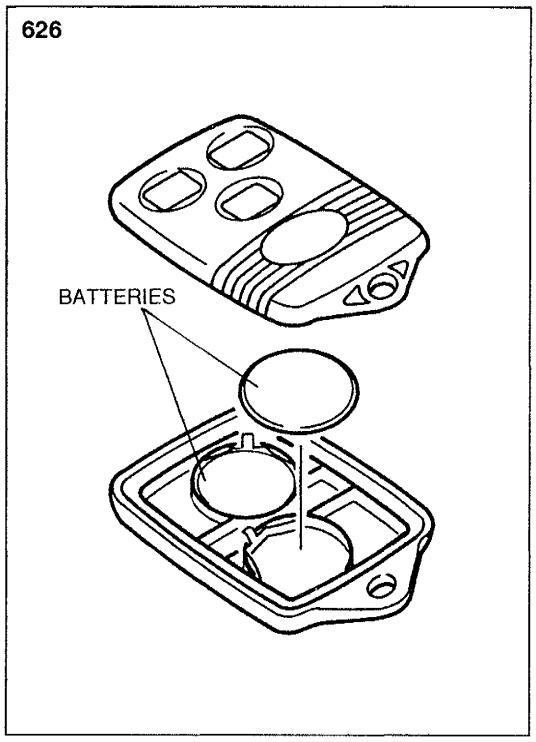

TRANSMITTER

Replacing the Battery

1. Snap apart the transmitter with a thin coin or other suitable tool.
2. Install the new batteries with the ⊖ side facing up.

   Battery specification:
   Lithium CR2016 × 2 or the equivalent

3. Snap the transmitter together.

Note

- The batteries will last about 2 years when used an average of 10 times per day.

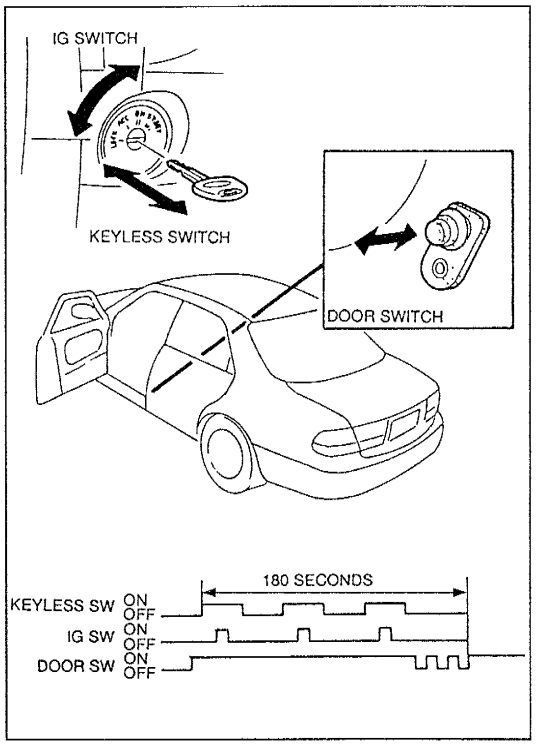

Changing the ID Code

Up to three transmitters can be used with the keyless entry system. If there are three, work with all of them when changing the ID code.

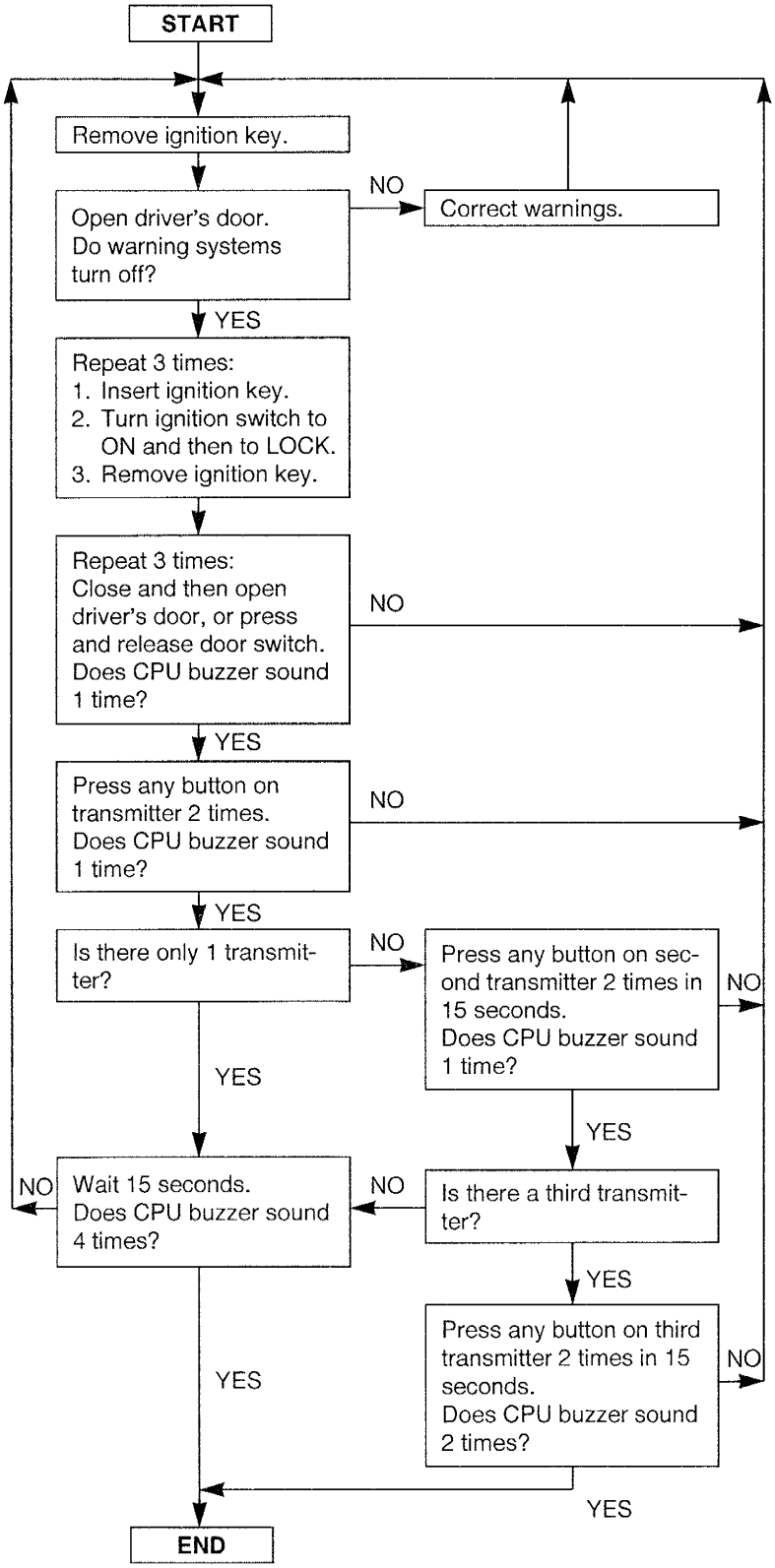

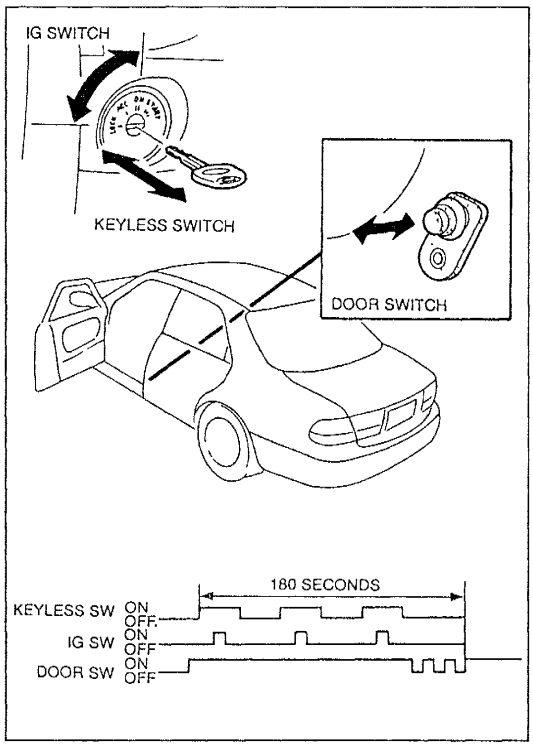

Deleting the ID Code

If you lose a transmitter, you can delete the current ID code by using the following method. Once the ID code is deleted, the previous transmitter cannot be used to operate the keyless entry system.

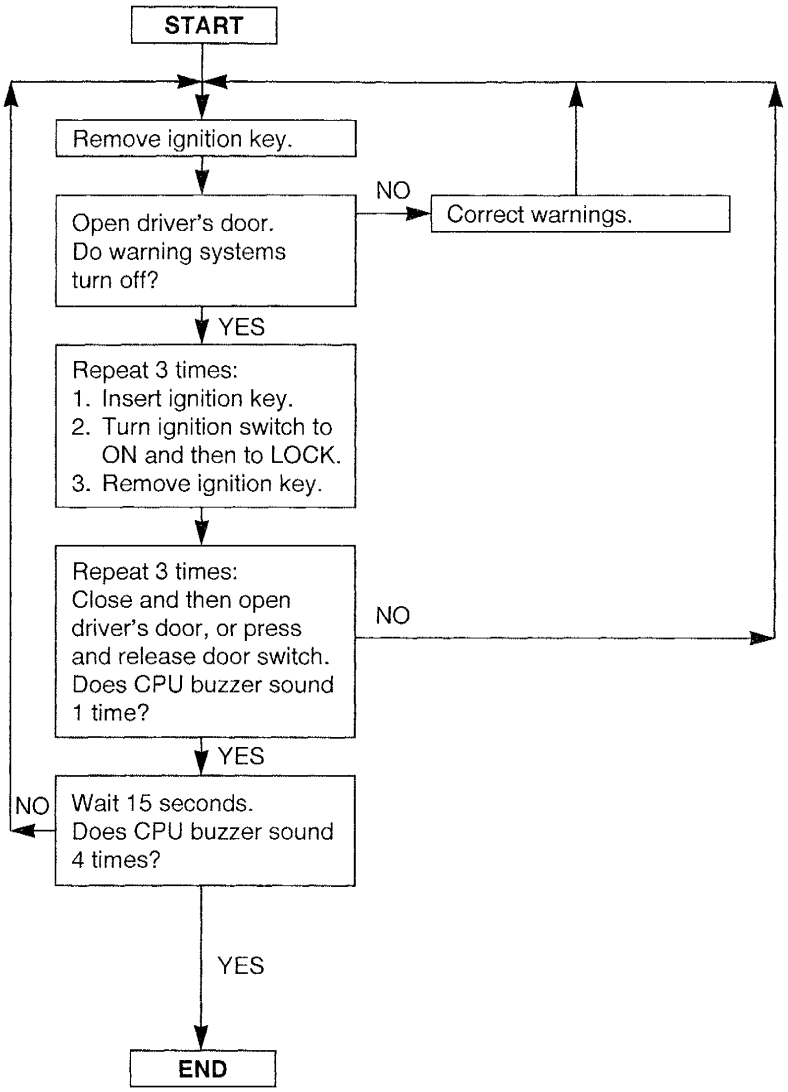

KEYLESS UNIT
Removal / Installation

1. Disconnect the negative battery cable.
2. Open the trunk lid (626) or liftgate (MX-6).
3. Remove as shown in the figure.
4. Install in the reverse order of removal.

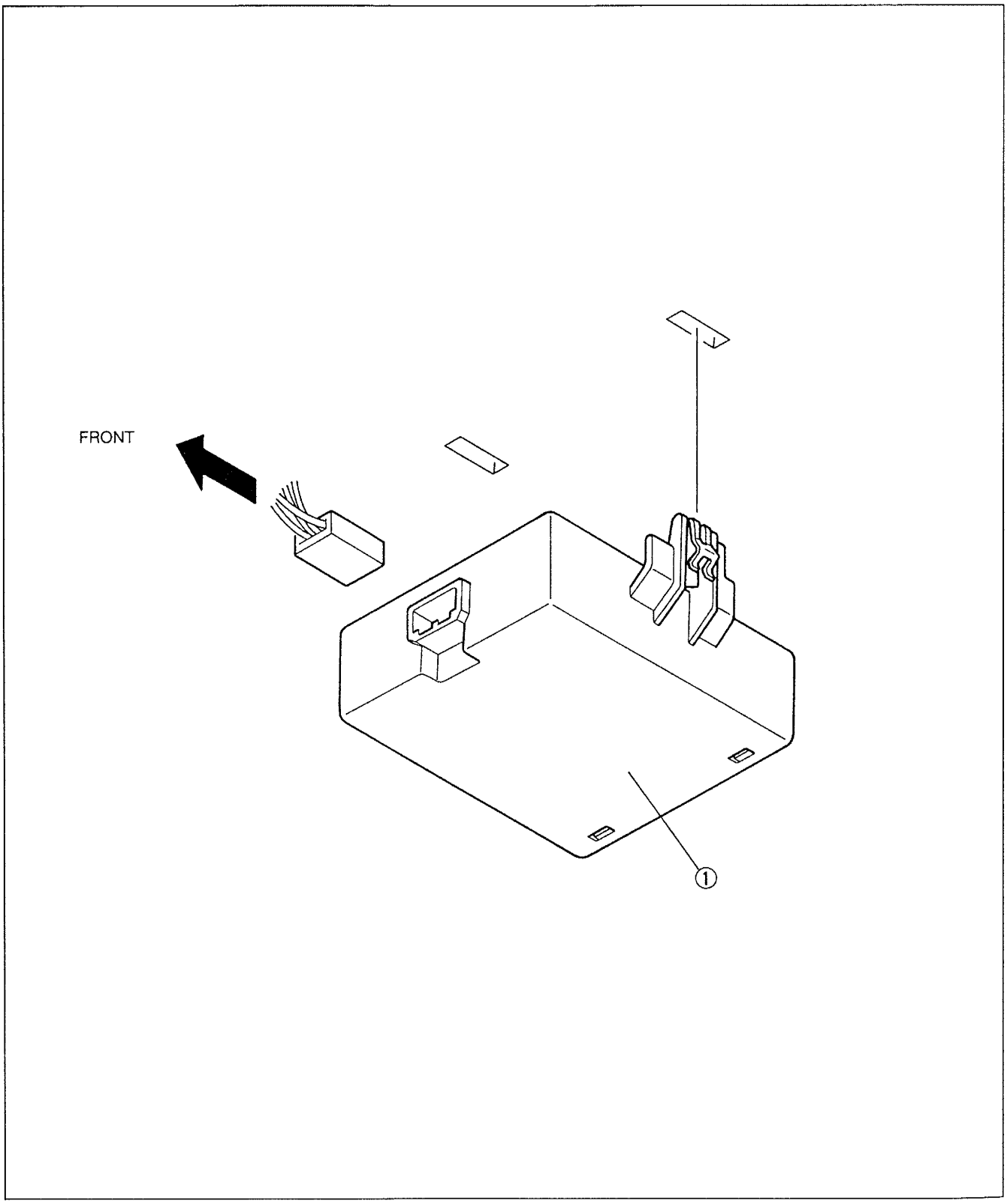

1. Keyless unit

Terminal Voltage List

B+: Battery positive voltage

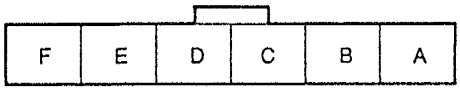

Terminal	Signal name	Connection	Test condition	Voltage
A	Battery	Room 15A fuse	Constant	B+
B	GND	Body ground	Constant	0V
E	Lock signal	CPU	Transmitter LOCK button pressed	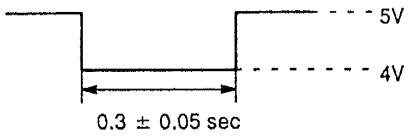
	Unlock signal	CPU	Transmitter UNLOCK button pressed	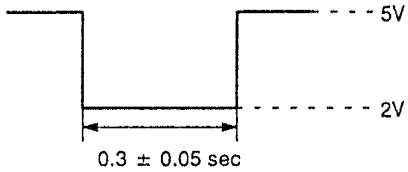
	Trunk signal	CPU	Transmitter TRUNK button pressed	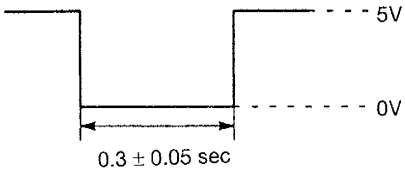

TRUNK LID OPENER RELAY

Removal / Installation

1. Disconnect the negative battery cable.
2. Remove the trunk side trim.
   (Refer to the 1996 626/MX-6 Workshop Manual section S.)
3. Remove as shown in the figure.
4. Install in the reverse order of removal.

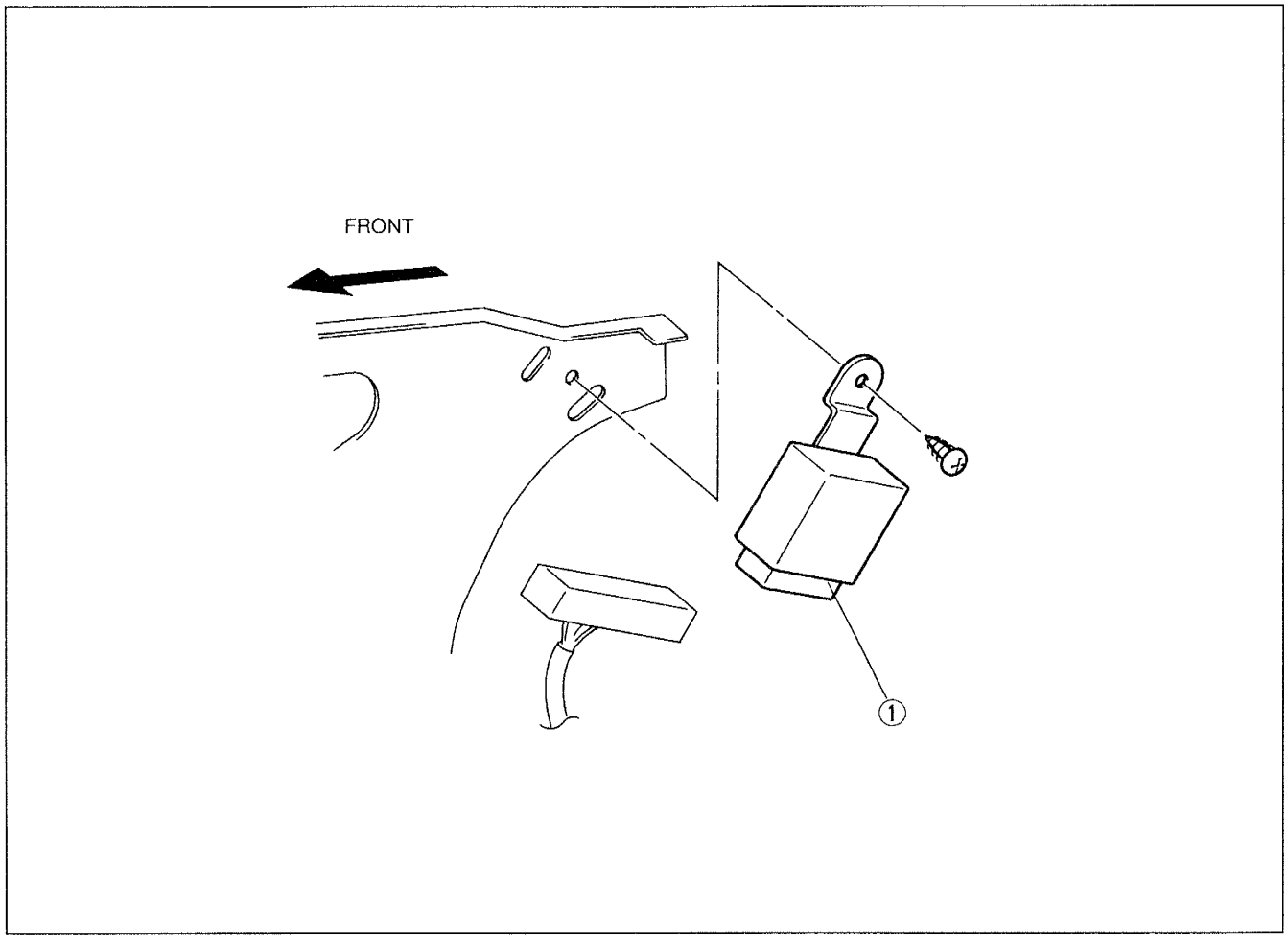

1. Trunk lid opener relay
   Inspection ..... below

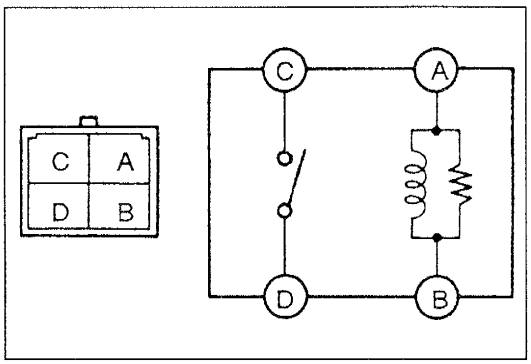

Inspection

1. Remove the trunk lid opener relay. (Refer above.)
2. Apply battery voltage and check for continuity between the relay terminals.

O–O : Continuity B+: Battery positive voltage

Connection		A	B	C	D
B+	GND				
—	—	O—O			
A	B			O—O	

3. If not as specified, replace the trunk lid opener relay.

TRUNK LID ACTUATOR

Removal / Installation

1. Disconnect the negative battery cable.
2. Remove the trunk lid trim.
   (Refer to the 1996 626/MX-6 Workshop Manual section S.)
3. Remove as shown in the figure.
4. Install in the reverse order of removal.

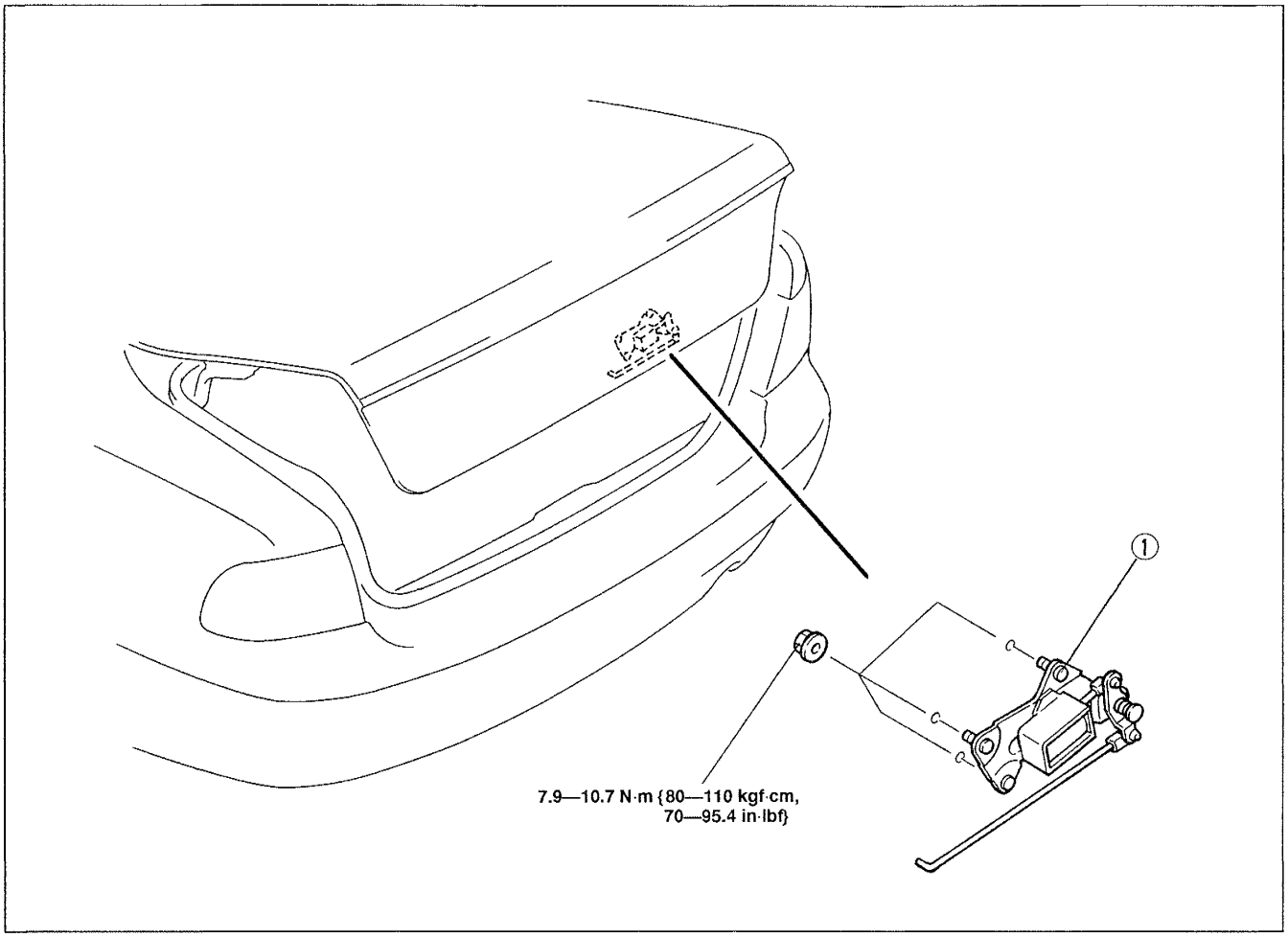

1. Trunk lid actuator
   Inspection ..... below

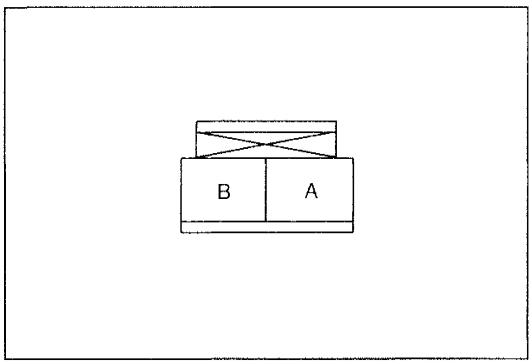

Inspection

1. Remove the trunk lid actuator. (Refer above.)
2. Apply battery voltage to the trunk lid actuator terminals and check the operation of the actuator.

B+: Battery positive voltage

Connection		Actuator operation
B+	GND	
A	B	Lock
B	A	Unlock

3. If not as specified, replace the trunk lid actuator.

Before beginning any service procedure, refer to section S of this manual for air bag system service warnings.

OUTSIDE MIRROR

OUTSIDE MIRROR

STRUCTURAL VIEW

626

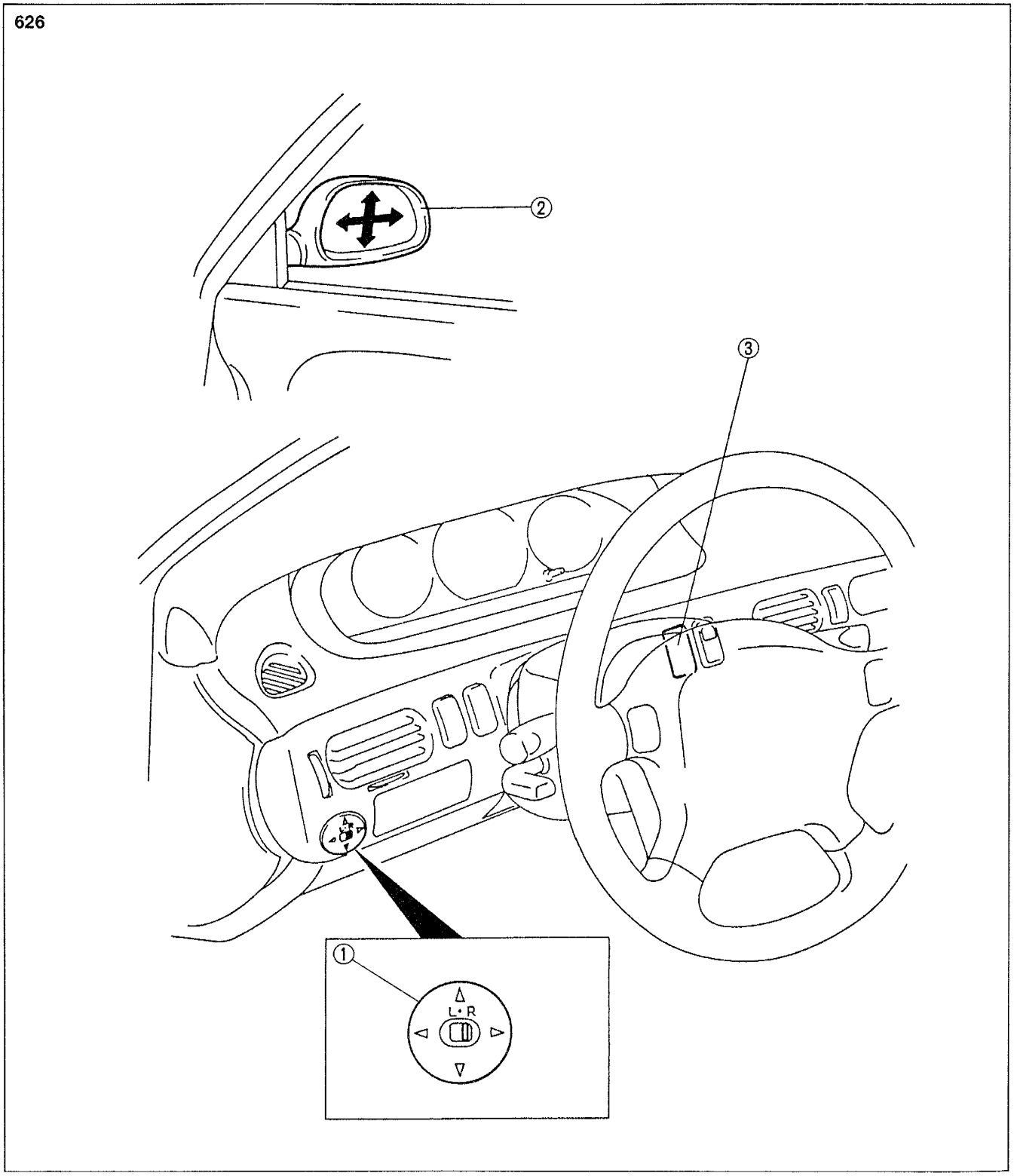

1. Power outside mirror switch
   Inspection..... page L–17
   Removal / Installation..... page L–18
2. Outside mirror
   Inspection..... page L–16
   Removal / Installation..... page L–18
3. Rear window defroster switch
   Inspection..... page L–16
   Removal / Inspection ..... page L–18

MX-6

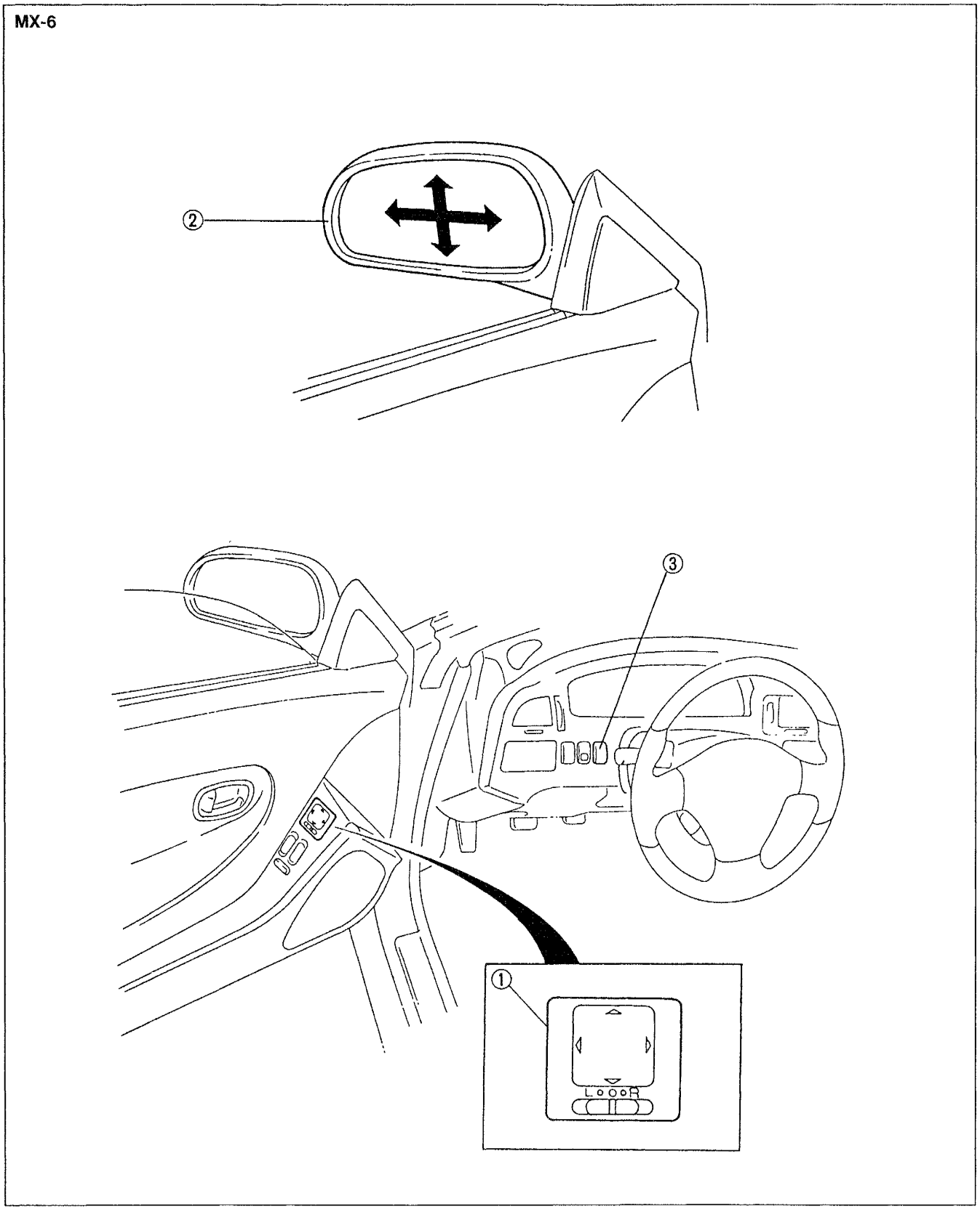

1. Power outside mirror switch
   Inspection..... page L–17
   Removal / Installation..... page L–19
2. Outside mirror
   Inspection..... page L–16
   Removal / Installation..... page L–19
3. Rear window defroster switch
   Inspection..... page L–16
   Removal / Installation..... page L–19

SYSTEM DIAGRAM

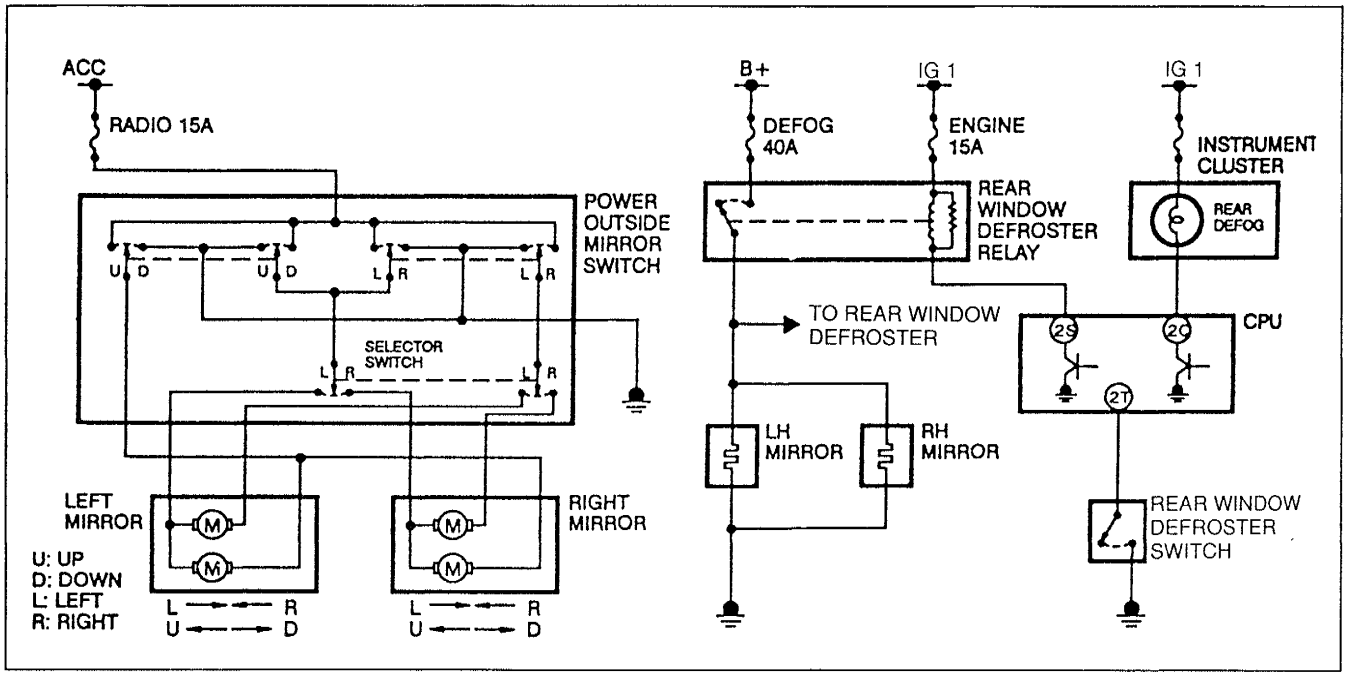

Description

- The power outside mirror system consists of the power outside mirror switch and the power outside mirror motors.
- The heated outside mirror system consists of the rear window defroster switch, rear window defroster relay, CPU, and heater filaments.

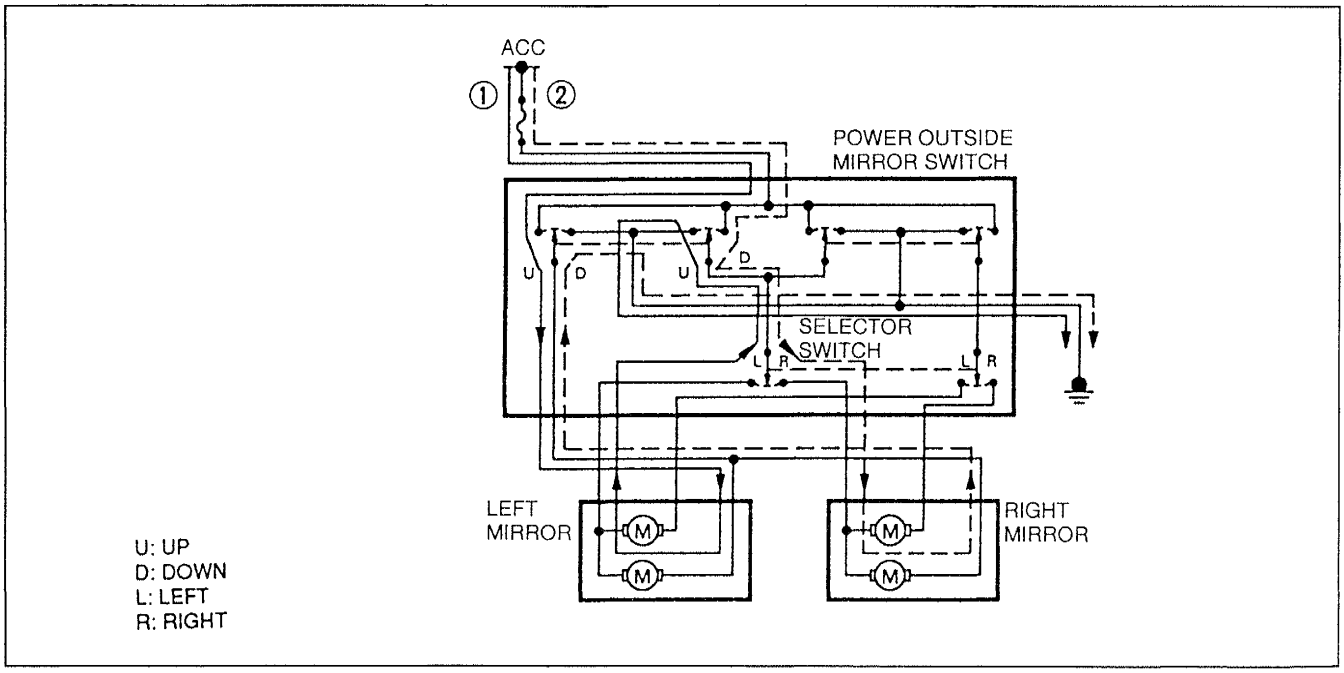

System Operation

1. Vertical adjustment

- When the selector switch is set to the left and the top of the power outside mirror switch is pressed with the ignition switch at ACC, current flows ①, the motor turns, and the left mirror glass moves upward. (Right mirror operation is similar.)
- When the selector switch is set to the right and the bottom of the power outside mirror switch is pressed with the ignition switch at ACC, current flows ②, the motor turns, and the right mirror glass moves downward. (Left mirror operation is similar.)

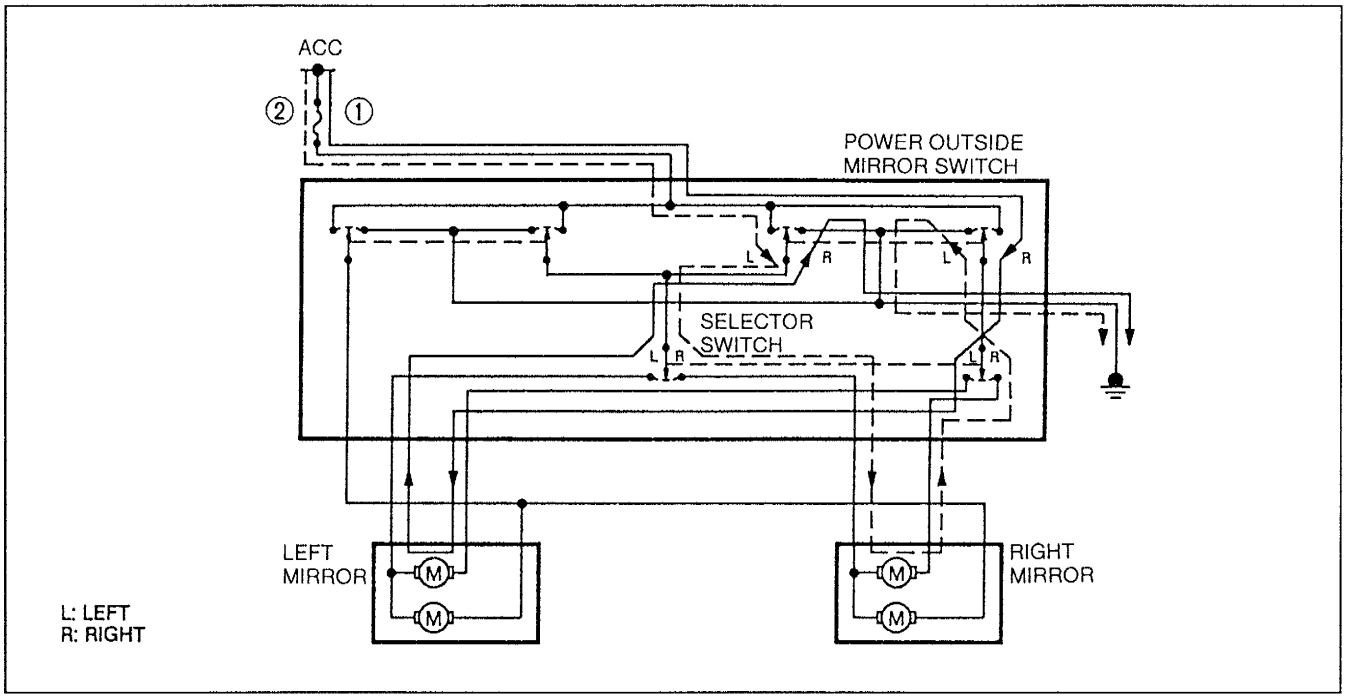

2. Horizontal adjustment

- When the selector switch is set to the left and the right side of the power outside mirror switch is pressed with the ignition switch at ACC, current flows ①, the motor turns, and the left mirror glass moves right. (Right mirror operation is similar.)
- When the selector switch is set to the right and the left side of the power outside mirror switch is pressed with the ignition switch at ACC, current flows ②, the motor turns, and the right mirror glass moves left. (Left mirror operation is similar.)

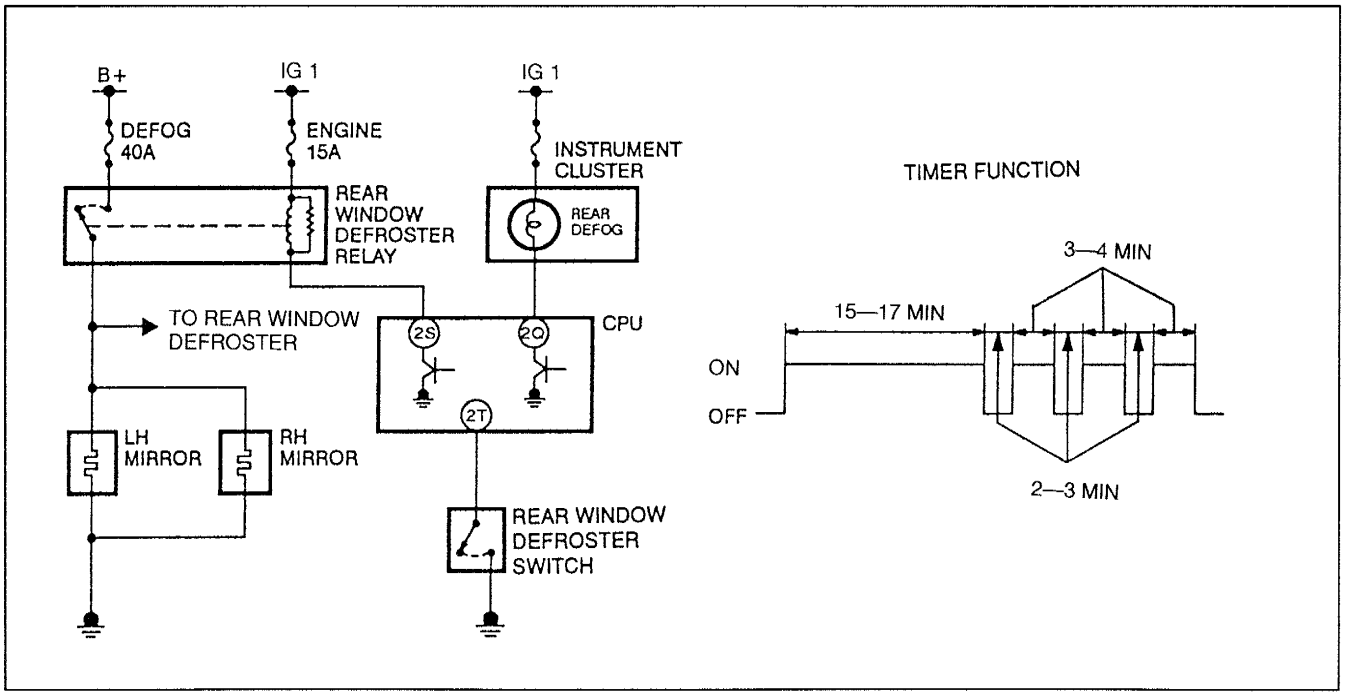

3. Heater

- When the rear window defroster switch is turned on with the ignition switch at ON, the CPU receives the input signal, the relay is turned on, and the heater filament warms.
- The CPU has a timer function that turns the relay on and off to control operation of the heater. When the heater is first turned on, it heats for 15–17 minutes, and then alternates 2–3 minutes off and 3–4 minutes on.

L-1 626 ■ POWER OUTSIDE MIRRORS

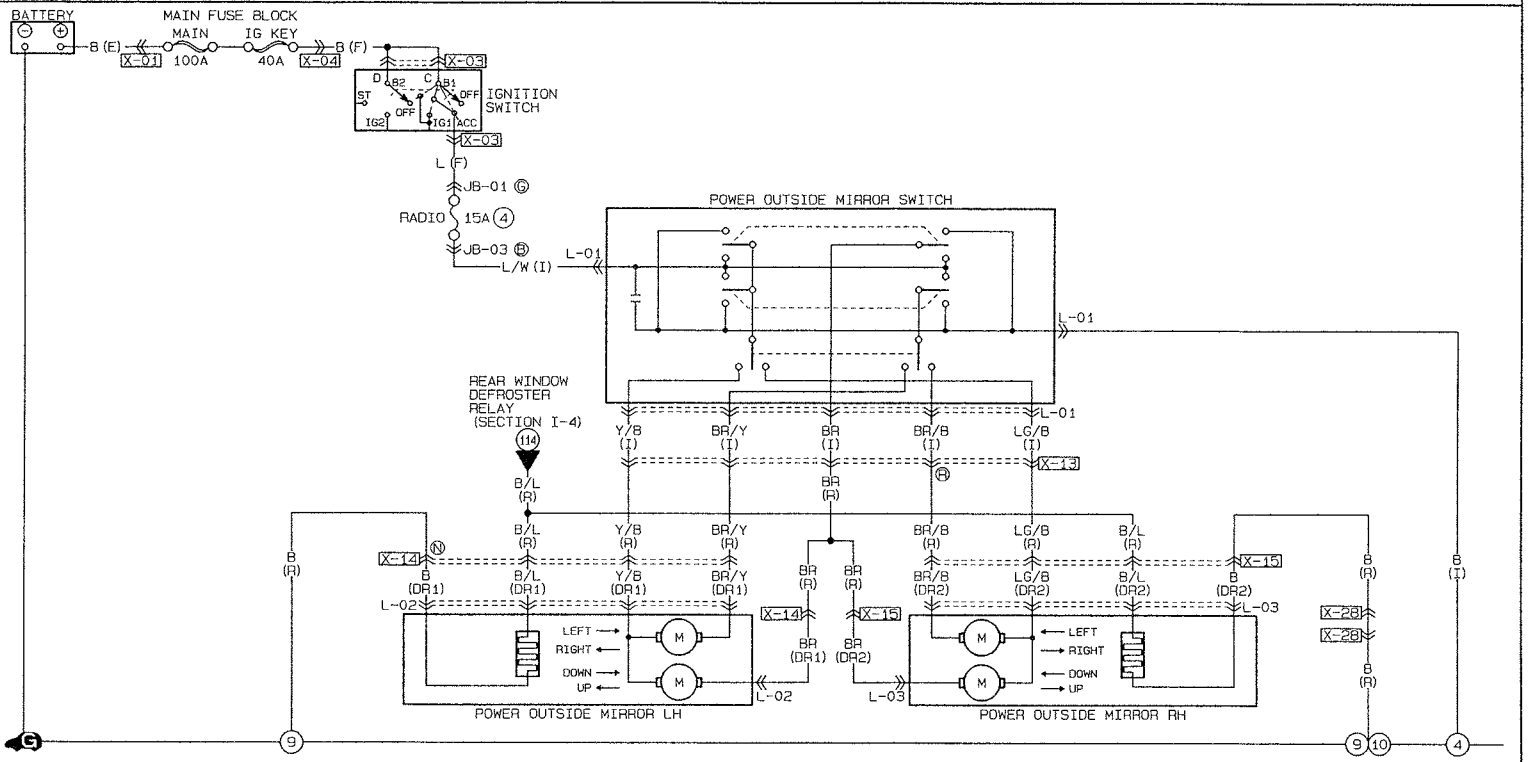

L-01 POWER OUTSIDE MIRROR SWITCH (I)								L-02 POWER OUTSIDE MIRROR LH (DR1)						L-03 POWER OUTSIDE MIRROR RH (DR2)						
*	L/W			Y/B	LG/B			BR			B/L	BR			B/L					
BR	B	BR/Y	BR/B	*	*			Y/B	BR/Y	*	B	LG/B	BR/B	*	B					

Connector Locations (626)

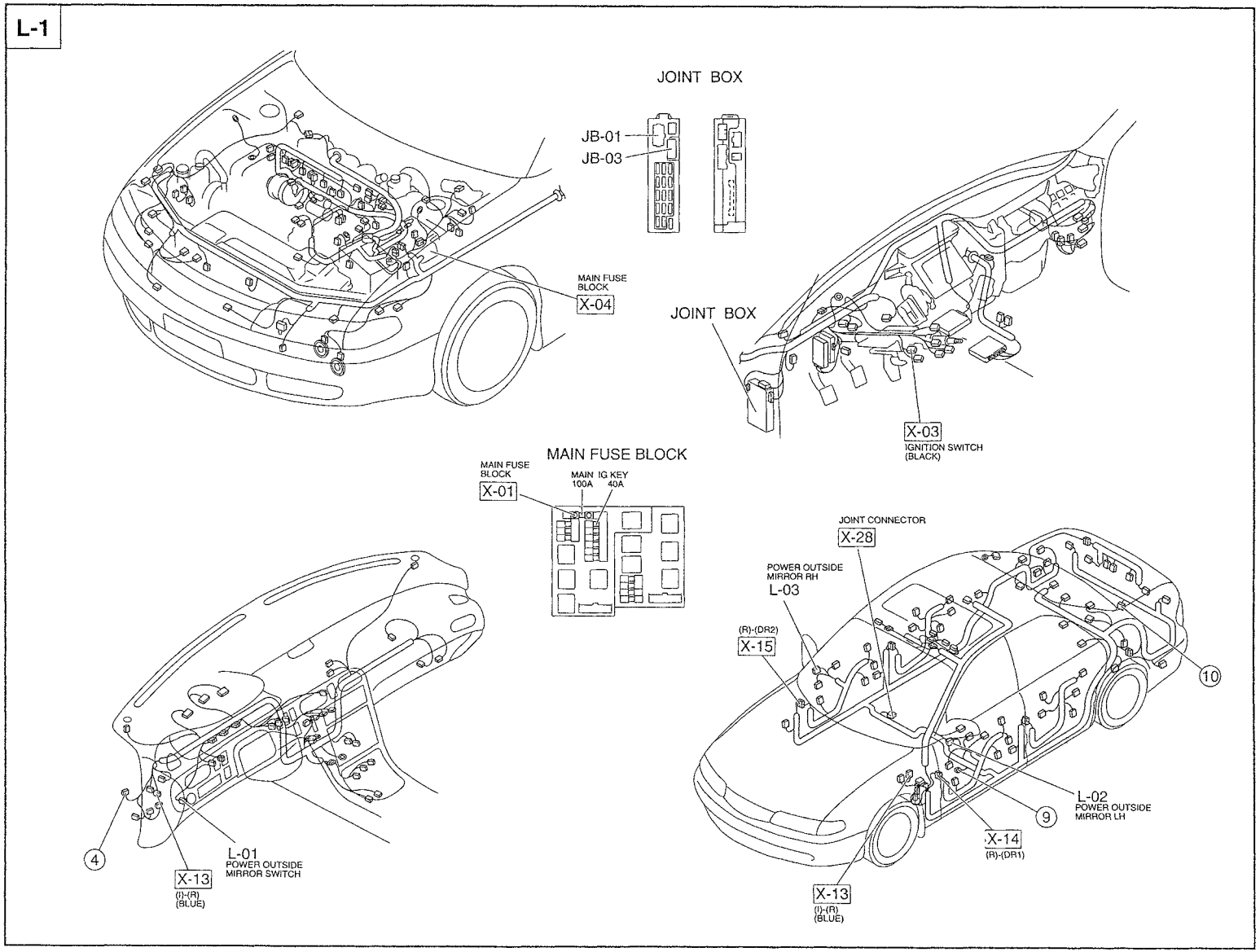

L-2 MX-6 ■POWER OUTSIDE MIRRORS

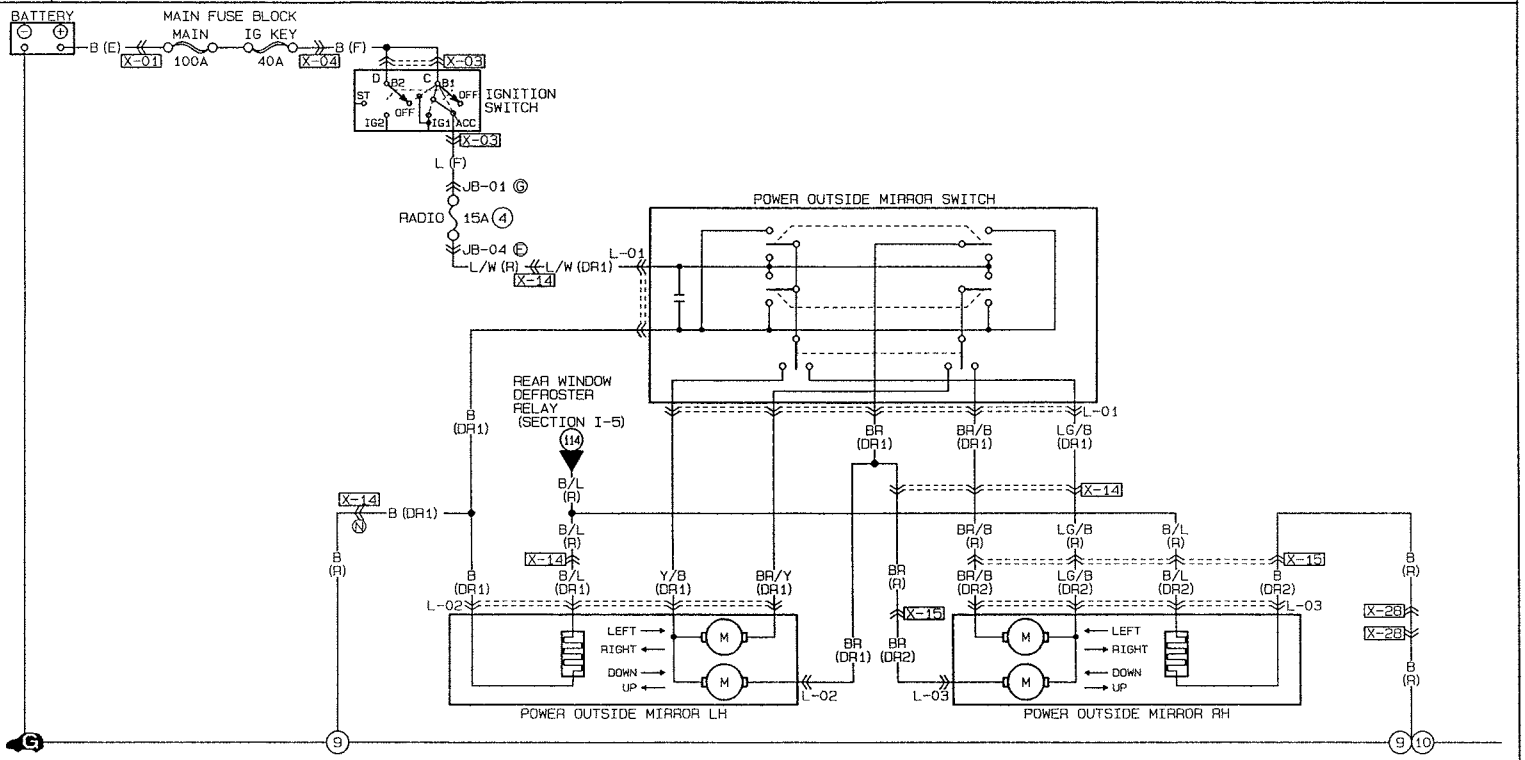

L-01 POWER OUTSIDE MIRROR SWITCH (DR1)					
BR	L/W			LG/B	Y/B
B	*	*	*	BR/Y	BR/B

L-02 POWER OUTSIDE MIRROR LH (DR1)					
BR	Y/B	BR/Y	*	B/L	B

L-03 POWER OUTSIDE MIRROR RH (DR2)					
BR	LG/B	BR/B	*	B/L	B

Connector Locations (MX-6)

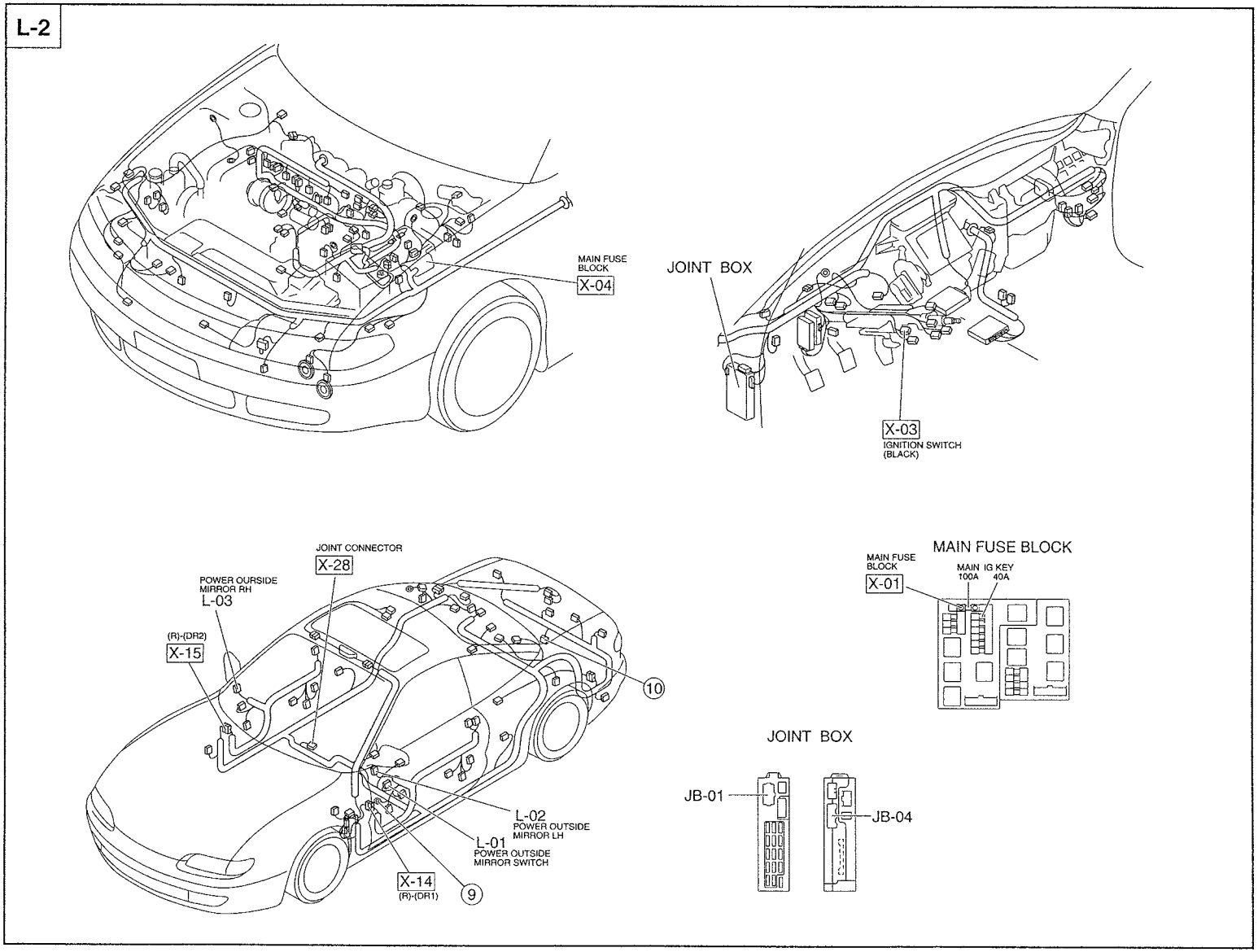

Checklist

	Procedure / Proper operation	Symptom	Flowchart No.
1	Operate power outside mirror switch and verify that outside mirrors move vertically and horizontally.	Power outside mirrors do not operate	1
		One power outside mirror does not operate	2
		Right power outside mirror does not move vertically or horizontally	
		Left power outside mirror does not move vertically or horizontally	
2	Operate rear window defroster switch and verify that heated outside mirrors operate.	Heated outside mirrors do not operate (rear window defroster does not operate)	3
		Heated outside mirrors do not operate (rear window defroster operates)	4
		One heated outside mirror does not operate	

Flowchart No.1	Symptom	Power outside mirrors do not operate

Possible cause
- Burnt RADIO 15A fuse
- Damaged power outside mirror switch
- Damaged outside mirror
- Open or short circuit in wiring harness
- Poor connection of connector

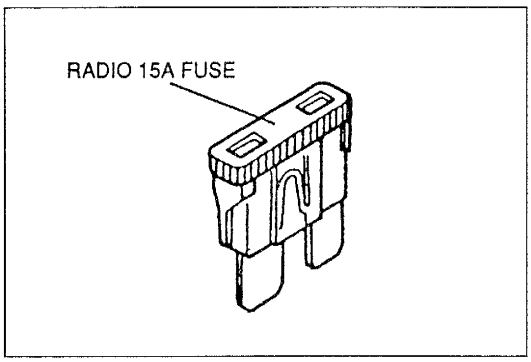

Step 1
Check the RADIO 15A fuse in the fuse block.

Fuse	Action
OK	Go to Step 2
Burnt	Replace fuse after checking and repairing the wiring harness

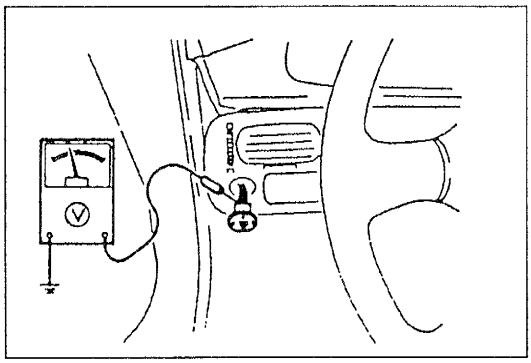

Step 2
1. Remove the power outside mirror switch. (Refer to page L–18 or L–19.)
2. Turn the ignition switch to ACC.
3. Measure the voltage at the (L/W) terminal wire of the power outside mirror switch connector.

B+: Battery positive voltage

Voltage	Action
B+	Go to Step 3
Other	Repair wiring harness (Fuse block—Power outside mirror switch)

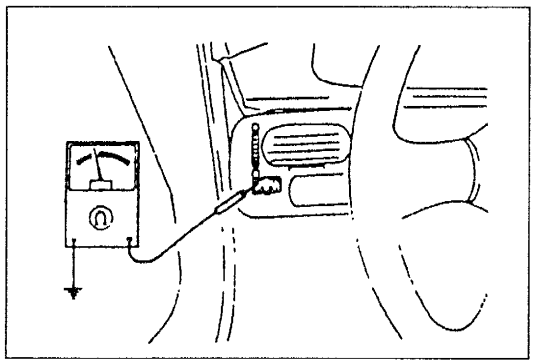

Step 3

1. Turn the ignition switch to OFF.
2. Disconnect the power outside mirror switch connector and check for continuity between the (B) terminal wire of the connector and ground.

Continuity	Action
Yes	Reconnect connector and go to Step 4
No	Repair wiring harness (Power outside mirror switch—GND)

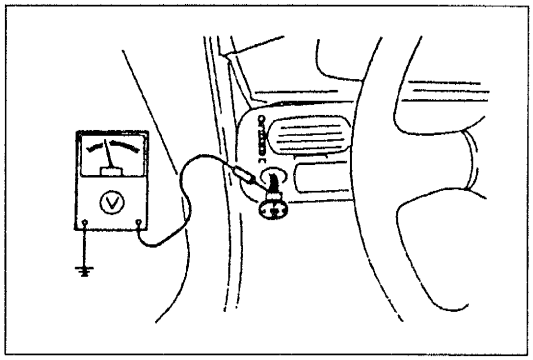

Step 4

1. Turn the ignition switch to ACC.
2. Measure the voltage at the terminal wires of the power outside mirror switch connector with the power outside mirror switch in the following positions.

B+: Battery positive voltage

Switch position		Terminal	Voltage
Right	UP	(BR) wire	B+
	DOWN	(LG/B) wire	B+
	LEFT	(LG/B) wire	B+
	RIGHT	(BR/B) wire	B+
Left	UP	(BR) wire	B+
	DOWN	(Y/B) wire	B+
	LEFT	(Y/B) wire	B+
	RIGHT	(BR/Y) wire	B+

3. If correct, go to Step 5.
4. If not as specified, check the power outside mirror switch. (Refer to page L–17.)

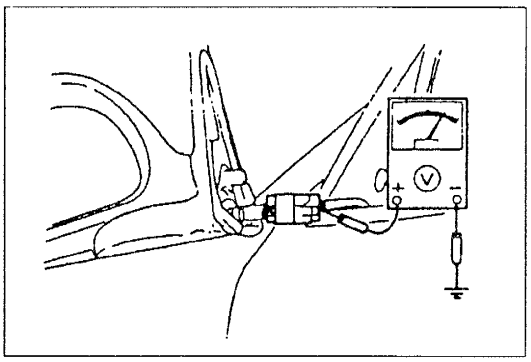

Step 5

1. Remove the outside mirror.
   (Refer to page L–18 or L–19.)
2. Measure the voltage at the terminal wires of the outside mirror connector with the power outside mirror switch in the following positions.

B+: Battery positive voltage

Switch position		Terminal	Voltage
Right	UP	(BR) wire	B+
	DOWN	(LG/B) wire	B+
	LEFT	(LG/B) wire	B+
	RIGHT	(BR/B) wire	B+
Left	UP	(BR) wire	B+
	DOWN	(Y/B) wire	B+
	LEFT	(Y/B) wire	B+
	RIGHT	(BR/Y) wire	B+

3. If correct, check the outside mirror.
   (Refer to page L–16.)
4. If not as specified, repair the wiring harness (power outside mirror switch—outside mirror).

Flowchart No. 2	Symptom	One power outside mirror does not operate
		Right power outside mirror does not move vertically or horizontally
		Left power outside mirror does not move vertically or horizontally

Possible cause
- Damaged power outside mirror switch
- Damaged outside mirror
- Open or short circuit in wiring harness
- Poor connection of connector

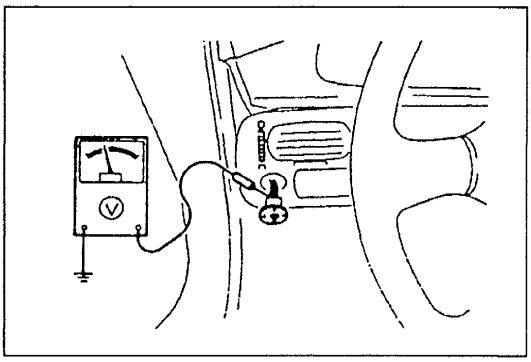

Step 1
1. Remove the power outside mirror switch. (Refer to page L–18 or L–19.)
2. Turn the ignition switch to ACC.
3. Measure the voltage at the terminal wires of the power outside mirror switch connector with the power outside mirror switch in the following positions.

B+: Battery positive voltage

Switch position		Terminal	Voltage
Right	UP	(BR) wire	B+
	DOWN	(LG/B) wire	B+
	LEFT	(LG/B) wire	B+
	RIGHT	(BR/B) wire	B+
Left	UP	(BR) wire	B+
	DOWN	(Y/B) wire	B+
	LEFT	(Y/B) wire	B+
	RIGHT	(BR/Y) wire	B+

4. If correct, go to Step 2.
5. If not as specified, check the power outside mirror switch. (Refer to page L–17.)

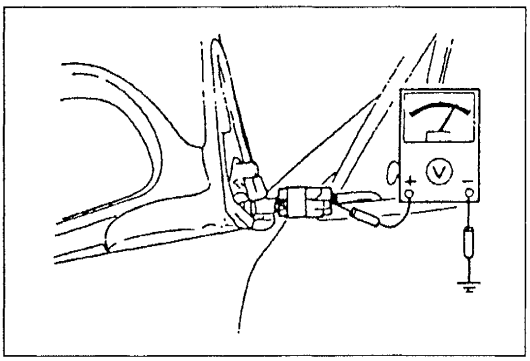

Step 2
1. Remove the outside mirror. (Refer to page L–18 or L–19.)
2. Measure the voltage at the terminal wires of the outside mirror connector with the power outside mirror switch in the following positions.

B+: Battery positive voltage

Switch position		Terminal	Voltage
Right	UP	(BR) wire	B+
	DOWN	(LG/B) wire	B+
	LEFT	(LG/B) wire	B+
	RIGHT	(BR/B) wire	B+
Left	UP	(BR) wire	B+
	DOWN	(Y/B) wire	B+
	LEFT	(Y/B) wire	B+
	RIGHT	(BR/Y) wire	B+

3. If correct, check the outside mirror. (Refer to page L–16.)
4. If not as specified, repair the wiring harness (power outside mirror switch—outside mirror).

Flowchart No. 3	Symptom	Heated outside mirrors do not operate (rear window defroster does not operate)

Possible cause
- Burnt ENGINE 15A fuse
- Burnt DEFOG 40A fuse
- Damaged rear window defroster relay
- Damaged rear window defroster switch
- Damaged heated outside mirror
- Damaged CPU
- Open or short circuit in wiring harness
- Poor connection of connector

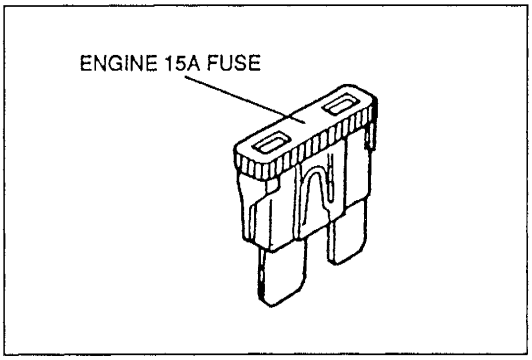

Step 1
Check the ENGINE 15A fuse in the fuse block.

Fuse	Action
OK	Go to Step 2
Burnt	Replace fuse after checking and repairing wiring harness

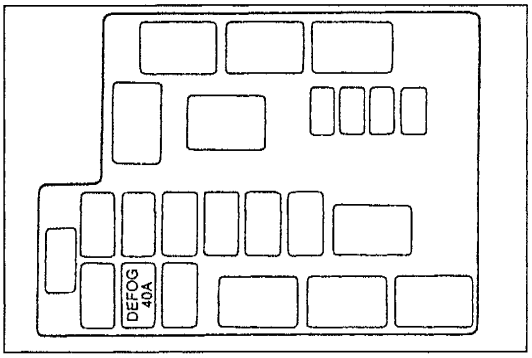

Step 2
Check the DEFOG 40A fuse in the main fuse block.

Fuse	Action
OK	Go to Step 3
Burnt	Replace fuse after checking and repairing wiring harness

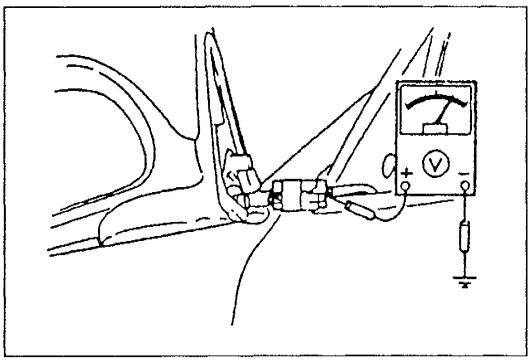

Step 3
1. Turn the ignition switch to ON.
2. Turn on the rear window defroster switch.
3. Measure the voltage at the (B/L) terminal wire of the outside mirror connector.

B+: Battery positive voltage

Voltage	Action
B+	Go to Step 4
Other	Go to Step 5

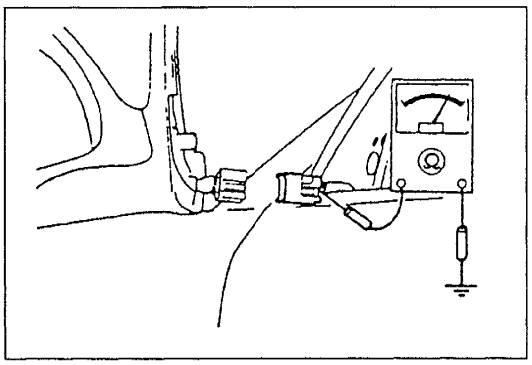

Step 4
1. Turn the ignition switch to OFF.
2. Disconnect the outside mirror connector and check for continuity between the (B) terminal wire of the outside mirror connector and ground.

Continuity	Action
Yes	Check outside mirror (Refer to page L–16)
No	Repair wiring harness (Outside mirror—GND)

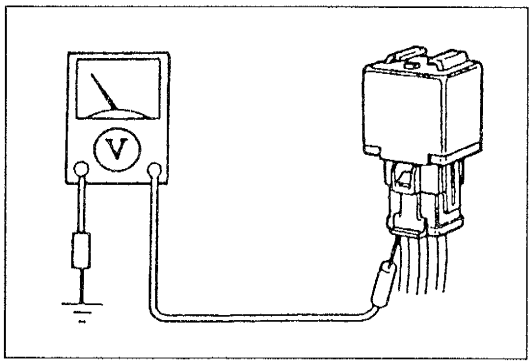

Step 5

Measure the voltage at the (B/W) terminal wire of the rear window defroster relay connector.

B+: Battery positive voltage

Voltage	Action
B+	Go to Step 6
Other	Repair wiring harness (ENGINE 15A fuse—Rear window defroster relay)

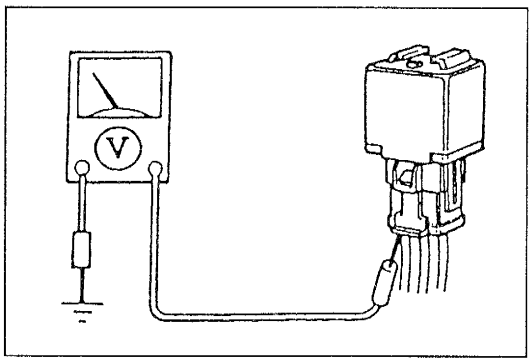

Step 6

Measure the voltage at the (B/W) terminal wire of the rear window defroster relay connector.

B+: Battery positive voltage

Voltage	Action
B+	Go to Step 7
Other	Repair wiring harness (DEFOG 40A fuse—Rear window defroster relay)

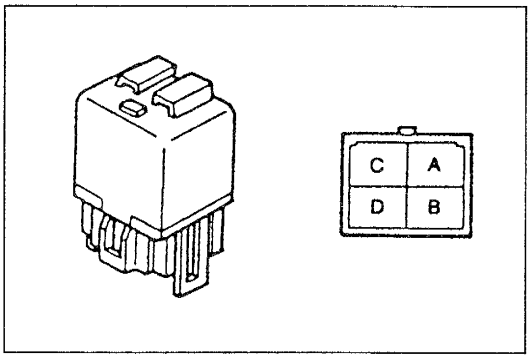

Step 7

1. Turn the ignition switch to OFF.
2. Disconnect the rear window defroster relay connector.
3. Check for continuity between the terminals of the relay while applying battery positive voltage as indicated below.

O—O : Continuity B+: Battery positive voltage

	Terminal			
Step	A	B	C	D
1	O—O			
2	B+	GND	O—O	

4. If correct, reconnect the relay and go to Step 8.
5. If not as specified, replace the relay.

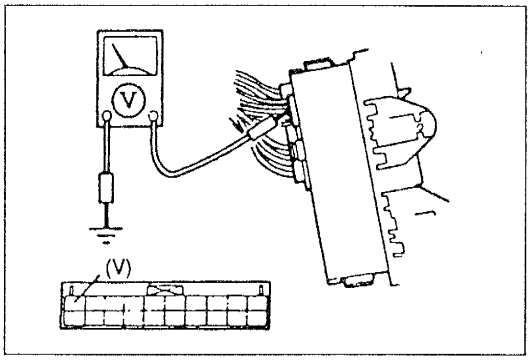

Step 8

1. Turn the ignition switch to ON.
2. Measure the voltage at the (V) terminal wire of the CPU connector (20-pin).

B+: Battery positive voltage

Voltage	Action
B+	Go to Step 9
Other	Repair wiring harness (Rear window defroster relay—CPU)

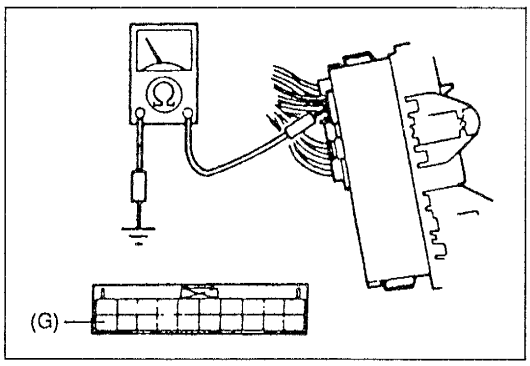

Step 9

1. Turn the ignition switch to OFF.
2. Disconnect the CPU connector (20-pin).
3. Turn the rear window defroster switch to ON.
4. Check for continuity between the (G) terminal wire of the CPU connector and ground.

Continuity	Action
Yes	Replace CPU (Refer to section Z3)
No	Go to Step 10

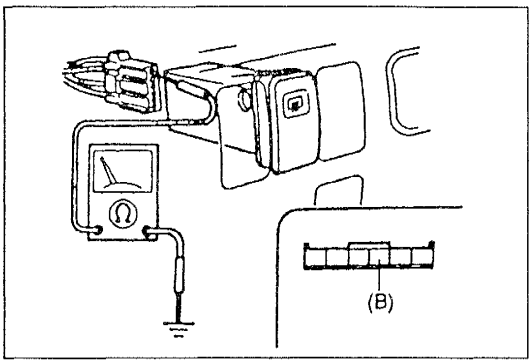

Step 10
1. Remove the rear window defroster switch. (Refer to page L–18 or L–19.)
2. Disconnect the rear window defroster switch connector.
3. Check for continuity between the (B) terminal wire of the rear window defroster switch connector and ground.

Continuity	Action
Yes	Go to Step 11
No	Repair wiring harness (Rear window defroster switch—GND)

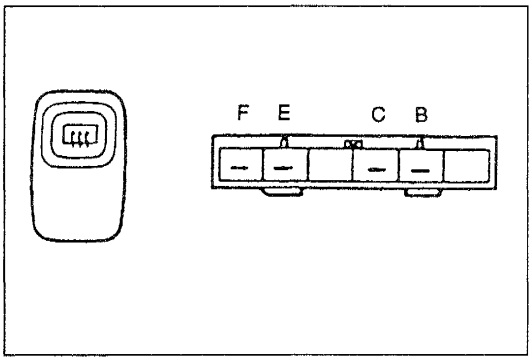

Step 11
1. Check for continuity between the terminals of the rear window defroster switch.

O—O : Continuity

Switch position \ Terminal	B	C	E	F
OFF			O—O	
ON	O—O		O—O	

2. If correct, repair the wiring harness (CPU—rear window defroster switch).
3. If not as specified, replace the rear window defroster switch.

Flowchart No. 4	Symptom	Heated outside mirrors do not operate (rear window defroster operates)
		One heated outside mirror does not operate

Possible cause
- Damaged heated outside mirror
- Open or short circuit in wiring harness
- Poor connection of connector

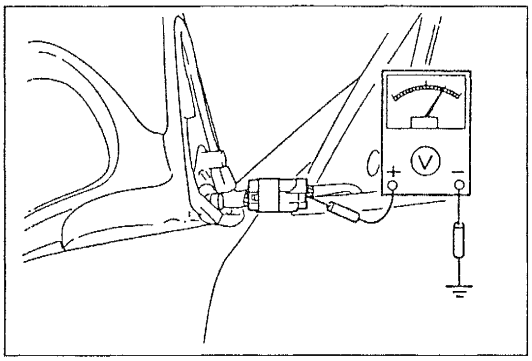

Step 1
1. Turn the ignition switch to ON.
2. Turn on the rear window defroster switch.
3. Measure the voltage at the (B/L) terminal wire of the outside mirror connector.

B+: Battery positive voltage

Voltage	Action
B+	Go to Step 2
Other	Repair wiring harness (Rear window defroster relay—Outside mirror)

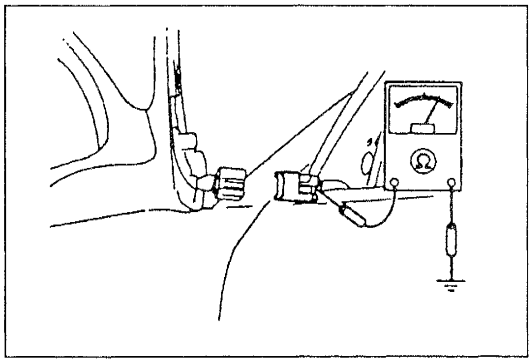

Step 2
1. Turn the ignition switch to OFF.
2. Disconnect the outside mirror connector.
3. Check for continuity between the (B) terminal wire of the outside mirror connector and ground.

Continuity	Action
Yes	Check outside mirror (Refer to page L–16)
No	Repair wiring harness (Outside mirror—GND)

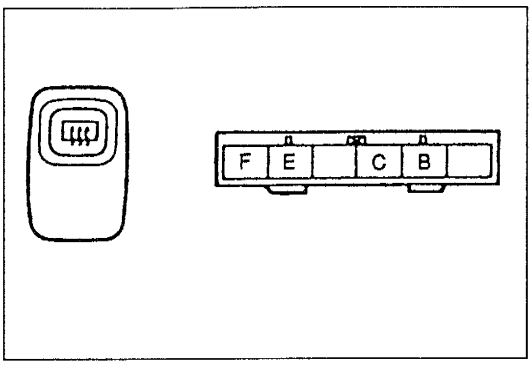

REAR WINDOW DEFROSTER SWITCH

Inspection

1. Remove the rear window defroster switch.
   (Refer to page L–18 or L–19.)
2. Check for continuity between the switch terminals.

O–O : Continuity

Switch position \ Terminal	B	C	E	F
OFF			O–O	
ON	O–O		O–O	

3. If not as specified, replace the rear window defroster switch.

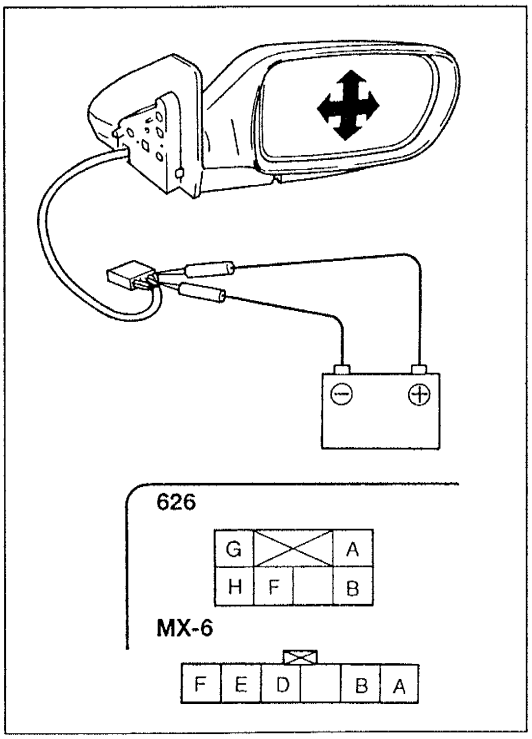

OUTSIDE MIRROR

Inspection

1. Remove the outside mirror.
   (Refer to page L–18 or L–19.)
2. Apply battery positive voltage and check the operation of the outside mirror.

B+: Battery positive voltage

Connection				Mirror operation
626		MX-6		
B+	GND	B+	GND	
G	H	F	E	Up
H	G	E	F	Down
H	F	E	D	Left
F	H	D	E	Right

3. Check for continuity between the mirror terminals.

O–O : Continuity

Function \ Terminal	626		MX-6	
	A	B	A	B
Heater	O–O		O–O	

4. If not as specified, replace the outside mirror.

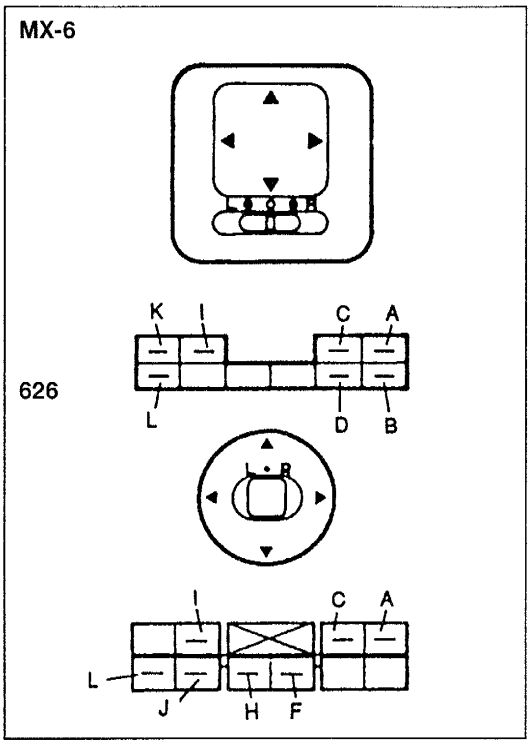

POWER OUTSIDE MIRROR SWITCH

Inspection

1. Remove the power outside mirror switch. (Refer to page L–18 or L–19.)
2. Check for continuity between the switch terminals.

626

○–○ : Continuity

Switch position \ Terminal		A	C	F	H	I	J	L
Left	UP		○		○	○	○	○
	DOWN		○			○	○	○
	LEFT		○		○	○	○	
	RIGHT		○		○	○	○	○
Right	UP	○		○		○	○	○
	DOWN	○				○	○	○
	LEFT	○		○		○	○	
	RIGHT	○		○		○	○	○

MX-6

○–○ : Continuity

Switch position \ Terminal		A	B	C	D	I	K	L
Left	UP	○				○	○	○
	DOWN	○				○	○	○
	LEFT	○			○	○		○
	RIGHT	○			○	○		○
Right	UP			○		○	○	○
	DOWN			○		○	○	○
	LEFT		○	○		○		○
	RIGHT		○	○		○		○

3. If not as specified, replace the power outside mirror switch.

COMPONENTS

Removal / Installation

1. Disconnect the negative battery cable.
2. Remove in the order shown in the figure. To remove the switches, remove the switch panel. (Refer to the 1996 626/MX-6 Workshop Manual, section S.)
3. Install in the reverse order of removal.

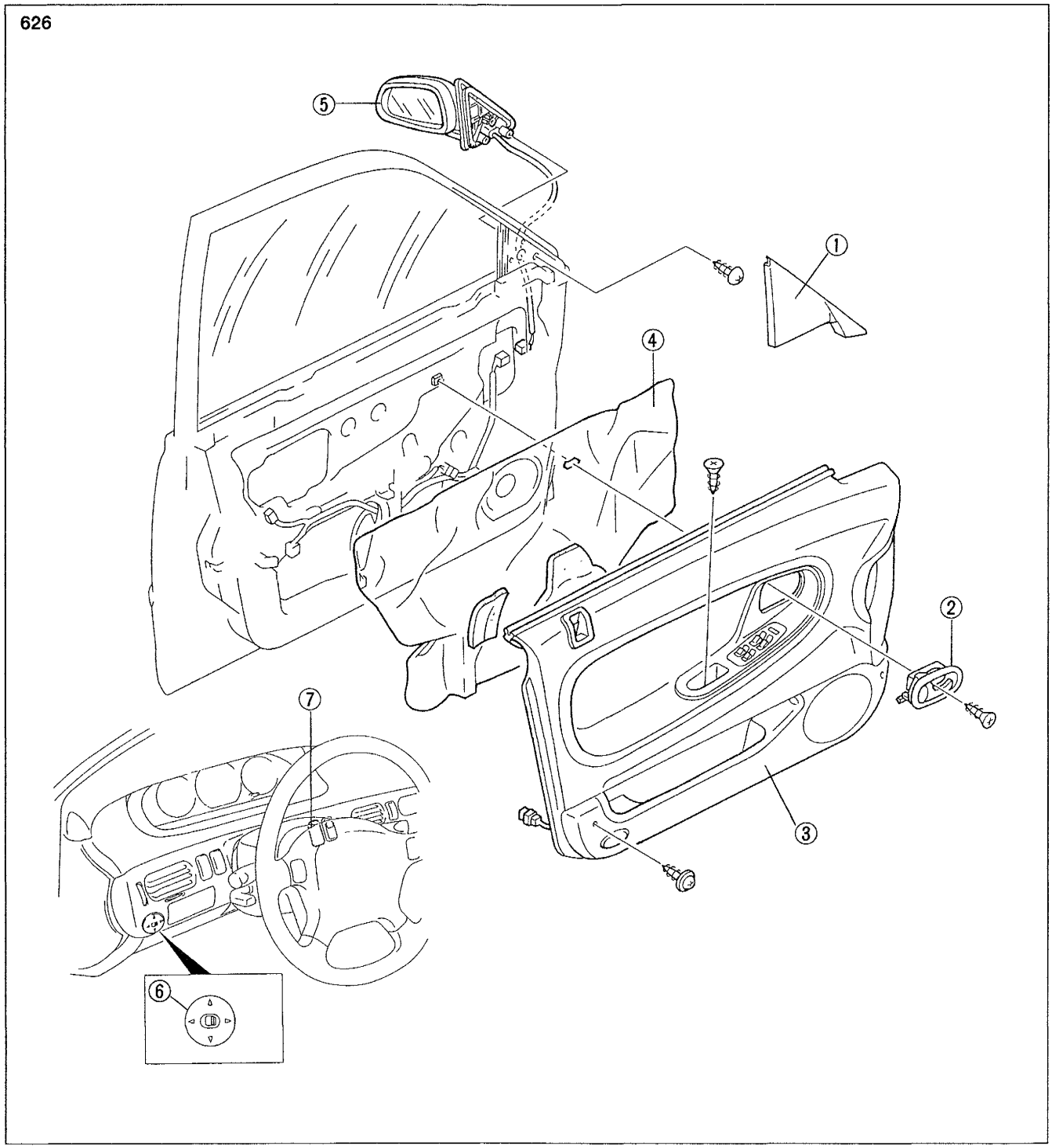

1. Inner garnish
2. Inner handle
3. Front door trim
4. Door screen
5. Outside mirror
   Inspection..... page L–16
6. Power outside mirror switch
   Inspection..... page L–17
7. Rear window defroster switch
   Inspection..... page L–16

Removal / Inspection

1. Disconnect the negative battery cable.
2. Remove in the order shown in the figure. To remove the rear window defroster switch, remove the meter hood. (Refer to the 1996 626/MX-6 Workshop Manual, section S.)
3. Install in the reverse order of removal.

MX-6

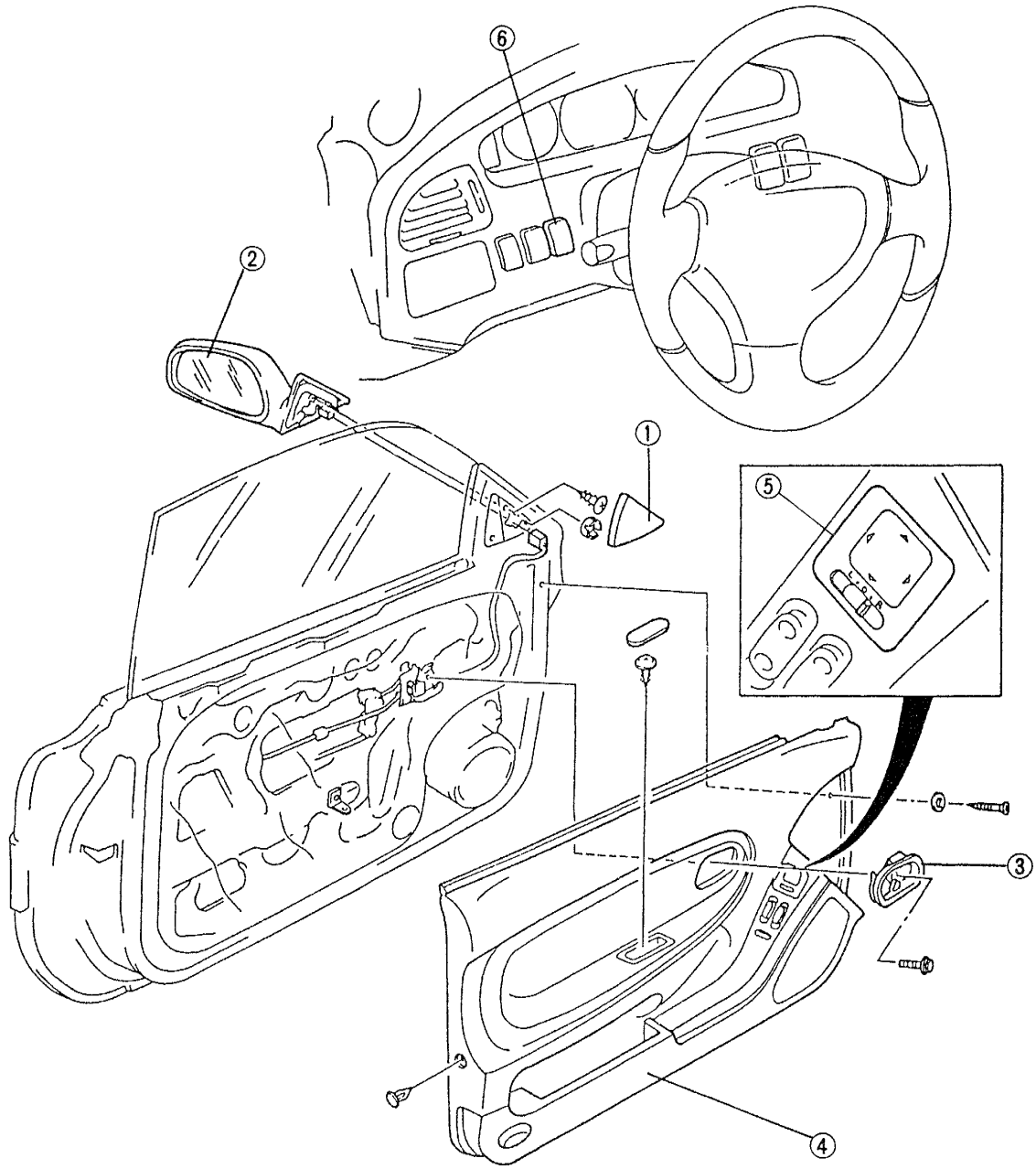

1. Inner garnish
2. Outside mirror
   Inspection..... page L–16
3. Inner handle cover
4. Door trim
5. Power outside mirror switch
   Inspection..... page L–17
6. Rear window defroster switch
   Inspection..... page L–16

INNER SLIDING SUNROOF

INNER SLIDING SUNROOF

STRUCTURAL VIEW

626

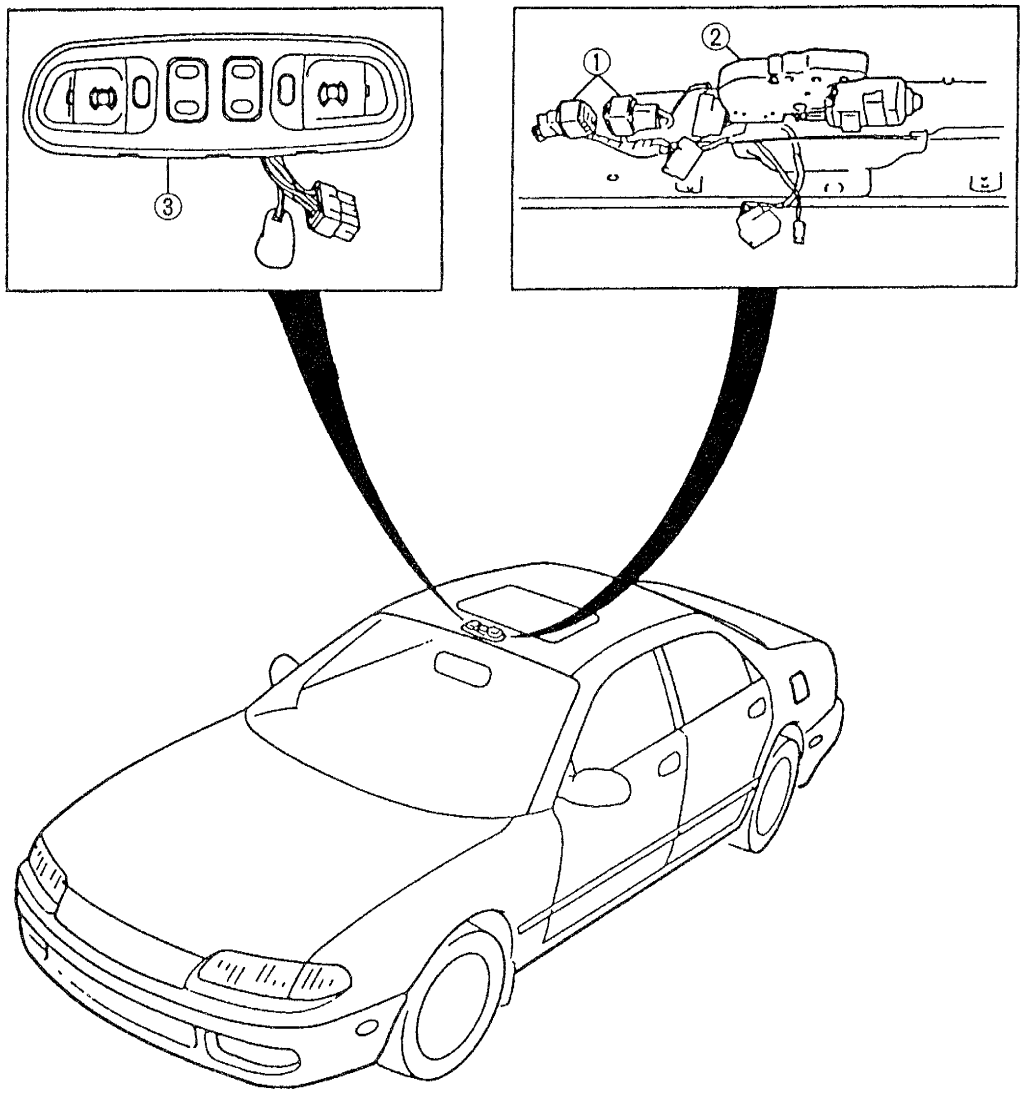

1. Sunroof relay
   Inspection..... page M1–10
   Removal / Installation..... page M1–11
2. Sunroof motor assembly
   Inspection..... page M1–10
   Removal / Installation..... page M1–11
3. Sunroof switch (within overhead console)
   Inspection..... page M1–10
   Removal / Installation..... page M1–11

SYSTEM DIAGRAM

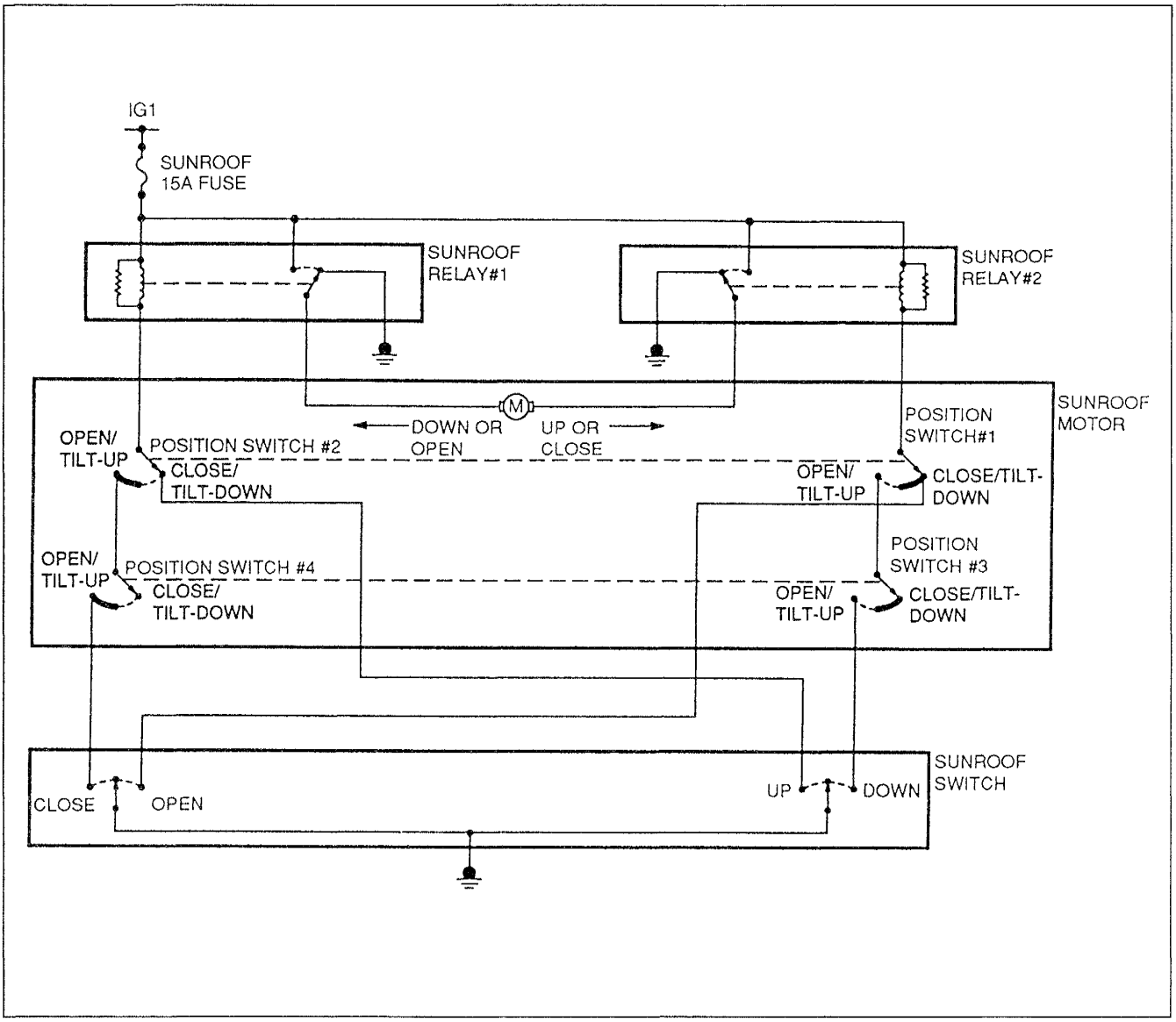

Description

The inner sliding sunroof system consists of the sunroof switch, sunroof motor, and sunroof relays #1 and #2.

System Operation

1. Slide open

When the sunroof is closed, position switch #1 is in the closed position. When the sunroof switch is moved to the open position, ground is applied to the sunroof relay #2 coil through position switch #1. Sunroof relay #2 energizes and applies voltage to the sunroof motor through its contacts. The sunroof motor runs since it is grounded through the sunroof relay #1 switch contact. The sunroof motor operates until position switch #1 reaches the open/tilt-up position to interrupt the sunroof relay #2 ground path.

2. Slide close

When the sunroof is opened, position switches #2 and #4 are in the open/tilt-up position. When the sunroof switch is moved to the close position, ground is applied to the sunroof relay #1 coil through position switches #2 and #4. Sunroof relay #1 energizes and applies voltage to the sunroof motor through its contacts. The sunroof motor runs since it is grounded through the sunroof relay #2 switch contacts. The sunroof motor operates until position switches #2 and #4 reach the close/tilt-down position to interrupt the sunroof relay #1 ground path.

3. Tilt-up

When the sunroof switch is moved to the up position with the sunroof closed, sunroof relay #1 is grounded through position switches #2 and #4 and the sunroof switch. Sunroof relay #1 energizes and applies voltage to the sunroof motor through its contacts. The sunroof motor runs since it is grounded through the sunroof relay #2 contacts. The sunroof motor stops when position switches #2 and #4 reach the open/tilt-up position. When this occurs, sunroof relay #1 de-energizes, cutting power to the sunroof motor.

4. Tilt-down

When the sunroof switch is moved to the down position with the sunroof tilted-up, sunroof relay #2 is grounded through position switches #1 and #3 and the sunroof switch. Sunroof relay #2 energizes and applies voltage to the sunroof motor through its contacts. The sunroof motor runs since it is grounded through the sunroof relay #1 contacts. The motor stops when position switches #1 and #3 reach the close/tilt-down position. When this occurs, sunroof relay #2 de-energizes, cutting power to the sunroof motor.

M-1 626 ■ SLIDING SUNROOF

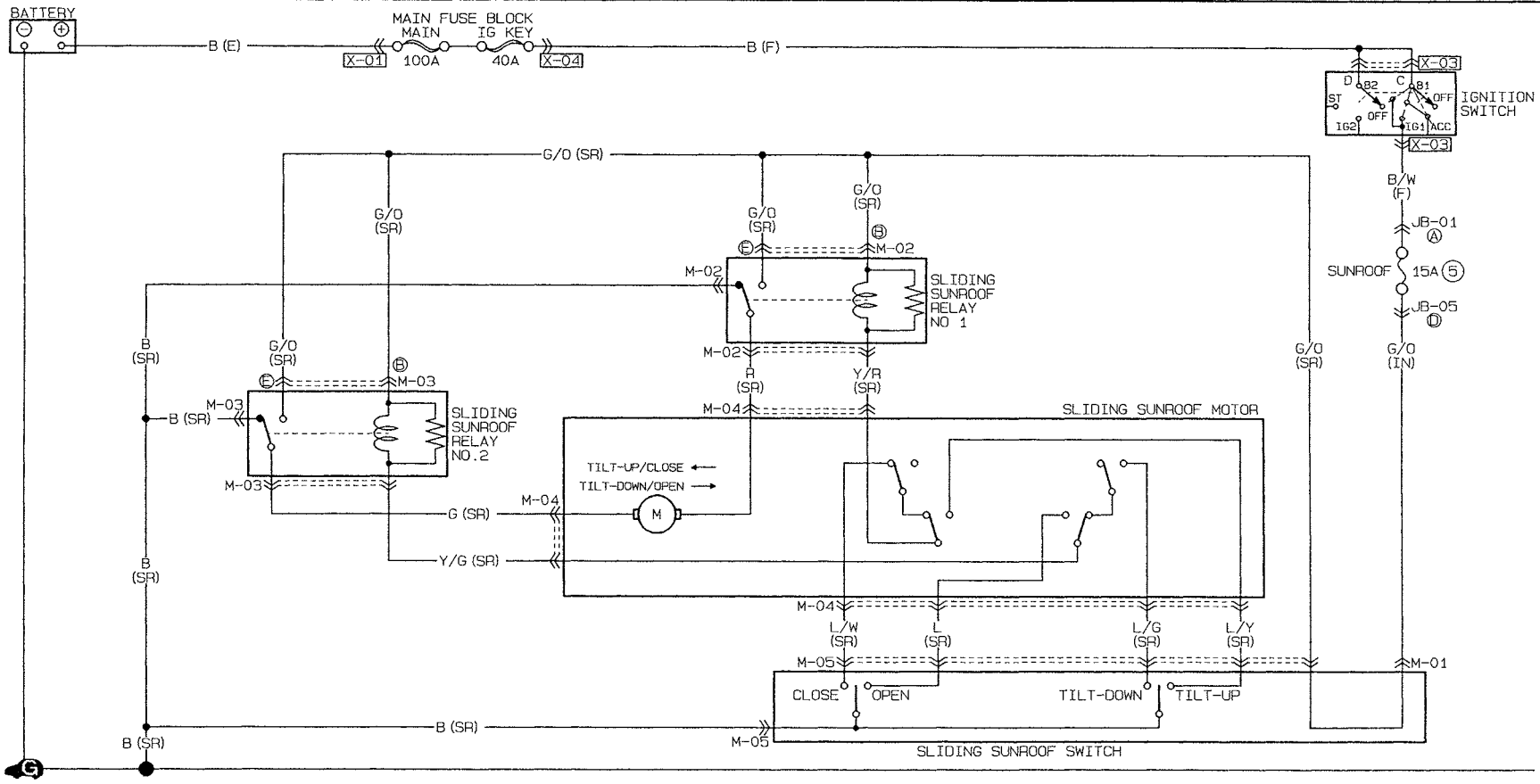

M-01 SLIDING SUNROOF SWITCH (IN)	M-02 SLIDING SUNROOF RELAY NO 1 (SR)	M-03 SLIDING SUNROOF RELAY NO 2 (SR)	M-04 SLIDING SUNROOF MOTOR (SR)	M-05 SLIDING SUNROOF SWITCH (SR)		
L/R G/O	Ⓔ G/O R Y/R B * G/O Ⓑ	Ⓔ G/O G Y/G B * G/O Ⓑ	G Y/G L/Y L/G R Y/R L/W L	G/O L/W L/G L/Y L B		

M-1

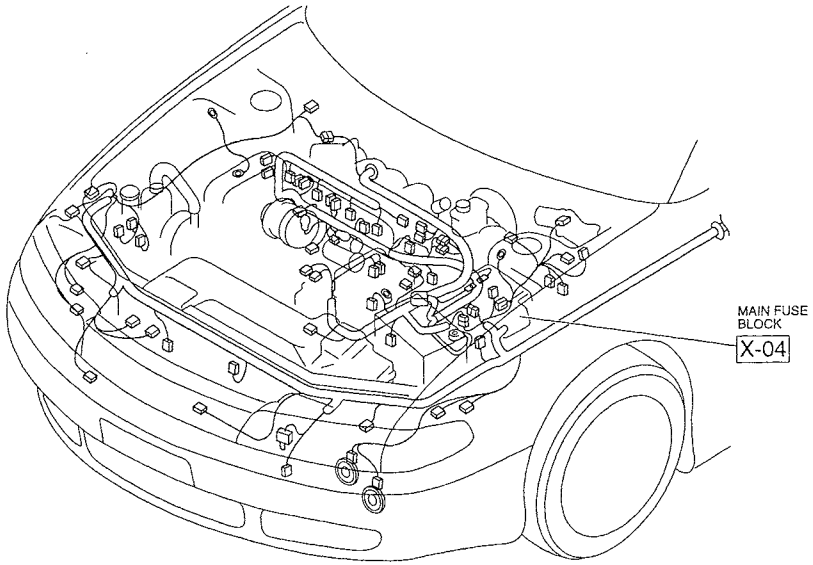
MAIN FUSE BLOCK
X-04

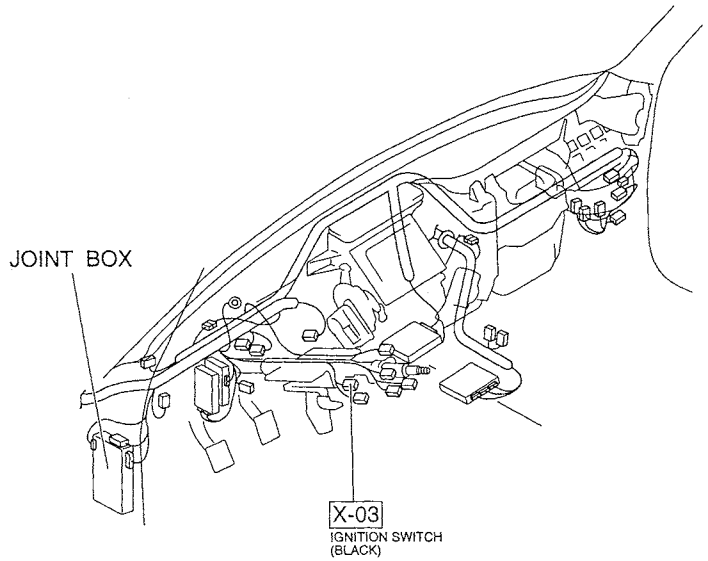
JOINT BOX
X-03
IGNITION SWITCH (BLACK)

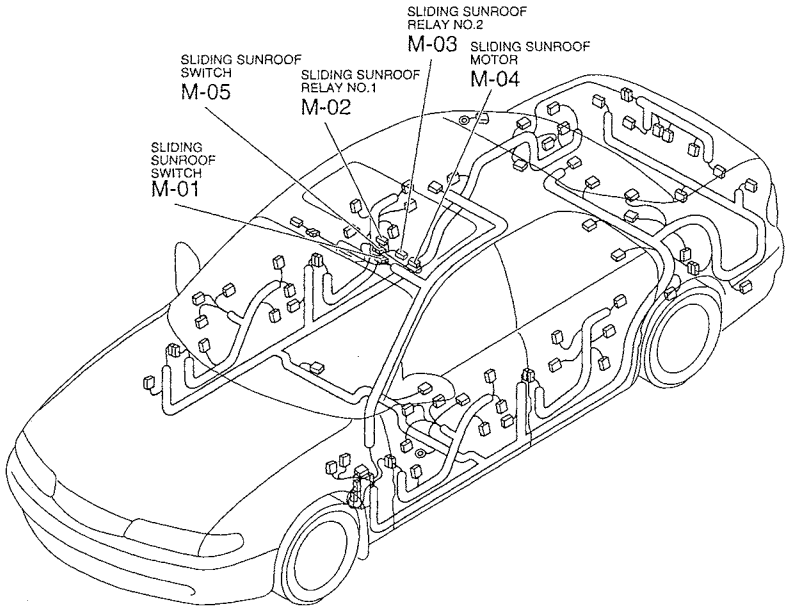
SLIDING SUNROOF RELAY NO.2
M-03
SLIDING SUNROOF MOTOR
M-04
SLIDING SUNROOF SWITCH
M-05
SLIDING SUNROOF RELAY NO.1
M-02
SLIDING SUNROOF SWITCH
M-01

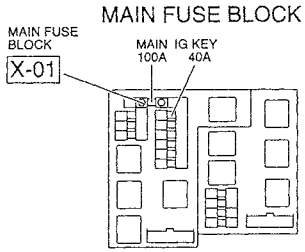
MAIN FUSE BLOCK
MAIN FUSE BLOCK
X-01
MAIN 100A
IG KEY 40A

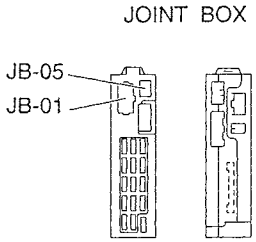
JOINT BOX
JB-05
JB-01

Checklist

	Procedure / Proper operation	Symptom	Flowchart No.
	Operate sunroof switch and verify that sunroof completes tilt and slide movement.	Sliding sunroof does not move	1

Flowchart No. 1	Symptom	Sliding sunroof does not move

Possible cause

- Burnt SUNROOF 15A fuse
- Damaged sunroof switch
- Damaged sunroof relay No.1
- Damaged sunroof relay No.2
- Damaged sunroof motor assembly
- Open or short circuit in wiring harness
- Poor connection of connector

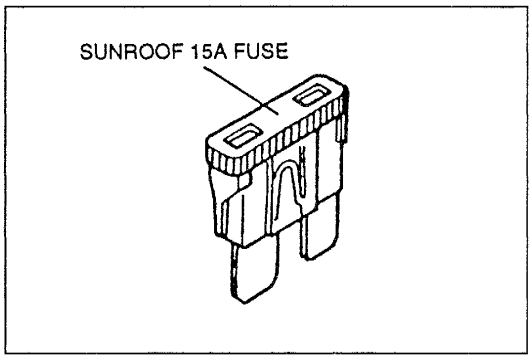

Step 1

Check the SUNROOF 15A fuse in the fuse block.

Fuse	Action
OK	Go to Step 2
Burnt	Replace fuse after checking and repairing wiring harness

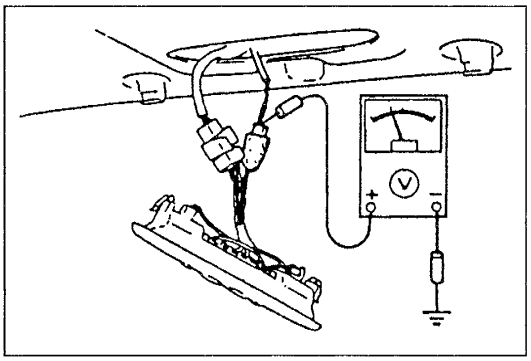

Step 2

1. Remove the overhead console. (Refer to page M1–11.)
2. Turn the ignition switch to ON.
3. Measure the voltage at the (G/O) terminal wire of the sliding sunroof connector.

B+: Battery positive voltage

Voltage	Action
B+	Go to Step 3
Other	Repair wiring harness (Fuse block—Sliding sunroof)

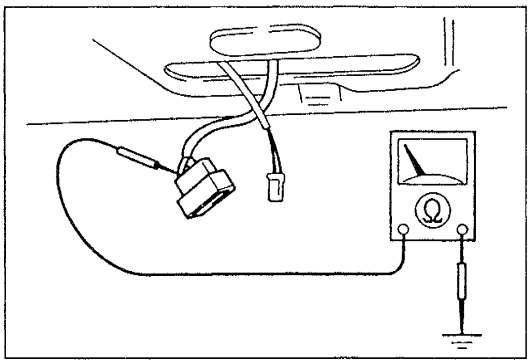

Step 3

1. Turn the ignition switch to OFF.
2. Disconnect the sunroof switch connector and check for continuity between the (B) terminal wire of the connector and ground.

Continuity	Action
Yes	Reconnect connector and go to Step 4
No	Repair wiring harness (Sunroof switch—GND)

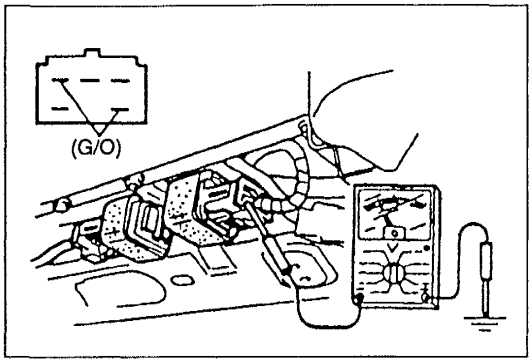

Step 4

1. Turn the ignition switch to ON.
2. Measure the voltage at the (G/O) terminal wires of the sunroof relay No.1 and No.2 connectors.

B+: Battery positive voltage

Voltage	Action
B+	Go to Step 5
Other	Repair wiring harness (Sunroof connector—Sunroof relay)

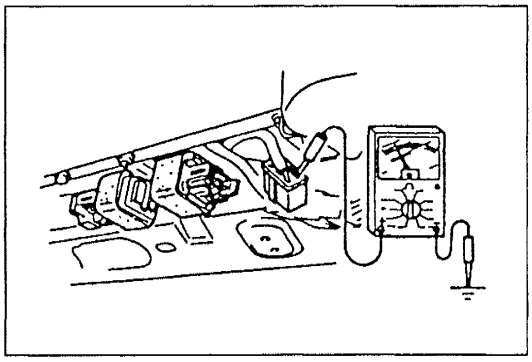

Step 5

1. Turn the ignition switch to OFF.
2. Disconnect the sunroof relay No.1 and No.2 connectors and check for continuity between the (B) terminal wire of the connectors and ground.

Continuity	Action
Yes	Reconnect connectors and go to Step 6
No	Repair wiring harness (Sunroof relay—GND)

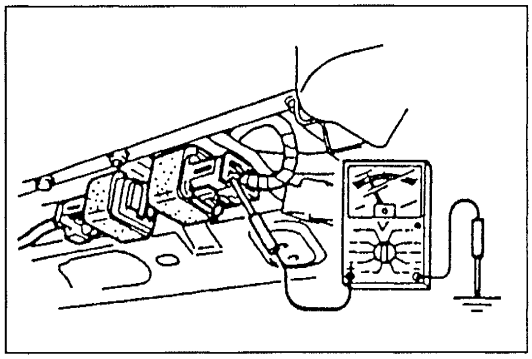

Step 6

1. Turn the ignition switch to ON.
2. Measure the voltage at the (Y/R) and (Y/G) terminal wires of the sunroof relay No.1 and No.2 connectors.

B+: Battery positive voltage

Voltage	Action
B+	Go to Step 7
Other	Check sunroof relay (Refer to page M1–10)

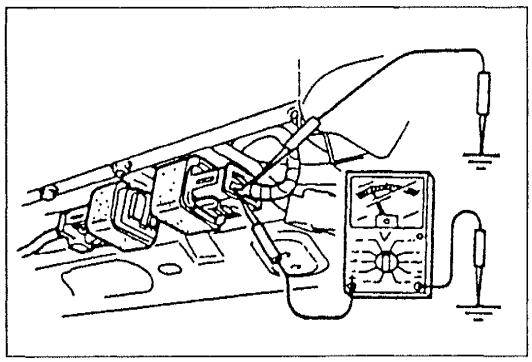

Step 7

1. Measure the voltage at the terminal wires of the sunroof relay No.1 and No.2 connectors with the following terminal wires grounded.

B+: Battery positive voltage

Connect to ground	Terminal	Voltage
(Y/R) wire	(R) wire	B+
(Y/G) wire	(G) wire	B+

2. If correct, go to Step 8.
3. If not as specified, check sunroof relays No.1 and No.2. (Refer to page M1–10.)

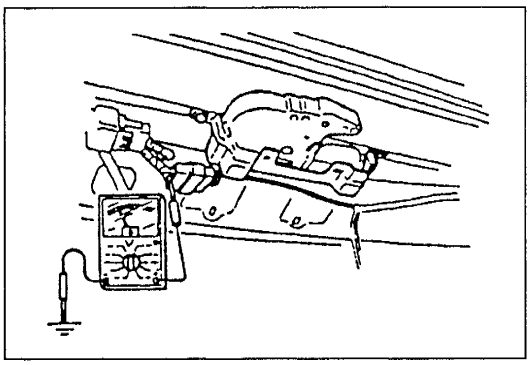

Step 8

Measure the voltage at the (Y/R) and (Y/G) terminal wires of the sunroof motor assembly connector.

B+: Battery positive voltage

Voltage	Action
B+	Go to Step 9
Other	Repair wiring harness (Sunroof relay—Sunroof motor assembly)

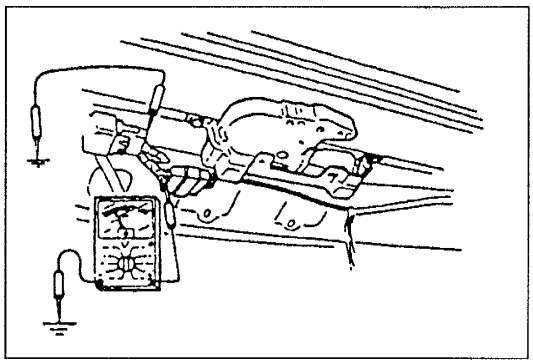

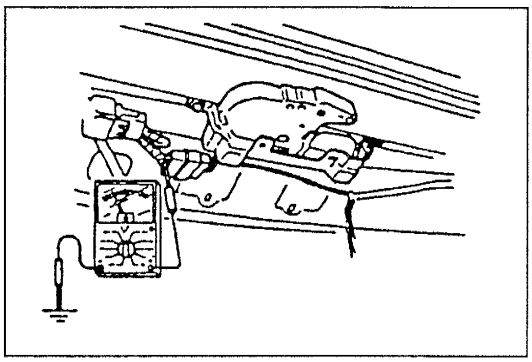

Step 9

1. Measure the voltage at the terminal wires of the sunroof motor assembly connector with the following terminal wires grounded.

B+: Battery positive voltage

Connect to ground	Terminal	Voltage
(Y/R) wire	(R) wire	B+
(Y/G) wire	(G) wire	B+

2. If correct, go to Step 10.
3. If not as specified, repair the wiring harness (sunroof relay No.1 and No.2—sunroof motor assembly).

Step 10

1. Move the slide panel to the following positions by using a screwdriver and measure the voltage at the terminal wires of the sunroof motor assembly connector.

B+: Battery positive voltage

Panel position	Terminal	Voltage
Tilt-down	(L/G) wire	B+
Tilt-up	(L/Y) wire	B+
Fully open	(L) wire	B+
Fully closed	(L/W) wire	B+

2. If correct, go to Step 11.
3. If not as specified, check the sunroof motor assembly. (Refer to page M1–10.)

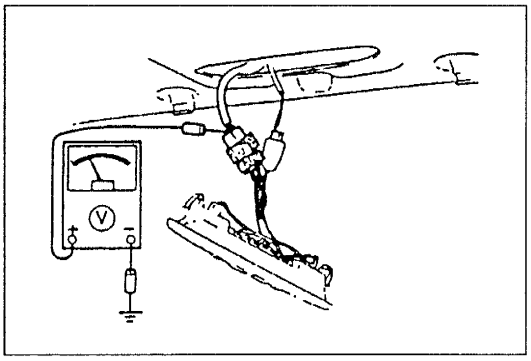

Step 11

1. Move the slide panel to the following positions by using a screwdriver and measure the voltage at the terminal wires of the sunroof switch connector.

B+: Battery positive voltage

Panel position	Terminal	Voltage
Tilt-down	(L/G) wire	B+
Tilt-up	(L/Y) wire	B+
Fully open	(L) wire	B+
Fully closed	(L/W) wire	B+

2. If correct, check the sunroof switch. (Refer to page M1–10.)
3. If not as specified, repair the wiring harness (sunroof motor assembly—sunroof switch).

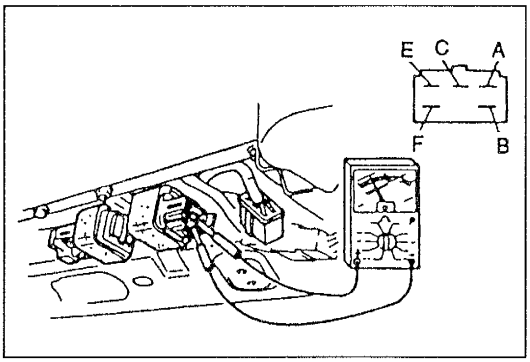

SUNROOF RELAY

Inspection

1. Disconnect the sunroof relay connector.
2. Apply battery positive voltage and check for continuity between the relay terminals.

O–O : Continuity B+: Battery positive voltage

Connection		A	B	C	E	F
B+	GND					
—	—	O	O	O		O
B	A			O	O	

3. If not as specified, replace the sunroof relay.

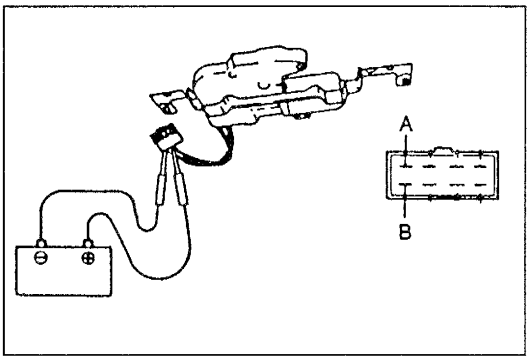

SUNROOF MOTOR ASSEMBLY

Inspection

Motor

1. Disconnect the sunroof motor assembly connector.
2. Connect battery positive voltage to terminal A and ground to terminal B. Verify that the motor operates.
3. Reverse the above connections and verify that the motor rotates in the opposite direction.
4. If not as specified, replace the sunroof motor assembly.

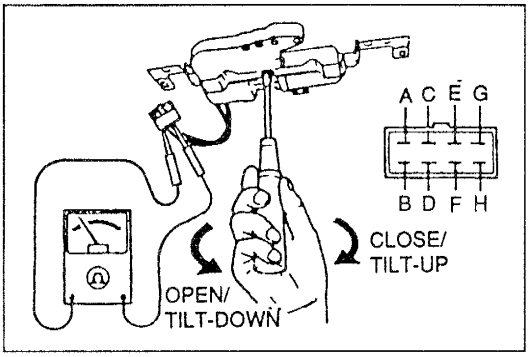

Limit switch

1. Disconnect the sunroof motor assembly connector.
2. Move the slide panel to the following positions by using a screwdriver and check for continuity between the motor terminals.

O–O : Continuity

Panel position \ Terminal	G	H	E	F	C	D	A	B
Fully open				O		O		
Fully closed		O			O			
			O			O		
Tilt-up	O				O			

3. If not as specified, replace the sliding sunroof motor assembly.

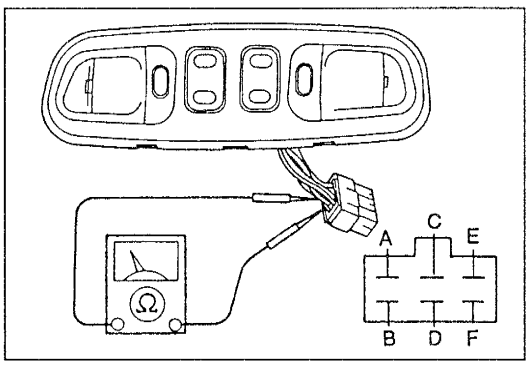

SUNROOF SWITCH (WITHIN OVERHEAD CONSOLE)

Inspection

1. Remove the overhead console.
   (Refer to page M1–11.)
2. Check for continuity between the switch terminals.

O–O : Continuity

Switch	Function \ Terminal	E	F	C	D	A	B
Slide	OPEN		O		O		
	CLOSE		O	O			
Tilt	UP		O				O
	DOWN	O	O				

3. If not as specified, replace the overhead console.

COMPONENTS

Removal / Installation

1. Disconnect the negative battery cable.
2. Remove in the order shown in the figure. To remove the headliner, remove the A-pillar trim, B-pillar upper trim, and C-pillar trim. (Refer to the 1996 626/MX-6 Workshop Manual, section S.)
3. Install in the reverse order of removal. (Refer to the 1996 626/MX-6 Workshop Manual, section S, when installing the sunroof motor assembly.)

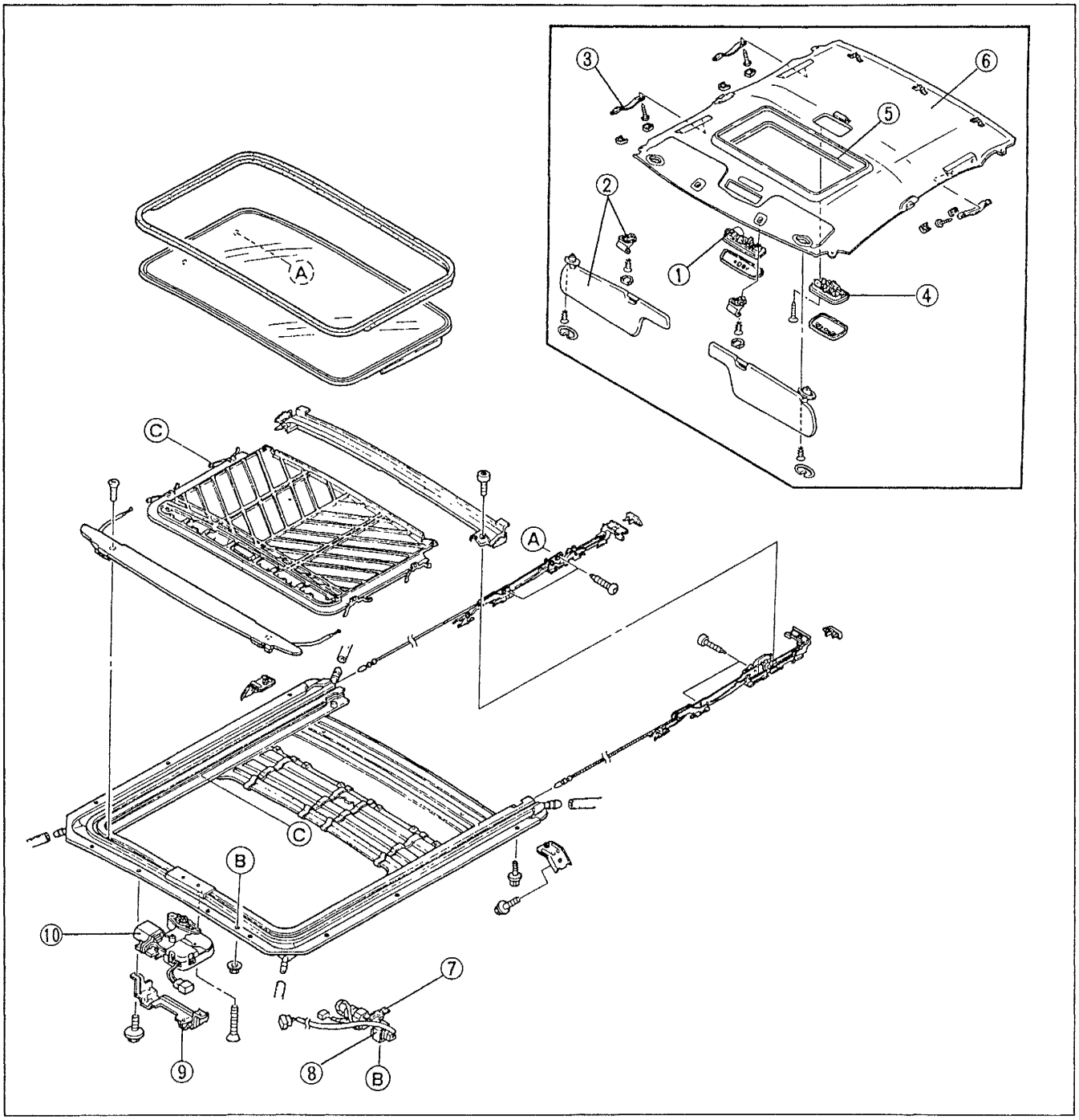

1. Sunroof switch (within overhead console)
   Inspection..... page M1–10
2. Sunvisor and adapter
3. Assist handle
4. Interior light
5. Seaming welt
6. Headliner
7. Relay bracket
8. Sunroof relay
   Inspection..... page M1–10
9. Motor bracket
10. Sunroof motor assembly
    Inspection..... page M1–10

Before beginning any service procedure, refer to section S of this manual for air bag system service warnings.

OUTER SLIDING SUNROOF

OUTER SLIDING SUNROOF

STRUCTURAL VIEW

MX-6

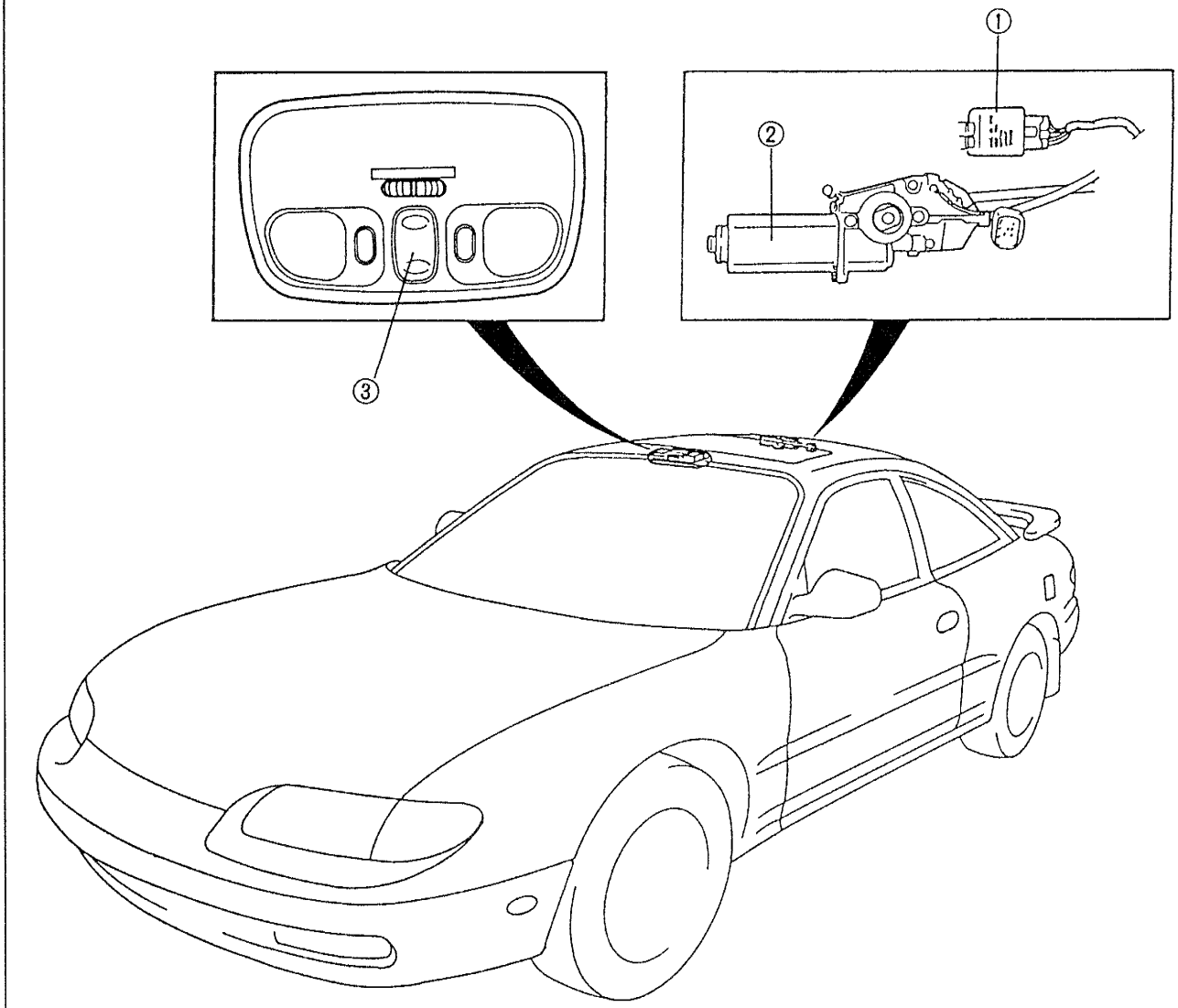

1. Sunroof relay
   Inspection.....page M2– 9
   Removal / Installation.....page M2–11
2. Sunroof motor assembly
   Inspection.....page M2–10
   Removal / Installation.....page M2–11
3. Sunroof switch (within overhead console)
   Inspection.....page M2– 9
   Removal / Installation.....page M2–11

SYSTEM DIAGRAM

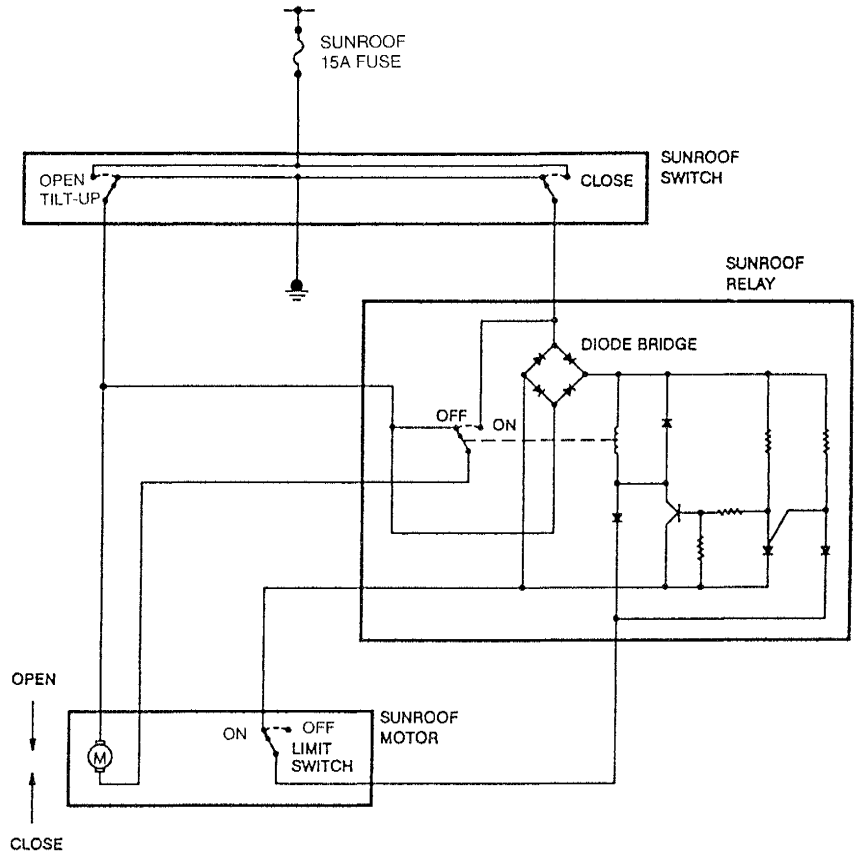

LIMIT SWITCH OPERATION

PANEL POSITION	LIMIT SWITCH
CLOSED	ON
TILTED-UP	OFF
OPEN	OFF
TILTING UP	ON
TILTING DOWN	ON
OPENING	OFF
CLOSING	OFF

System Description

The outer sliding sunroof system consists of the sunroof switch, the sunroof relay, and the sunroof motor.

System Operation

1. Tilt-up

When the sunroof is closed, the sunroof motor limit switch is in the close position. When the sunroof switch is moved to the open/tilt-up position, voltage is applied to the sunroof motor and to the sunroof relay coil through the diode bridge. The relay coil is grounded through the limit switch, the diode bridge, and the close switch contact in the sunroof switch. The sunroof motor operates because it is grounded through the sunroof relay contact and the close switch contact in the sunroof switch. When the limit switch reaches the open position, the sunroof relay ground path is interrupted, de-energizing the relay and momentarily stopping the motor.

2. Slide open

With the sunroof switch in the open position, voltage is applied to the sunroof motor and the sunroof relay coil through the diode bridge. The relay energizes since its coil is grounded through the transistor, the diode bridge, and the close switch contact in the sunroof switch. The sunroof motor runs since it is grounded through the relay contact and the close switch contact.

3. Slide close

With the sunroof open, the sunroof motor limit switch is in the open position. When the sunroof switch is moved to the close position, voltage is applied to the sunroof relay coil through the diode bridge. The sunroof relay coil is grounded through the transistor, the diode bridge, and the open/tilt switch contact in the sunroof switch. The sunroof relay energizes and the relay contact closes to allow voltage to be applied to the sunroof motor. The motor runs since it is grounded through the open/tilt switch contact in the sunroof switch.

M-2 MX-6 ■ SLIDING SUNROOF

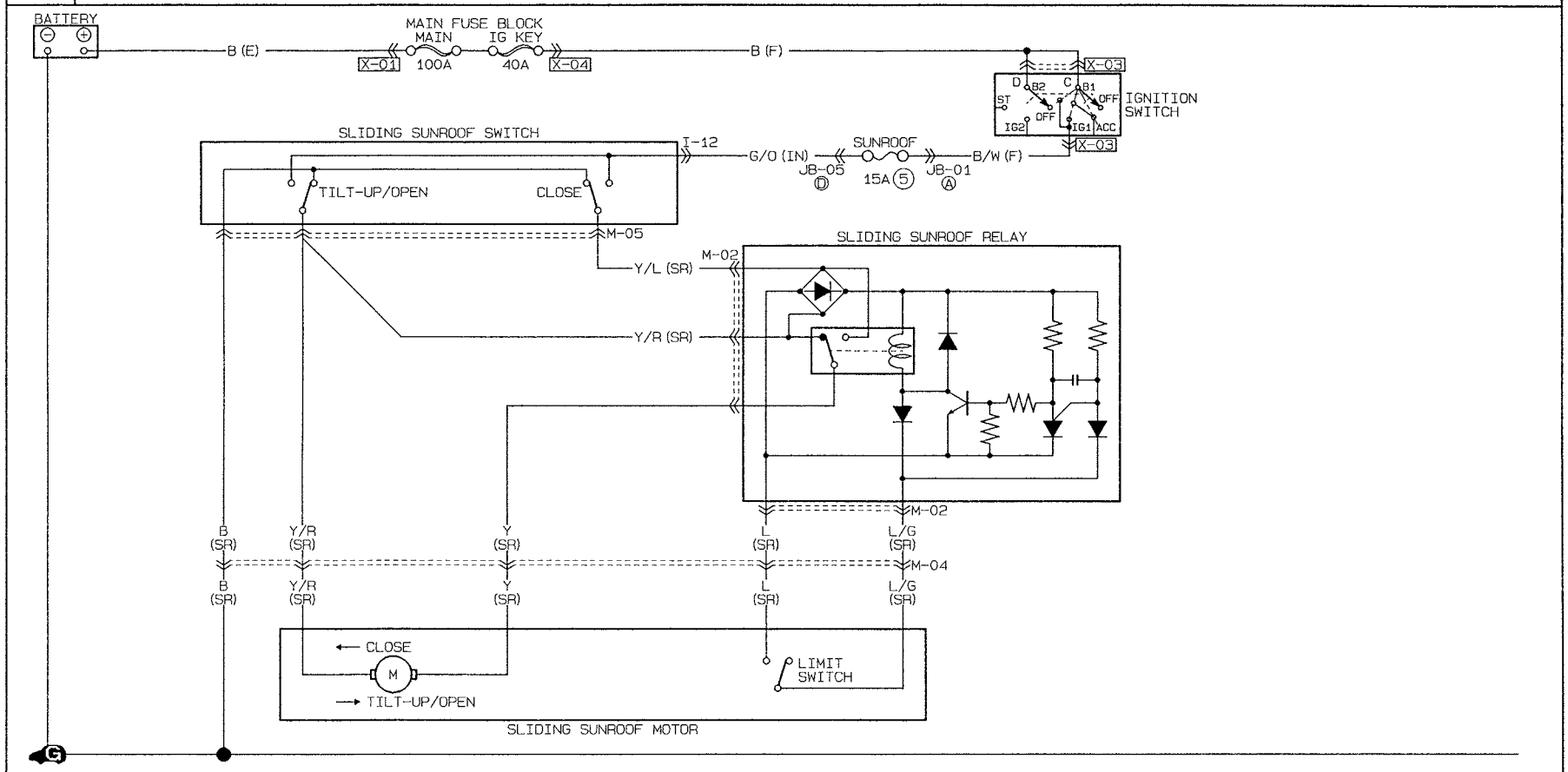

M-02 SLIDING SUNROOF RELAY (SR)	M-04 SLIDING SUNROOF MOTOR (SR)		M-05 SLIDING SUNROOF SWITCH (SR)	I-12 SLIDING SUNROOF SWITCH (SR)
	SLIDING SUNROOF SWITCH SIDE	SLIDING SUNROOF MOTOR SIDE		
Y, *, * L/G, *, Y/R, L, Y/L	L/G, L Y, *, B, Y/R	L, L/G Y/R, B, *, Y	B Y/R, Y/R, Y/L	G/O, L/R B, G

Connector Locations

M-2

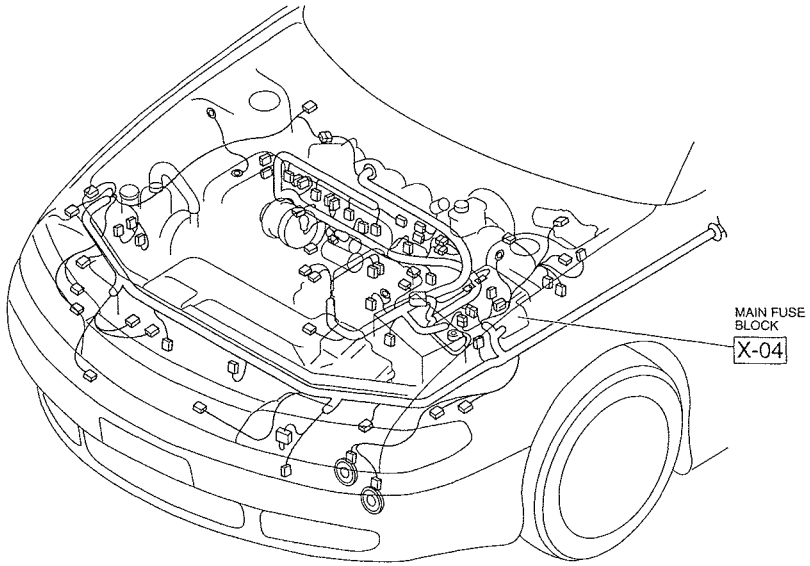

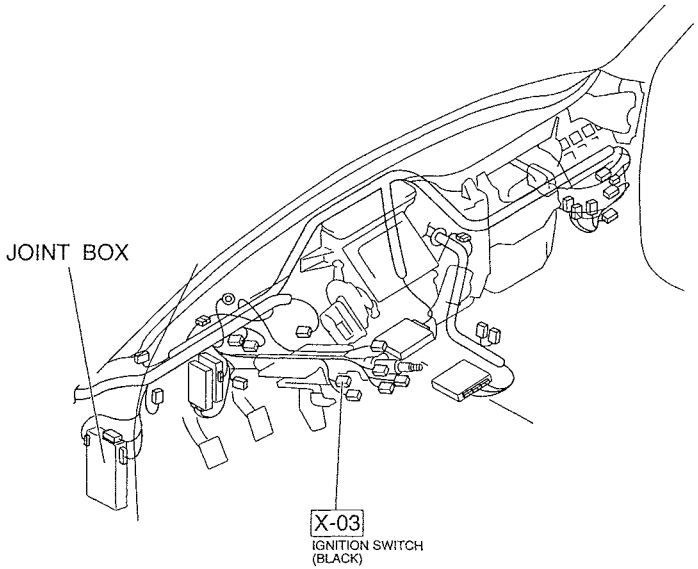

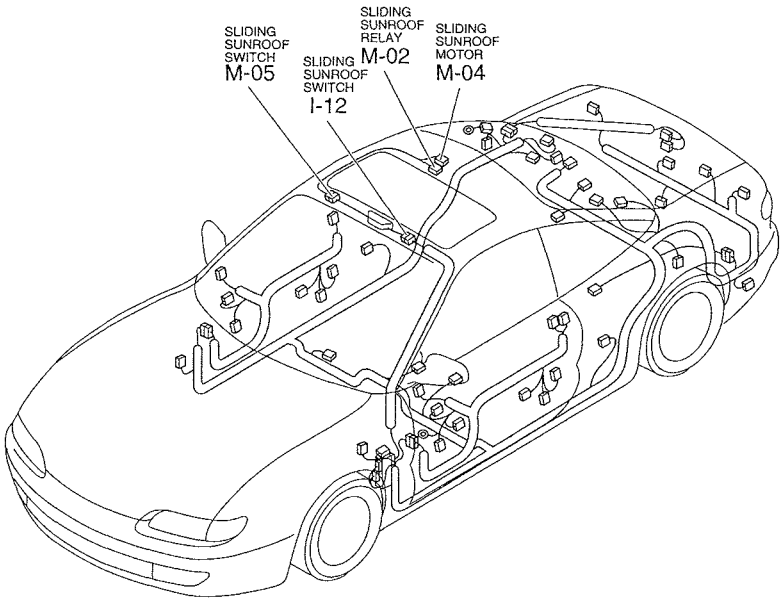

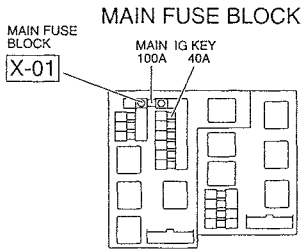

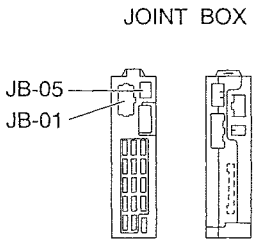

Checklist

	Procedure/Proper operation	Symptom	Flowchart No.
	Operate sunroof switch and verify that sunroof completes tilt and slide movement.	Sliding sunroof does not move	1

Flowchart No.1	Symptom	Sliding sunroof does not move

Possible cause

- Burnt SUNROOF 15A fuse
- Damaged sunroof switch
- Damaged sunroof relay
- Damaged sunroof motor
- Open or short circuit in wiring harness
- Poor connection of connector

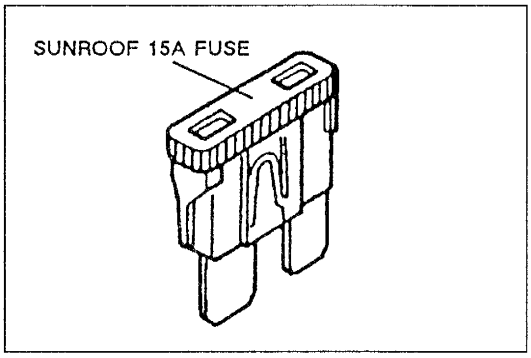

Step 1

Check the SUNROOF 15A fuse in the fuse block.

Fuse	Action
OK	Go to Step 2
Burnt	Replace fuse after checking and repairing wiring harness

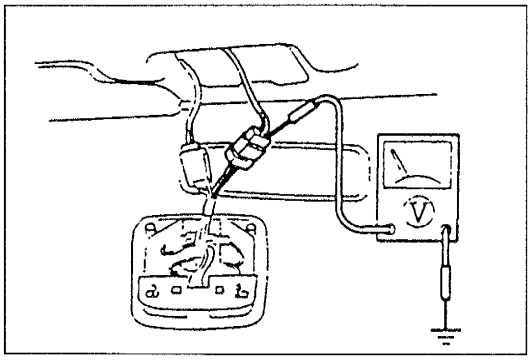

Step 2

1. Remove the overhead console. (Refer to page M2–11.)
2. Turn the ignition switch to ON.
3. Measure the voltage at the (G/O) terminal wire of the sunroof switch connector.

B+: Battery positive voltage

Voltage	Action
B+	Go to Step 3
Other	Repair wiring harness (Fuse block—Sunroof switch)

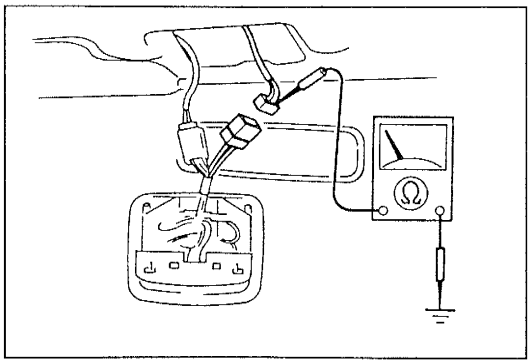

Step 3

1. Disconnect the sunroof switch connector.
2. Check for continuity between the (B) terminal wire of the sunroof switch and ground.

Continuity	Action
Yes	Reconnect connector go to Step 4
No	Repair wiring harness (Sunroof switch—GND)

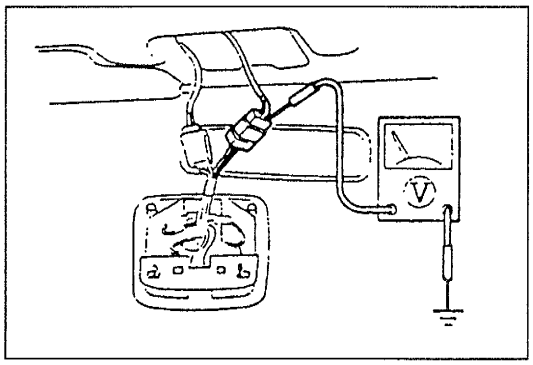

Step 4

1. Measure the voltage at the terminal wires of the sunroof switch connector with the sunroof switch in the following positions.

B+: Battery positive voltage

Switch position	Terminal	Voltage
Open/tilt-up	(Y/R) wire	B+
Close	(Y/L) wire	B+

2. If correct, go to Step 5.
3. If not as specified, check the sunroof switch. (Refer to page M2–9.)

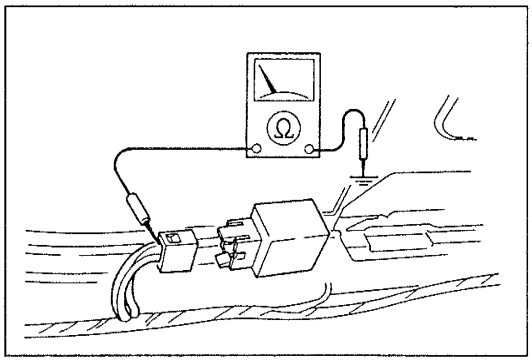

Step 5

1. Turn the ignition switch to LOCK.
2. Disconnect the sunroof relay connector.
3. Check for continuity between ground and the sunroof relay terminals indicated below.

Terminal	Continuity
(Y/R) wire	Yes
(Y/L) wire	Yes

4. If correct, go to Step 6.
5. If not as specified, repair the wiring harness (sunroof relay—sunroof switch).

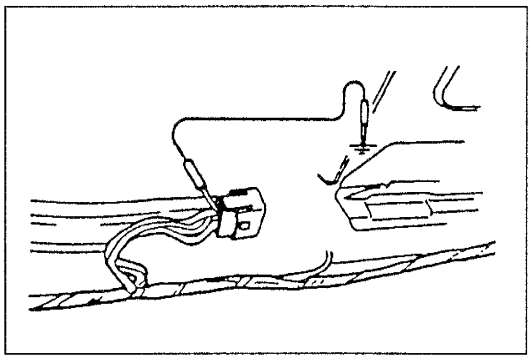

Step 6

1. Turn the ignition switch to ON.
2. Connect a jumper wire between the (Y) terminal wire of the sunroof relay connector and ground. Operate the sunroof switch and verify that the sunroof motor operates in the opening direction.
3. If correct, go to Step 7.
4. If not as specified, reconnect the connector and go to Step 9.

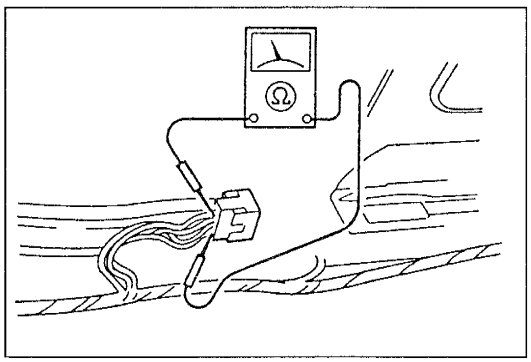

Step 7

1. Check for continuity between the (L) and (L/G) terminals wires of the sunroof relay connector. Use an allen wrench to open and close the sunroof.

Sunroof	Continuity
Open	No
Closed	Yes

2. If correct, replace the sunroof relay.
3. If not as specified, go to Step 8.

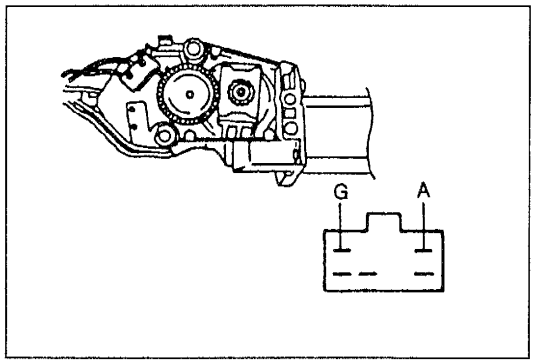

Step 8

1. Turn the ignition switch to LOCK.
2. Disconnect the sunroof motor assembly connector.
3. Check for continuity between sunroof motor assembly connector terminals A and G. Use an allen wrench to open and close the sunroof.

Sunroof	Continuity
Open	No
Closed	Yes

4. If correct, repair the wiring harness (sunroof relay—sunroof motor assembly).
5. If not as specified, replace the sunroof motor assembly.

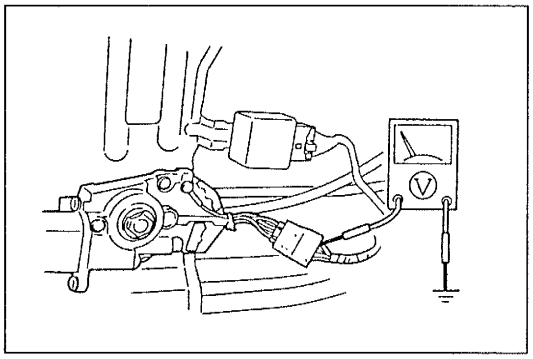

Step 9

1. Measure the voltage at the terminal wires of the sunroof motor assembly connector with the sunroof switch in the following positions.

B+: Battery positive voltage

Switch position	Terminal	Voltage
Open/tilt-up	(Y/R) wire	B+
Close	(Y) wire	B+

2. If correct, replace the sunroof motor assembly.
3. If not as specified, repair the wiring harness (sunroof switch—sunroof motor assembly).

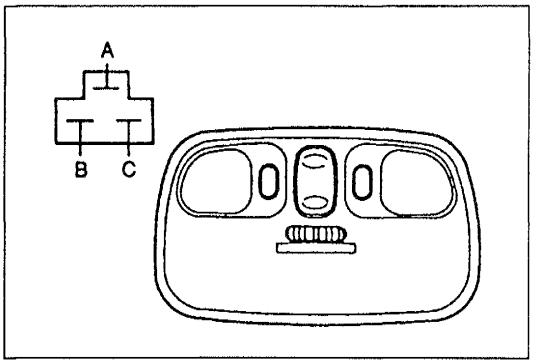

SUNROOF SWITCH (WITHIN OVERHEAD CONSOLE)

Inspection

1. Remove the overhead console. (Refer to page M2–11.)
2. Disconnect the sunroof switch connector.
3. Check for continuity between the switch terminals.

O–O : Continuity

Function \ Terminal		A	B	C
Open	Tilt-up Slide	O——O		
Close		O——O		

4. If not as specified, replace the overhead console.

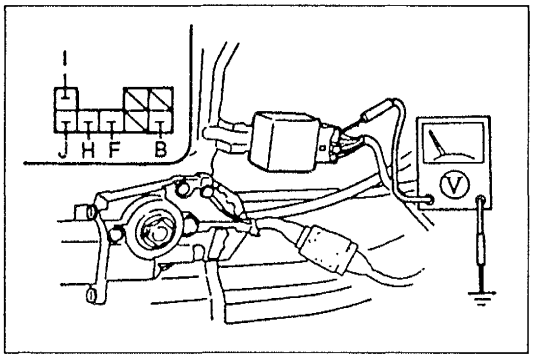

SUNROOF RELAY

Inspection

1. Turn the ignition switch to ON.
2. Measure the voltage at the terminals of the sunroof relay as indicated below.
3. If not as specified, replace the sunroof relay.

B+: Battery positive voltage

Connector	Terminal	Connection	Test condition	Voltage
5-pin	B	Sunroof switch	Sunroof closing	B+
			Other	0V
	F	Sunroof switch	Sunroof tilting up or opening	B+
			Other	0V
	H	Limit switch	Constant	0V
	I	Sunroof motor	Sunroof opening	0V
			Sunroof closing	B+
	J	Limit switch	Sunroof opening or closing	B+
			Other	0V

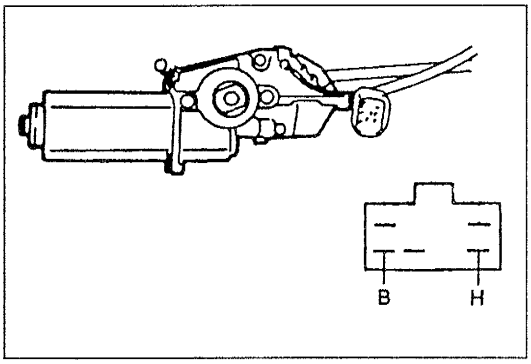

SUNROOF MOTOR ASSEMBLY

Inspection

Motor

1. Disconnect the sunroof motor assembly connector.
2. Connect battery positive voltage to terminal B and ground to terminal H. Verify that the motor rotates in the opening direction.
3. Reverse the above connections and verify that the motor rotates in the closing direction.
4. If not as specified, replace the sunroof motor assembly.

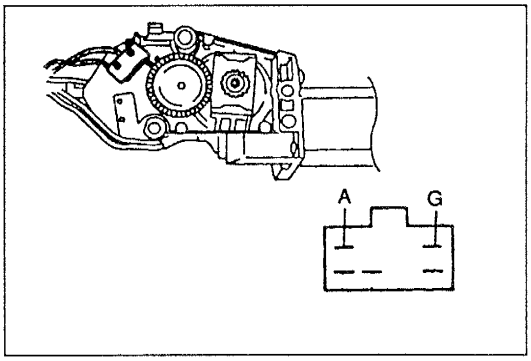

Limit switch

1. Move the slide panel to the following positions by using an allen wrench. Check for continuity between terminals A and G of the sunroof motor assembly.

O–O : Continuity

Panel position \ Terminal	A	G
Tilt-up/fully open		
Fully closed	O————	————O

2. If not as specified, replace the sliding sunroof motor assembly.

COMPONENTS

Removal / Installation

1. Disconnect the negative battery cable.
2. Remove in the order shown in the figure. To remove the headliner, remove the A-pillar trim, C-pillar trim, and quarter trim. (Refer to the 1996 626/MX-6 Workshop Manual, section S.)
3. Install in the reverse order of removal. (Refer to the 1996 626/MX-6 Workshop Manual, section S, when installing the sunroof motor assembly.)

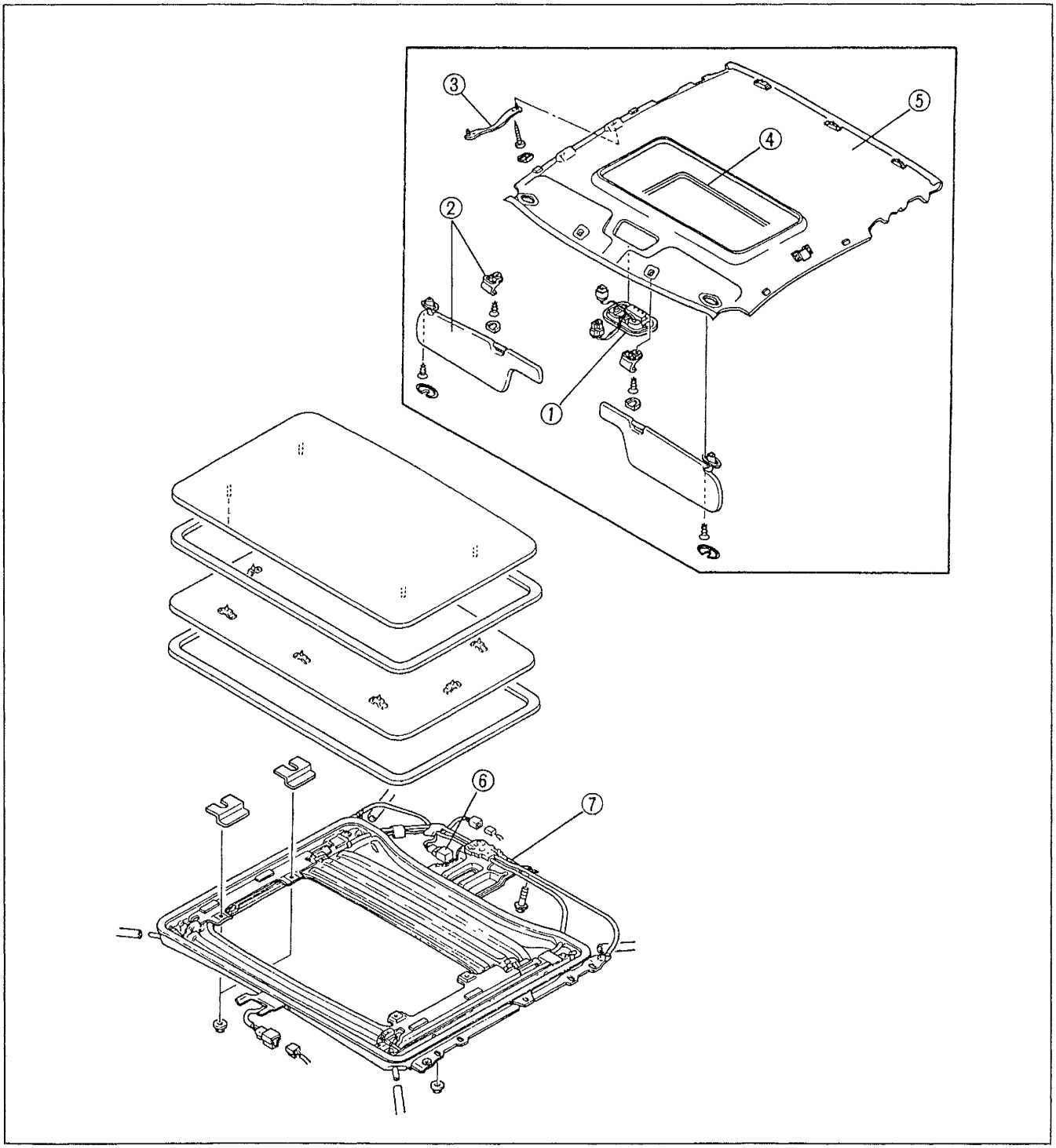

1. Sunroof switch (within overhead console)
   Inspection.....page M2–9
2. Sunvisor and adapter
3. Assist handle
4. Seaming welt
5. Headliner
6. Sunroof relay
   Inspection.....page M2– 9
7. Sunroof motor assembly
   Inspection.....page M2–10

Before beginning any service procedure, refer to section S of this manual for air bag system service warnings.

POWER SEAT

POWER SEAT

STRUCTURAL VIEW

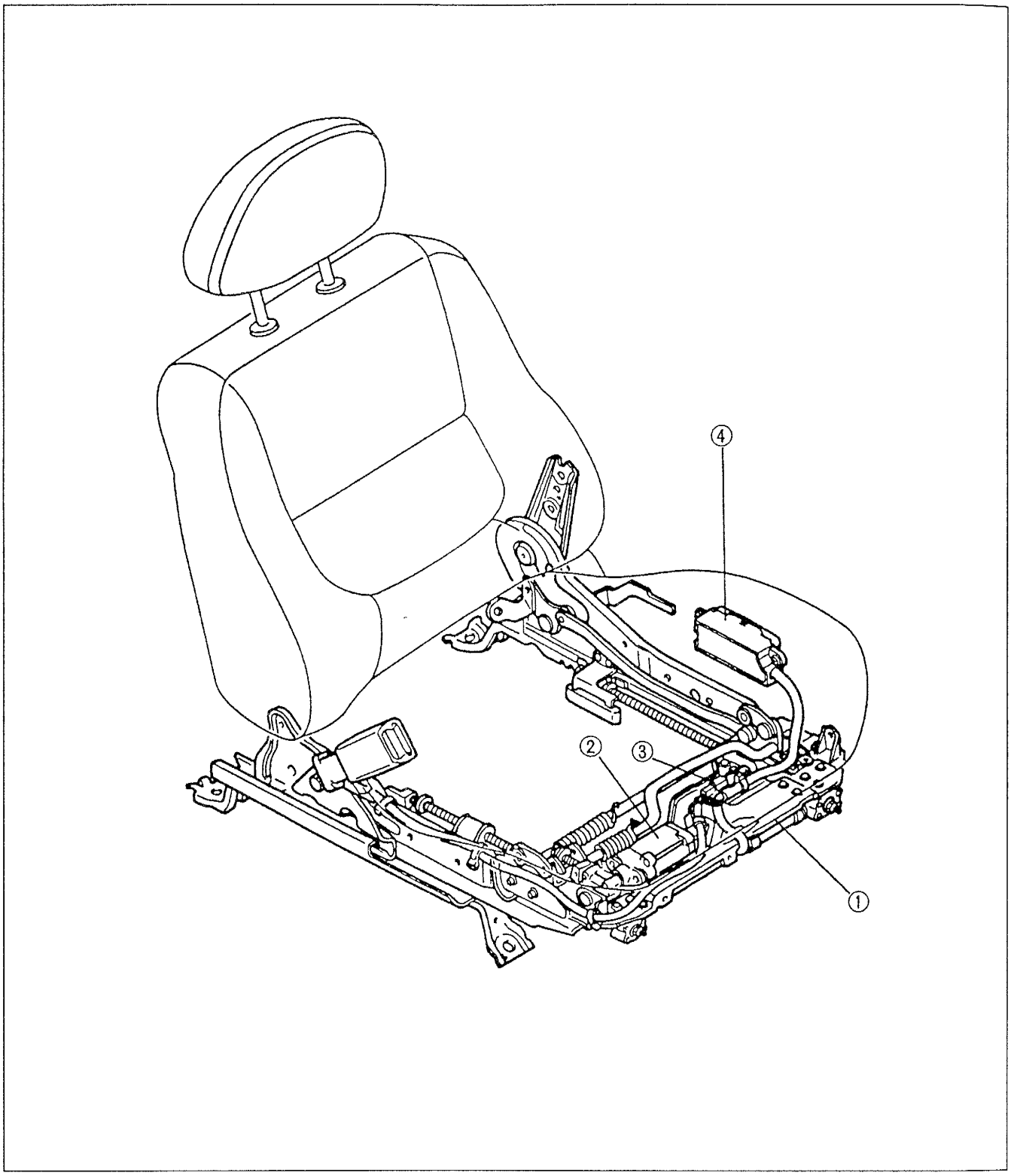

1. Slide motor
   Inspection ..... page P1– 9
   Disassembly / Assembly ..... page P1–11
2. Front-lift motor
   Inspection ..... page P1–10
   Disassembly / Assembly ..... page P1–11
3. Rear-lift motor
   Inspection ..... page P1–10
   Disassembly / Assembly ..... page P1–11
4. Power seat switch
   Inspection ..... page P1– 9
   Disassembly / Assembly ..... page P1–11

SYSTEM DIAGRAM

B+: Battery positive voltage

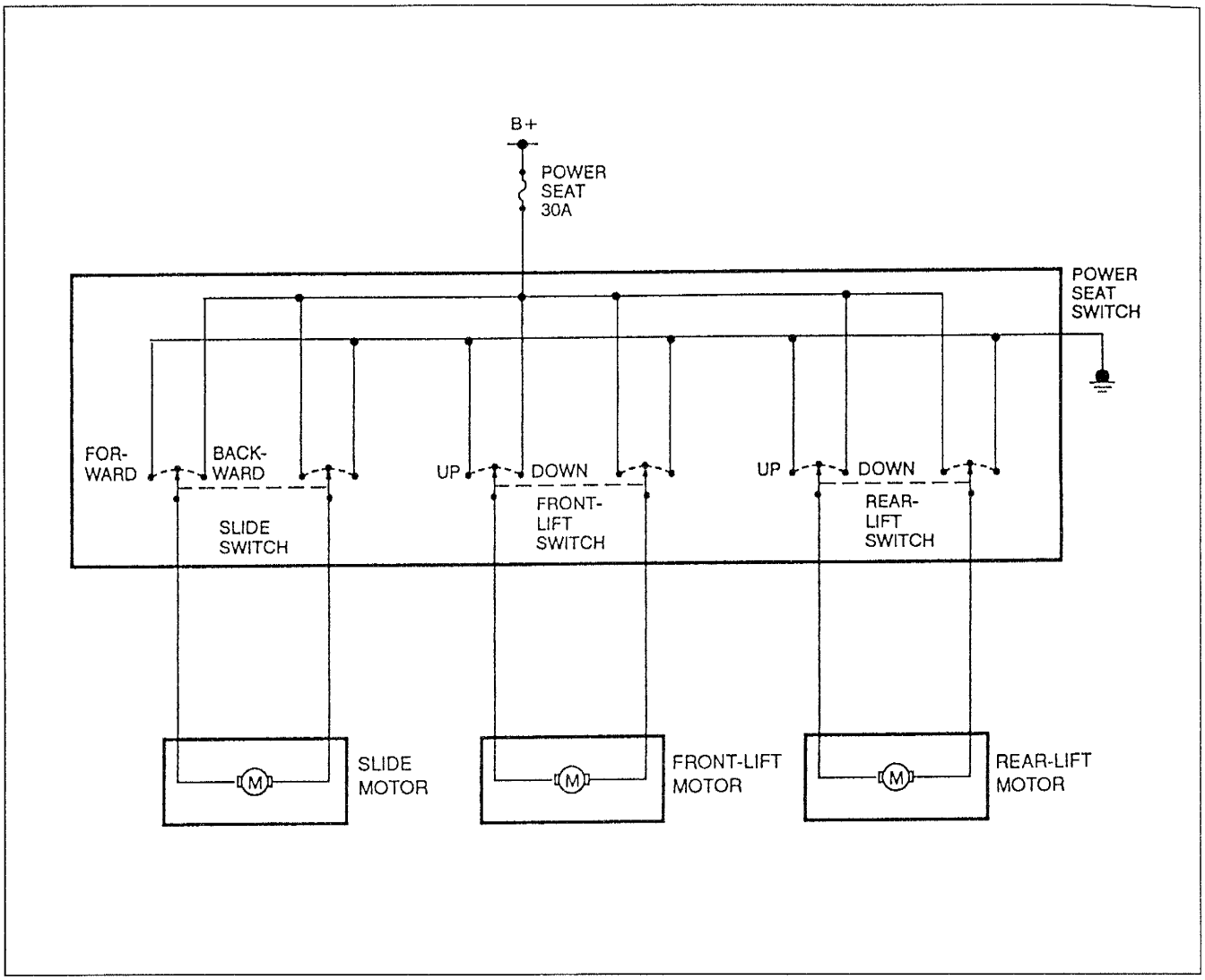

Description

The power seat system consists of the power seat switch, slide motor, front-lift motor, and rear-lift motor.

System Operation

1. Slide

- When the slide switch is pushed forward, current flows through the slide switch and motor. The motor turns in the forward direction.
- When the slide switch is pushed backward, current flows through the slide switch and motor. The motor turns in the backward direction.

2. Front-lift

- When the front-lift switch is pulled up, current flows through the front-lift switch and motor. The motor turns in the up direction.
- When the front-lift switch is pushed down, current flows through the front-lift switch and motor. The motor turns in the reverse direction.

3. Rear-lift

- When the rear-lift switch is pulled up, current flows through the rear-lift switch and motor. The motor turns in the up direction.
- When the rear-lift switch is pushed down, current flows through the rear-lift switch and motor. The motor turns in the reverse direction.

P ■ POWER SEAT

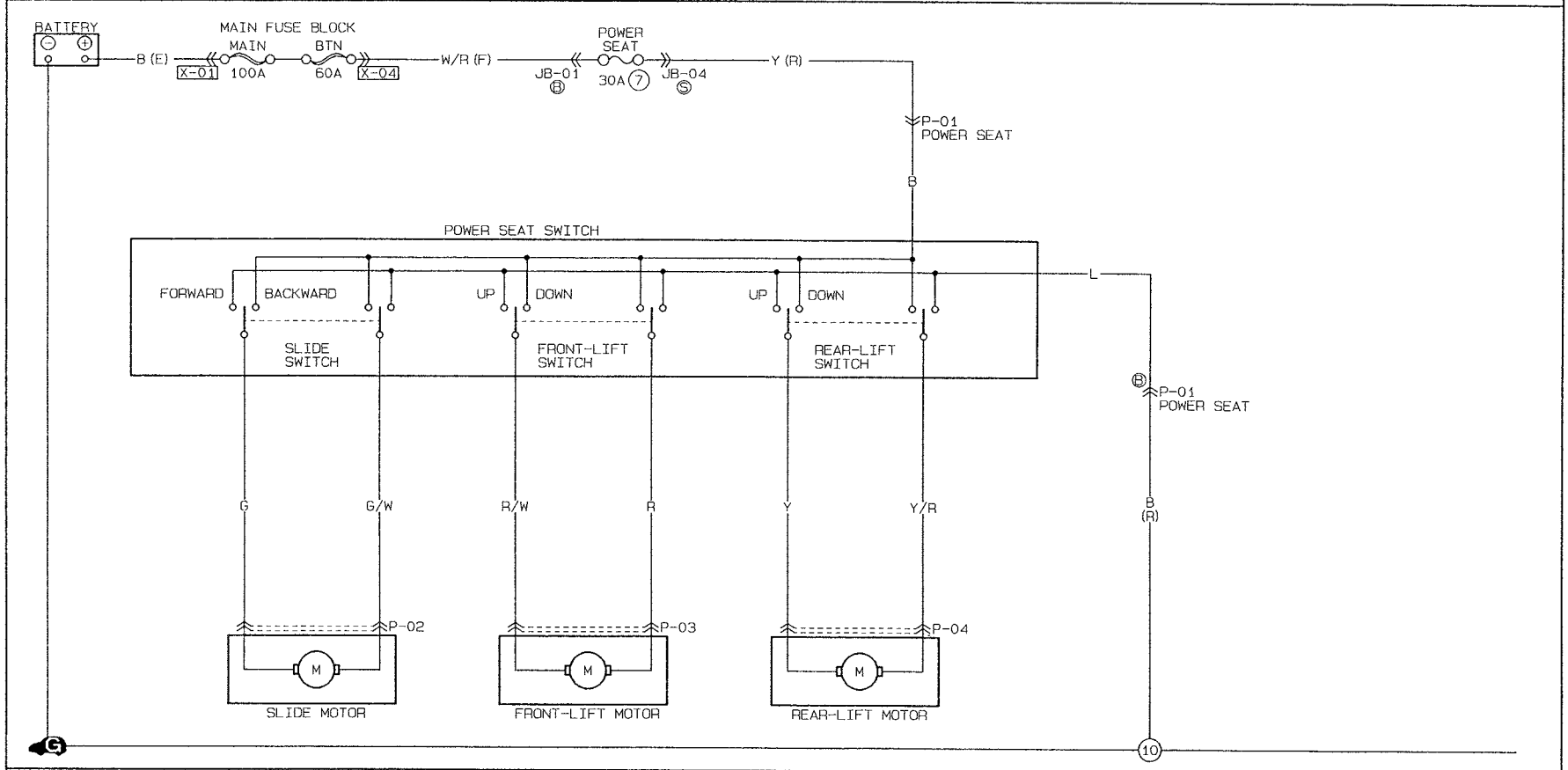

P-01 POWER SEAT (R)	P-02 SLIDE MOTOR	P-03 FRONT-LIFT MOTOR	P-04 REAR-LIFT MOTOR			
Ⓑ Y / BR/W / * / B / * / B Ⓕ	G/W / G	R / R/W	Y/R / Y			

P

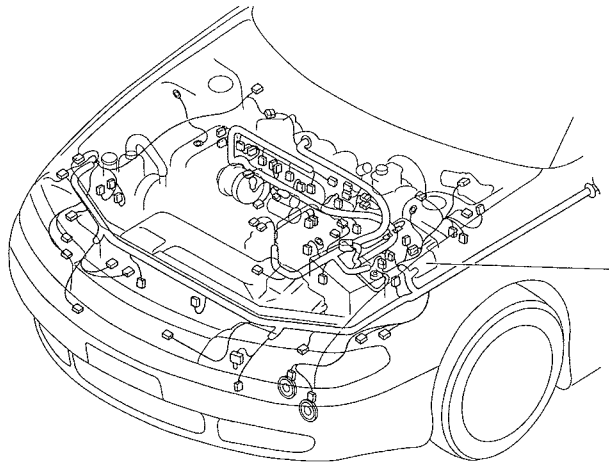
X-04
MAIN FUSE BLOCK

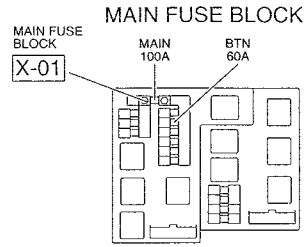
MAIN FUSE BLOCK
MAIN FUSE BLOCK
X-01
MAIN 100A
BTN 60A

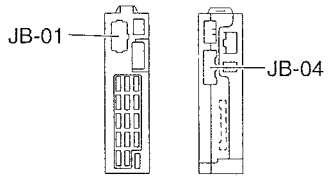
JOINT BOX
JB-01
JB-04

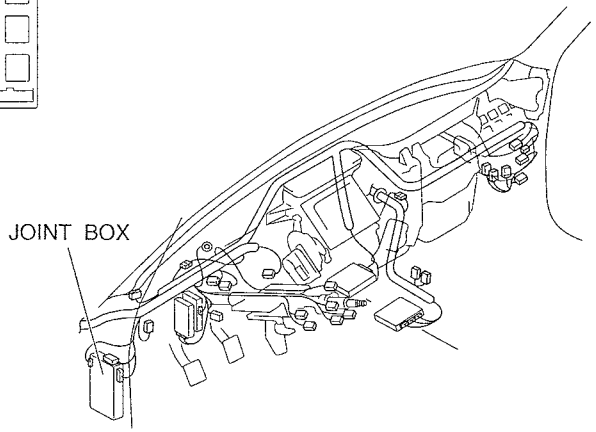
JOINT BOX

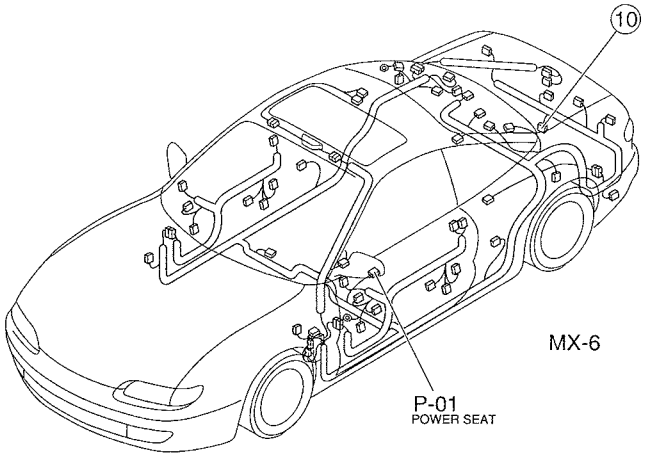
10
MX-6
P-01
POWER SEAT

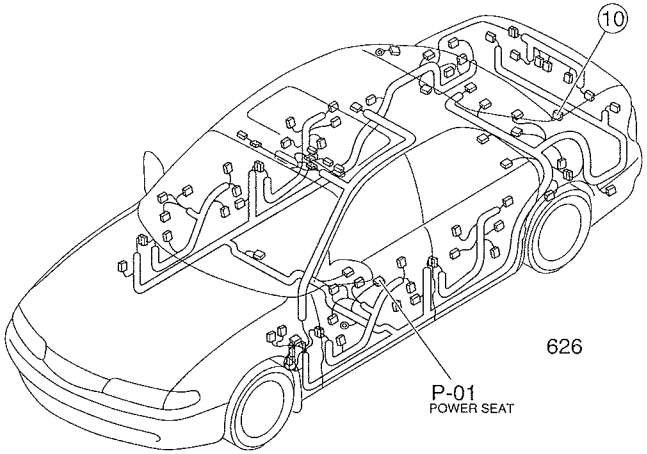
10
626
P-01
POWER SEAT

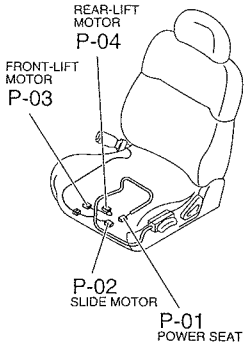
REAR-LIFT MOTOR
P-04
FRONT-LIFT MOTOR
P-03
P-02
SLIDE MOTOR
P-01
POWER SEAT

Checklist

	Procedure / Proper operation	Symptom	Flowchart No.
	Operate power seat switch and verify following operations: • Slide .....Seat moves fore and aft • Front lift .....Front of seat moves up and down • Rear lift .....Rear of seat moves up and down	Power seat functions of driver's seat do not operate	1
		Driver seat does not slide forward or backward	2
		Front of driver's seat does not move up or down	3
		Rear of driver's seat does not move up or down	4

Flowchart No.1	Symptom	Power seat functions of driver's seat do not operate

Possible cause
- Burnt POWER SEAT 30A fuse
- Damaged power seat switch
- Damaged motors
- Open or short circuit in wiring harness
- Poor connection of connector

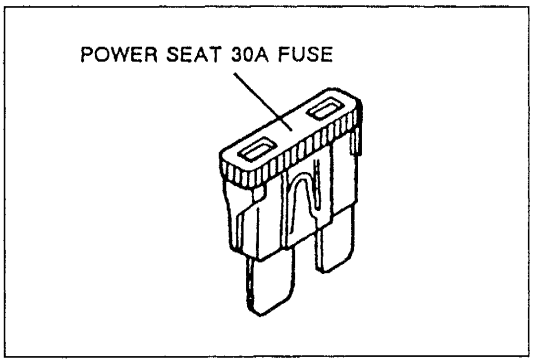

Step 1
Check the POWER SEAT 30A fuse in the fuse block.

Fuse	Action
OK	Go to Step 2
Burnt	Replace fuse after checking and repairing wiring harness

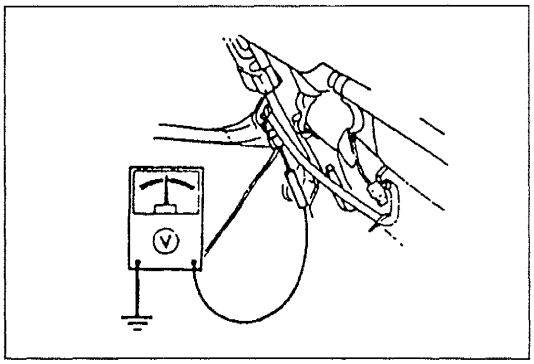

Step 2
Measure the voltage at the (Y) terminal wire of the power seat switch.

B+: Battery positive voltage

Voltage	Action
B+	Go to Step 3
Other	Repair wiring harness (Fuse box—Power seat switch)

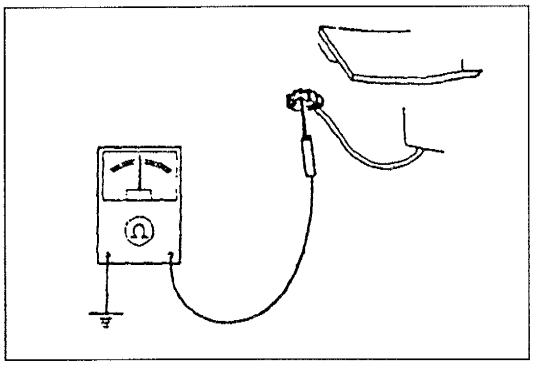

Step 3

Disconnect the power seat switch connector and check for continuity between the (B) terminal wire of the connector and ground.

Continuity	Action
Yes	Reconnect connector and go to Step 4
No	Repair wiring harness (Power seat switch—GND)

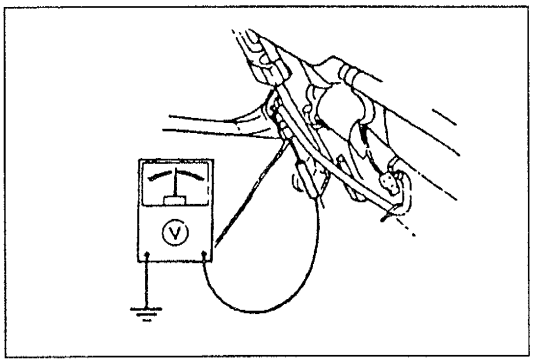

Step 4

1. Measure the voltage at the terminal wires of the power seat motor connectors with the power seat switch in the following positions.

B+: Battery positive voltage

Switch position		Terminal	Voltage
Slide	FORWARD	(G/W) wire	B+
	BACKWARD	(G) wire	B+
Front lift	UP	(R) wire	B+
	DOWN	(R/W) wire	B+
Rear lift	UP	(Y/R) wire	B+
	DOWN	(Y) wire	B+

2. If correct, replace the power seat motors.
3. If not as specified, check the power seat switch. (Refer to page P1–9.)

P1

Flowchart No.2	Symptom	Driver's seat does not slide forward or backward

Possible cause

- Damaged power seat switch
- Damaged slide motor
- Open or short circuit in wiring harness
- Poor connection of connector

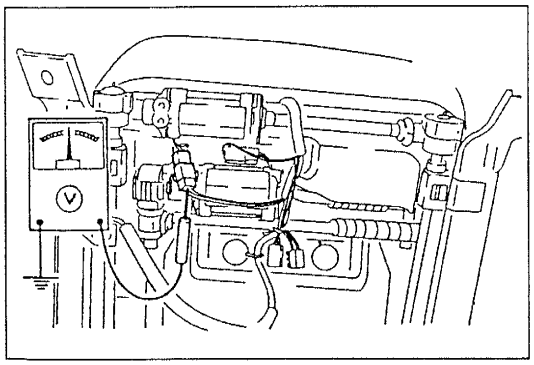

Remedy

1. Measure the voltage at the terminal wires of the slide motor with the power seat switch in the following positions.

B+: Battery positive voltage

Switch position		Terminal	Voltage
Slide	FORWARD	(G/W) wire	B+
	BACKWARD	(G) wire	B+

2. If correct, check the slide motor. (Refer to page P1–9.)
3. If not as specified, repair the wiring harness (power seat switch—slide motor).

Flowchart No.3	Symptom	Front of driver's seat does not move up or down

Possible cause
- Damaged power seat switch
- Damaged front-lift motor
- Open or short circuit in wiring harness
- Poor connection of connector

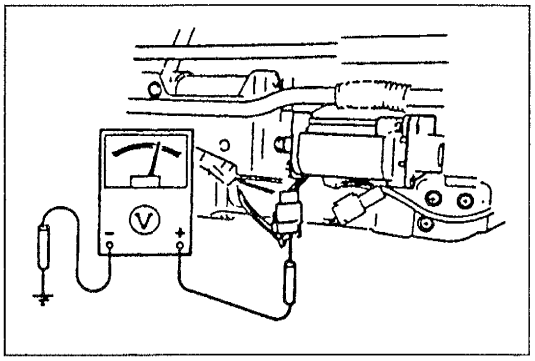

Remedy
1. Measure the voltage at the terminal wires of the front-lift motor with the power seat switch in the following positions.

B+: Battery positive voltage

Switch position		Terminal	Voltage
Front lift	UP	(R) wire	B+
	DOWN	(R/W) wire	B+

2. If correct, check the front-lift motor. (Refer to page P1–10.)
3. If not as specified, repair the wiring harness (power seat switch—front-lift motor).

Flowchart No.4	Symptom	Rear of driver's seat does not move up or down

Possible cause
- Damaged power seat switch
- Damaged rear-lift motor
- Open or short circuit in wiring harness
- Poor connection of connector

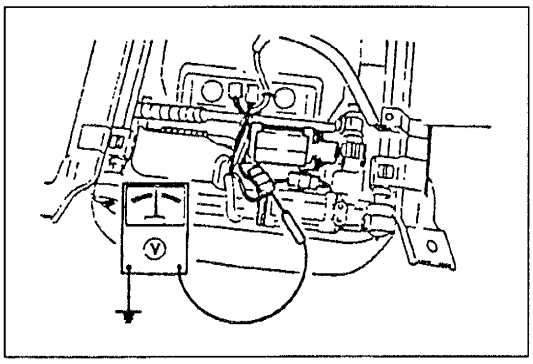

Remedy
1. Measure the voltage at the terminal wires of the rear-lift motor connector with the power seat switch in the following positions.

B+: Battery positive voltage

Switch position		Terminal	Voltage
Rear lift	UP	(Y/R) wire	B+
	DOWN	(Y) wire	B+

2. If correct, check the rear-lift motor. (Refer to page P1–10.)
3. If not as specified, repair the wiring harness (power seat switch—rear-lift motor).

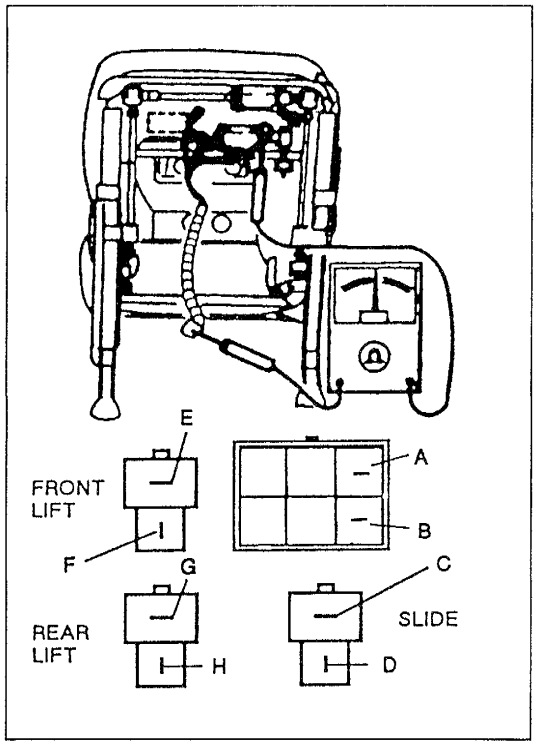

POWER SEAT SWITCH

Inspection

1. Remove the front seat.
   (Refer to the 1996 626/MX-6 Workshop Manual, section S.)
2. Disconnect the motor connectors.
3. Operate the power seat switch and check for continuity between the switch terminals as indicated below.
4. If not as specified, replace the power seat switch.

○–○ : Continuity

Switch operation	Terminal	A	B	C	D	E	F	G	H
Slide	BACKWARD	○	○	○	○				
	FORWARD	○	○	○	○				
Front lift	UP	○	○			○	○		
	DOWN	○	○			○	○		
Rear lift	UP	○	○					○	○
	DOWN	○	○					○	○

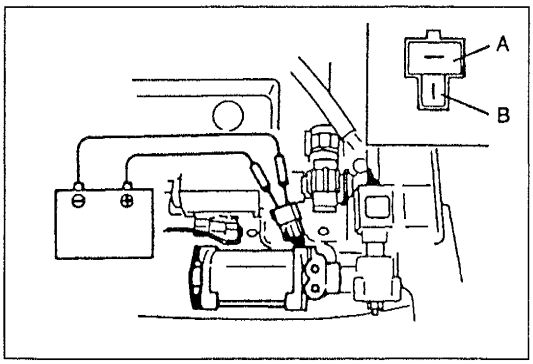

SLIDE MOTOR

Inspection

1. Remove the front seat.
   (Refer to the 1996 626/MX-6 Workshop Manual, section S.)
2. Disconnect the slide motor connector.
3. Apply battery positive voltage to the motor terminals as indicated below and check the operation of the slide motor.

B+: Battery positive voltage

Connection		Motor operation
B+	GND	
A	B	FORWARD
B	A	BACKWARD

4. If not as specified, replace the slide motor.

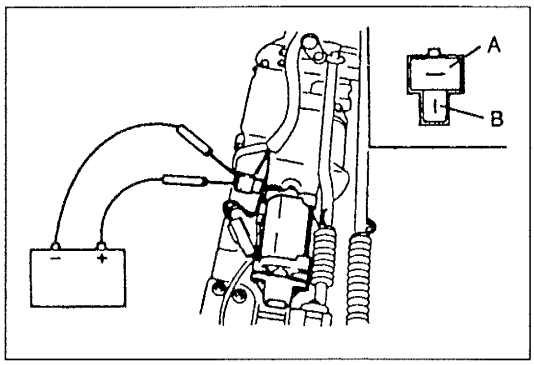

FRONT-LIFT MOTOR

Inspection

1. Remove the front seat.
   (Refer to the 1996 626/MX-6 Workshop Manual, section S.)
2. Disconnect the front-lift motor connector.
3. Apply battery positive voltage to the motor terminals as indicated below and check the operation of the front-lift motor.

B+: Battery positive voltage

Connection		Motor operation
B+	GND	
A	B	UP
B	A	DOWN

4. If not as specified, replace the front-lift motor.

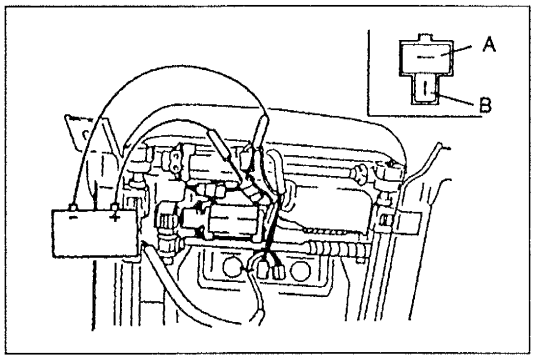

REAR-LIFT MOTOR

Inspection

1. Remove the front seat.
   (Refer to the 1996 626/MX-6 Workshop Manual, section S.)
2. Disconnect the rear-lift motor connector.
3. Apply battery positive voltage to the motor terminals as indicated below and check the operation of the rear-lift motor.

B+: Battery positive voltage

Connection		Motor operation
B+	GND	
A	B	UP
B	A	DOWN

4 If not as specified, replace the rear-lift motor.

COMPONENTS

Disassembly / Assembly

1. Disassemble in the order shown in the figure.
2. Assemble in the reverse order of disassembly.

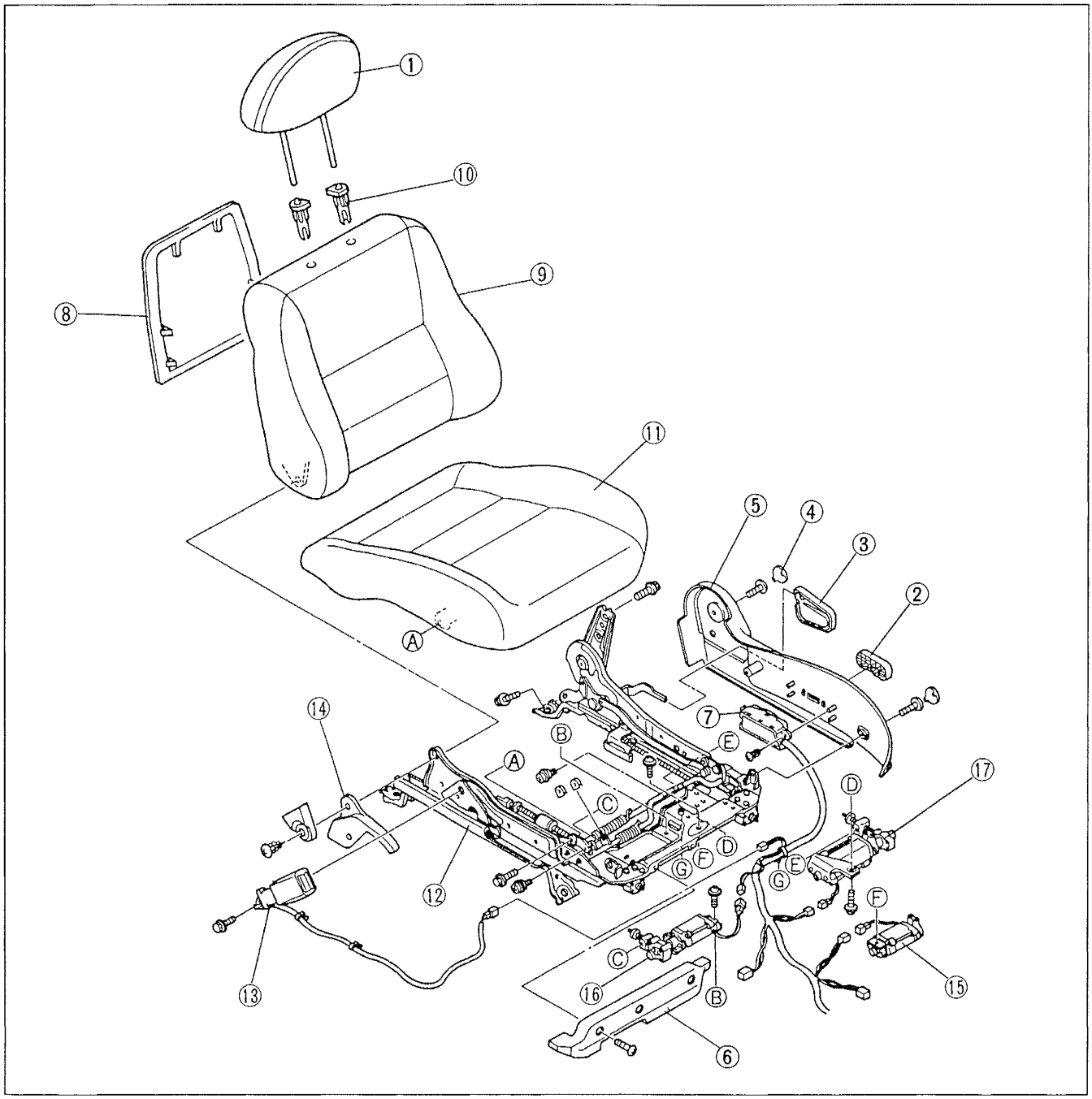

1. Headrest
2. Power seat switch knob
3. Recliner lever
4. Cap
5. Knuckle cover
6. Front cover
7. Power seat switch
   Inspection .....page P1–9
8. Seat back cover
9. Seat back
10. Pole guide
11. Seat cushion
12. Slide adjuster
13. Buckle
14. Cover
15. Slide motor
    Inspection .....page P1– 9
16. Front-lift motor
    Inspection .....page P1–10
17. Rear-lift motor
    Inspection .....page P1–10

Before beginning any service procedure, refer to section S of this manual for air bag system service warnings.

CRUISE CONTROL SYSTEM

CRUISE CONTROL SYSTEM

PREPARATION
SST

49 T088 0A0 NGS set	For diagnosis of cruise control system	49 T088 002 Vehicle Interface Module (Part of 49 T088 0A0)	For diagnosis of cruise control system
49 T088 003 Super MECS Adapter (Part of 49 T088 0A0)	For diagnosis of cruise control system	49 T088 010B Program Card	For diagnosis of cruise control system
49 T088 001 Control Unit (Part of 49 T088 0A0)	For diagnosis of cruise control system	49 T088 005 STAR/DCL Adapter (5 pin) (Part of 49 T088 0A0)	For diagnosis of cruise control system
49 T088 006 Battery Hookup Adapter (Part of 49 T088 0A0)	For diagnosis of cruise control system	49 T088 008A Instruction Manual	For diagnosis of cruise control system

STRUCTURAL VIEW

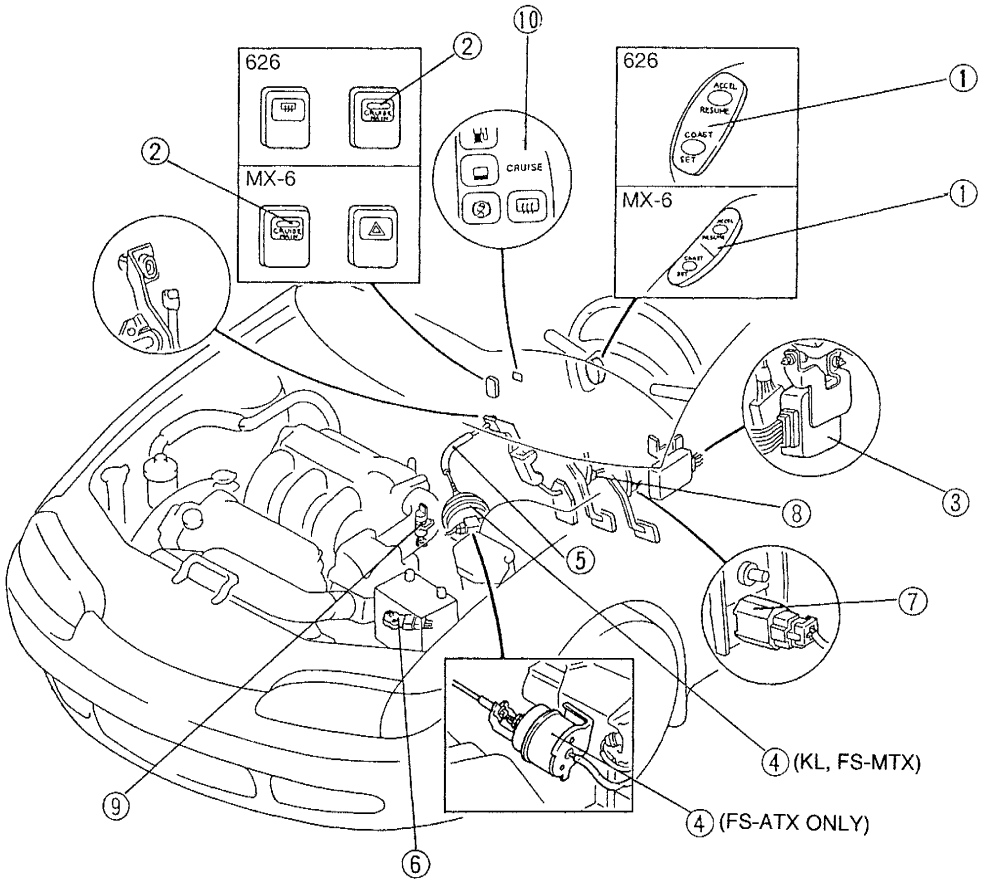

1. Cruise control switch
   Removal / Installation ..... section Z4
   Inspection ..... section Z4
2. Cruise control main switch
   Inspection ..... section Z4
3. Cruise control module
   Removal / Installation ..... page Q–14
   Inspection ..... page Q–15
4. Cruise actuator
   Removal / Installation ..... page Q–17
   Inspection ..... page Q–18
5. Actuator cable
   Removal / Installation ..... page Q–18
   Adjustment ..... page Q–19
6. Transaxle range switch (ATX)
   Inspection ..... page Q–19
7. Clutch switch (MTX)
   Removal / Installation ..... page Q–20
   Inspection ..... page Q–20
8. Brake switch
   Inspection ..... page Q–21
9. Vehicle speedometer sensor
   Removal / Installation ..... section C1
   Inspection ..... section C1
10. Cruise set indicator light
    (in instrument cluster)

SYSTEM DIAGRAM

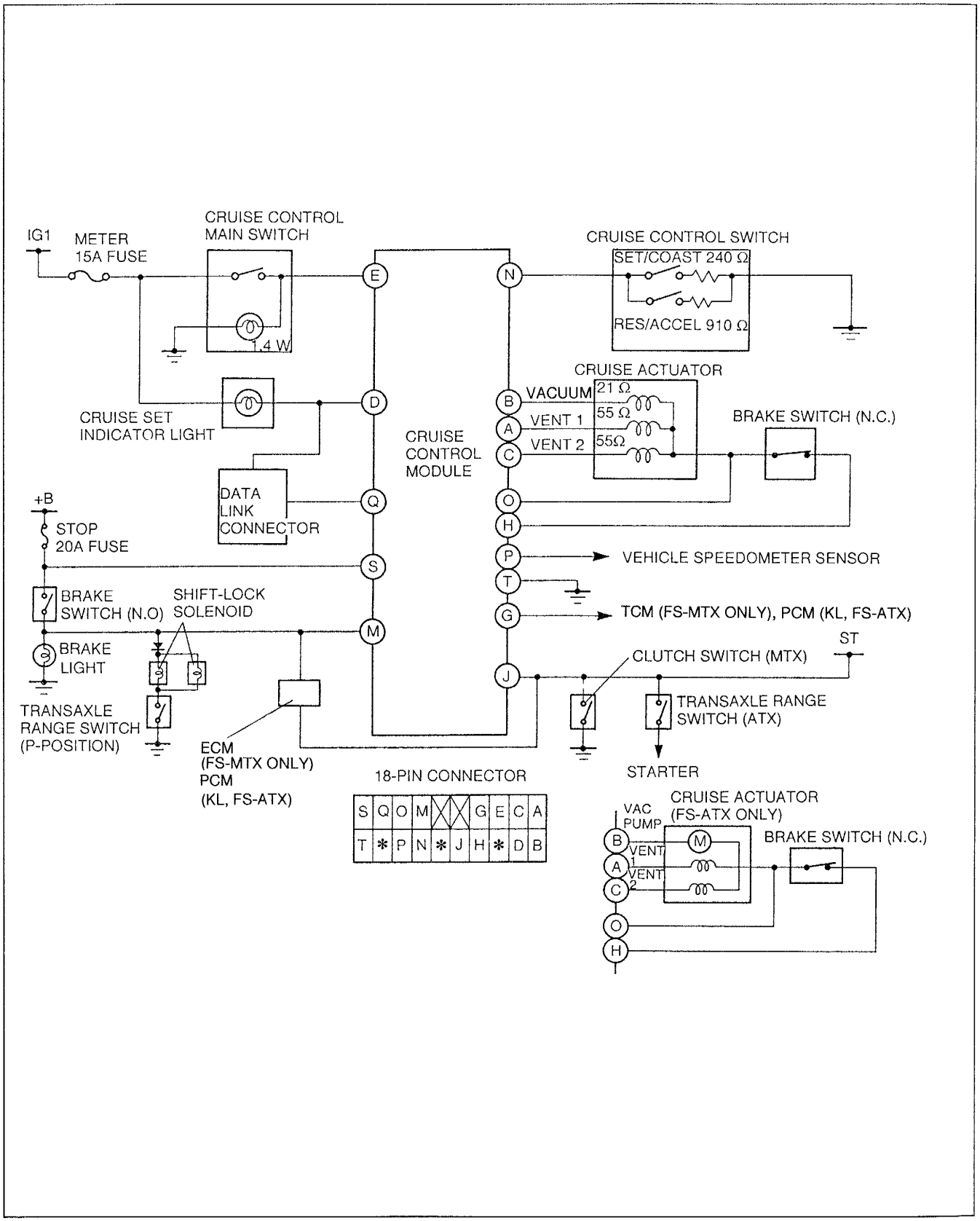

Description

The cruise control system is comprised of the cruise control main switch, cruise set indicator light, brake switch, cruise control switch, cruise actuator, clutch switch (MTX), transaxle range switch (ATX), and vehicle speedometer sensor.

Operation

- The cruise control system will maintain a desired vehicle speed under normal driving conditions. The system may be used to cause the vehicle to accelerate, coast, and resume the desired speed when cruise control is temporarily canceled.
- The cruise control module receives input from the brake switch, cruise control main switch, cruise control switch, clutch switch (MTX), transaxle range switch (ATX), and vehicle speedometer sensor. The cruise control module sends output signals to the cruise actuator. The cruise actuator operates vacuum valves, which adjust the accelerator linkage, to control the vehicle speed based on the input signals.

SYSTEM COMPONENTS AND FUNCTIONS

Component	Function
Vehicle speedometer sensor	AC signals from vehicle speedometer sensor (in transaxle) are transformed to DC signals at speedometer. These speed signals are sent to cruise control module.
Cruise control module	Microcomputer controls all functions-vehicle speed set, resume, coast (decelerate), and cancel. Cruise control module contains on-board diagnostic function.
Cruise actuator	Operates vacuum valves, which adjust accelerator linkage, and adjusts vehicle speed based on cruise control module signals.
Cruise control main switch	Controls on/off of cruise control system's main power.
SET/COAST switch	SET ..... Sets cruise control speed. COAST .... Decreases set speed.
RESUME/ACCEL switch	RESUME .... Returns vehicle to set speed if vehicle speed is 40 km/h {25 MPH} or more when cruise control is temporarily canceled. ACCEL ..... Increases set speed.
Brake switch	Disengages cruise control system when brake pedal is depressed.
Clutch switch (MTX)	Cancels set speed when clutch pedal is depressed.
Cruise set indicator light	Indicates problems in cruise control system by coded flashes.
Transaxle range switch (ATX)	Cancels set speed when selector lever shifted to P or N position.

CIRCUIT DIAGRAM

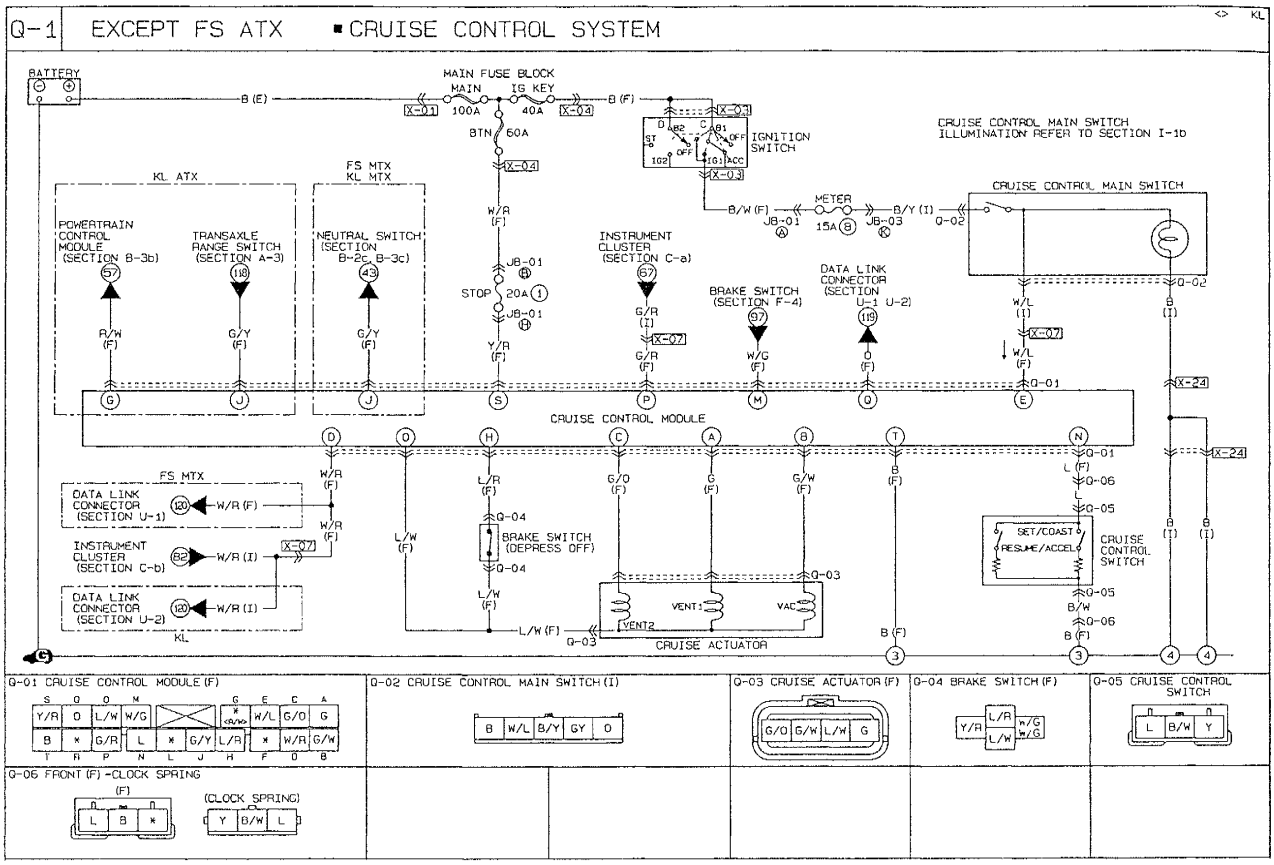

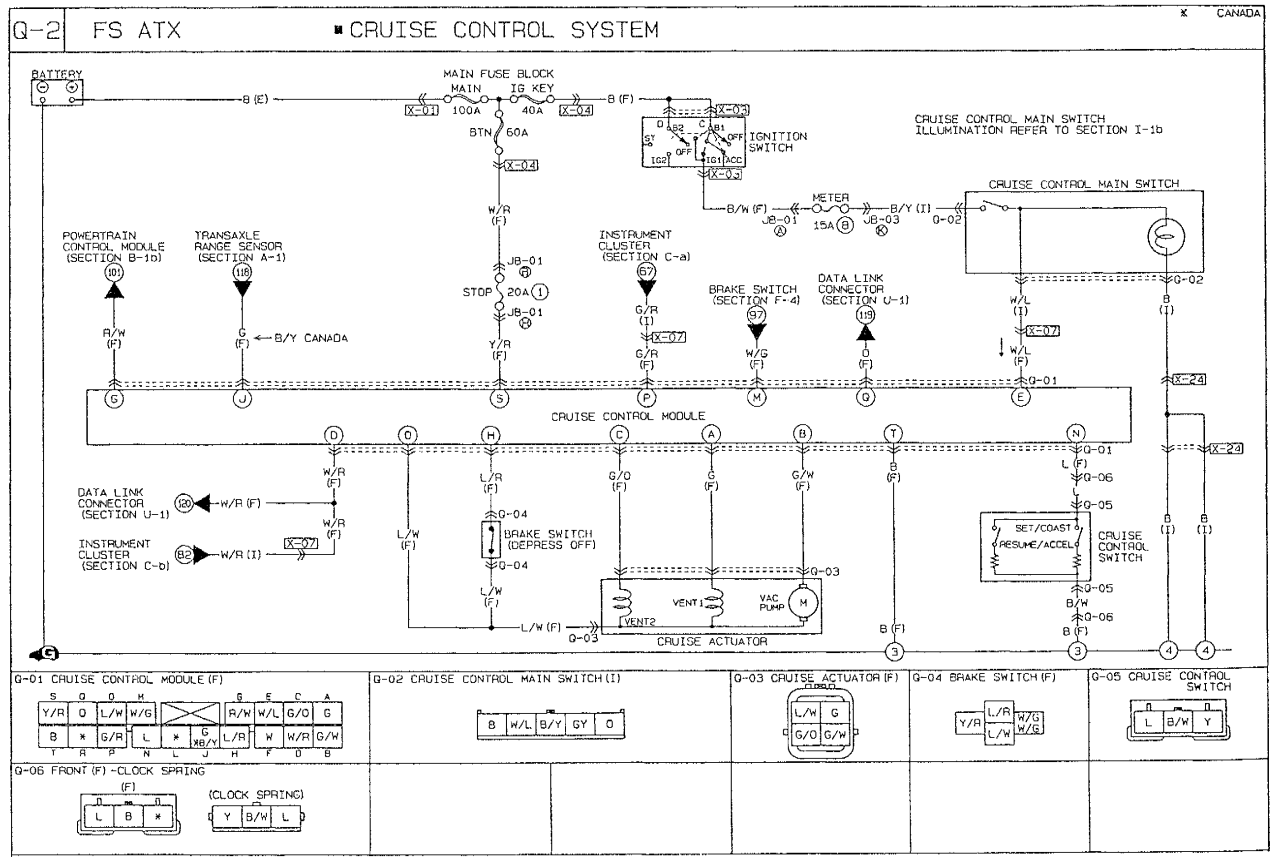

CONNECTOR LOCATIONS

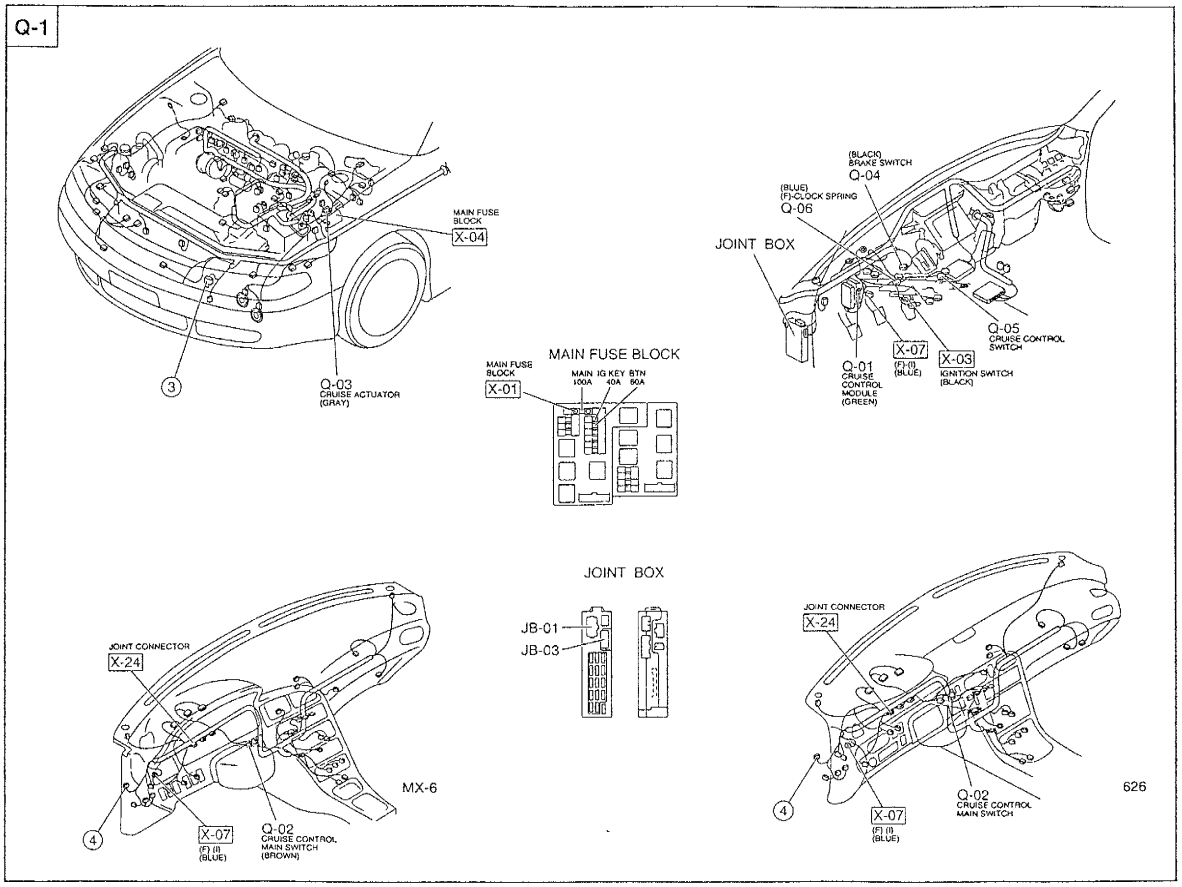

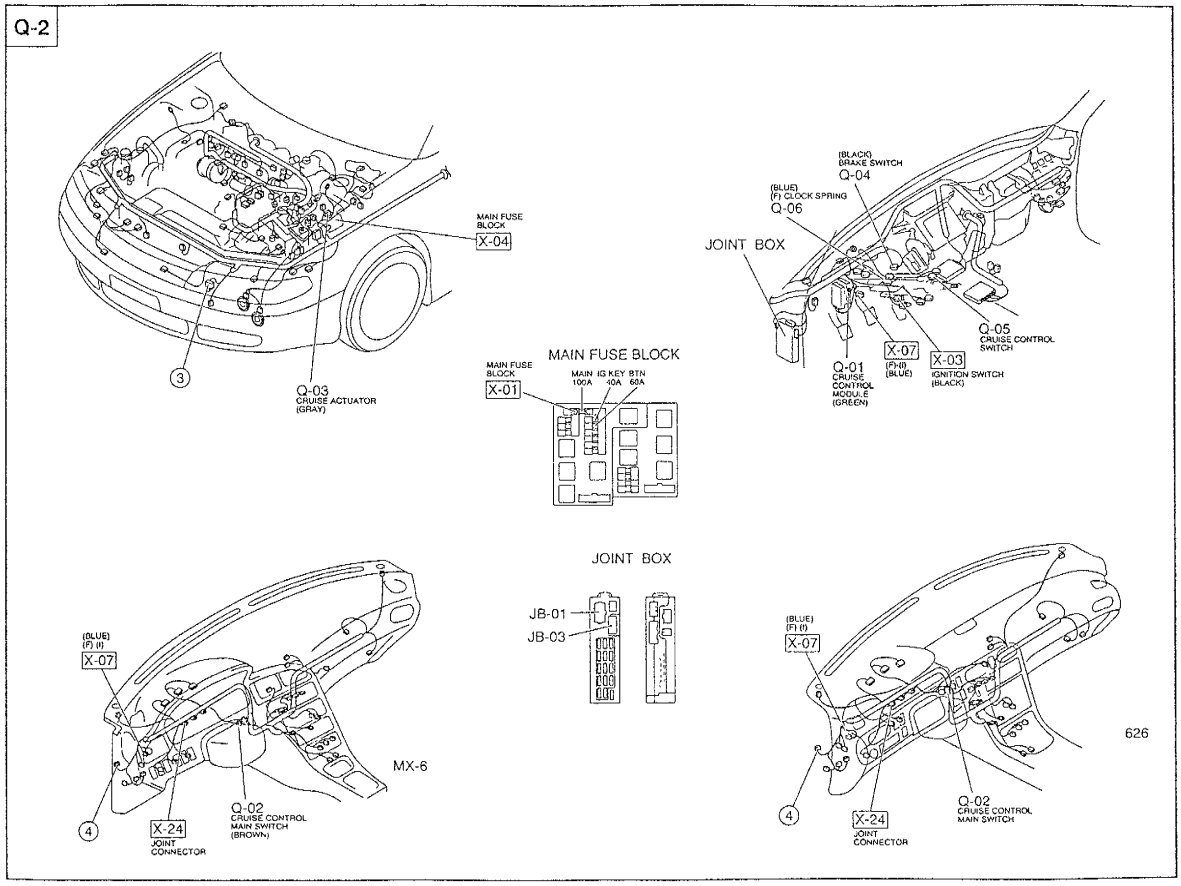

ON-BOARD DIAGNOSTIC

Outline

- There are two on-board diagnostic functions: Condition Detection Mode, which indicates trouble in the system; and Operation Mode, which checks for and indicates correct operation of the input signals to the control module.
- The two functions can be done by using either of the following methods:
  1) Checking the output of the data link connector by using the **SST** (NGS set)
  2) Checking the flashing pattern of the cruise set indicator light

Operation Order

Use Condition Detection Mode or Operation Mode or both to inspect the cruise control system. Either diagnostic function can be done before the other. If one diagnostic function does not locate the trouble, carry out the other function.

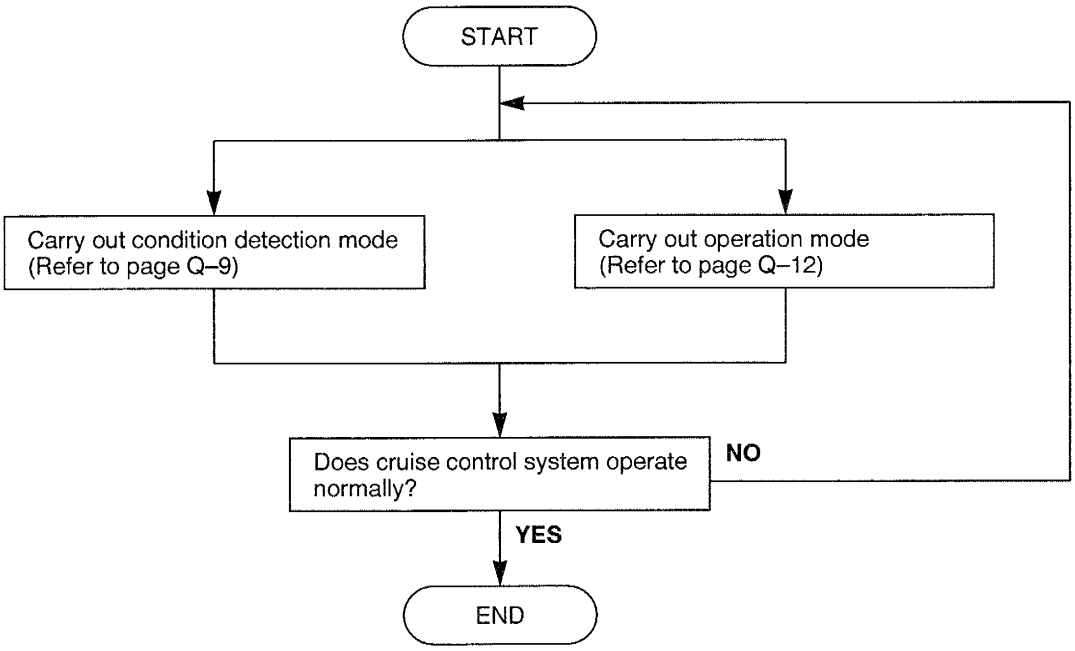

Condition Detection Mode Using NGS

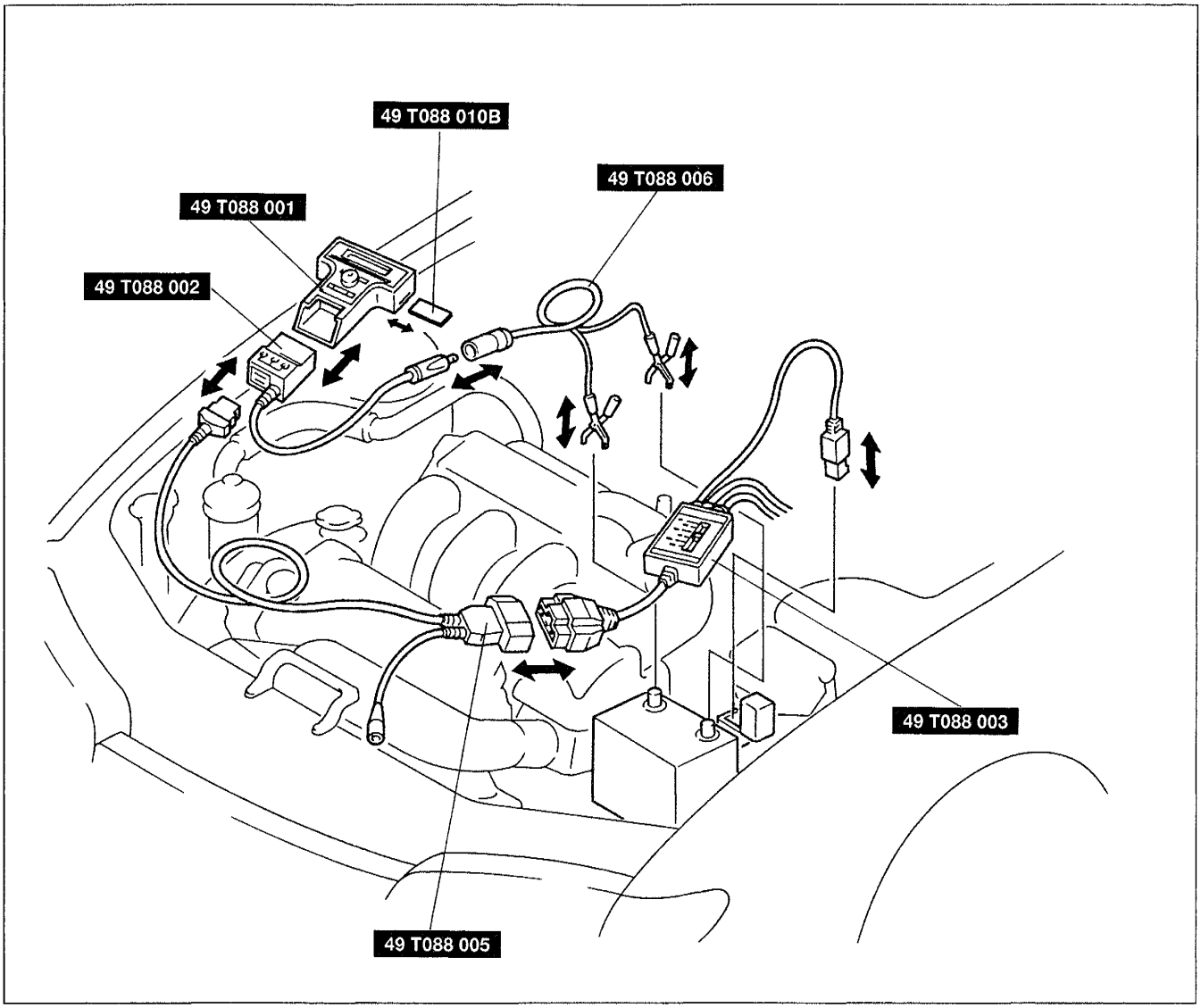

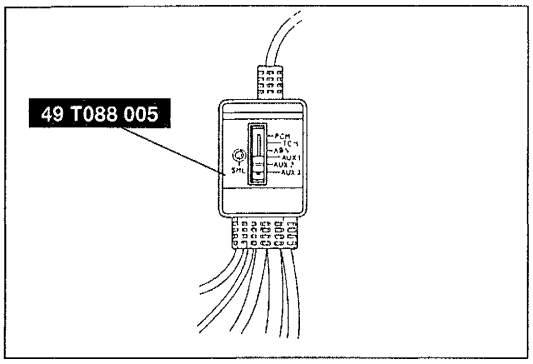

1. Connect the **SST** (NGS) to the data link connector and battery.
2. Set the **SST** (Super MECS Adapter) to AUX 2.

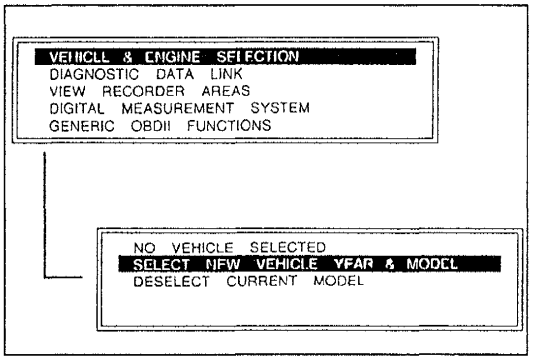

3. Select "VEHICLE & ENGINE SELECTION" on the **SST** (Control Unit) display, and then select the vehicle model, engine type, and model year.

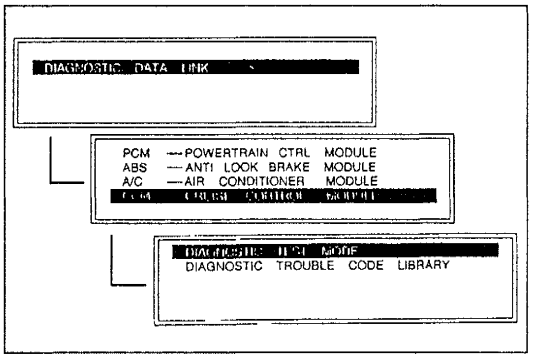

4. Select "DIAGNOSTIC DATA LINK" on the **SST** (Control Unit) display.
5. Select "CCM-CRUISE CONTROL MODULE" on the **SST** (Control Unit) display, and then select the "DIAGNOSTIC TEST MODE".

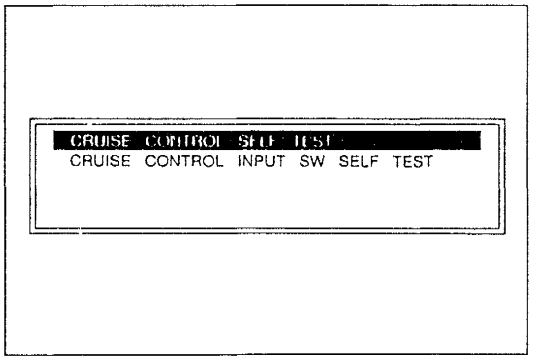

6. Select "CRUISE CONTROL SELF TEST" on the **SST** (Control Unit) display.
7. (1) If a diagnostic trouble code is displayed, refer to the diagnostic trouble code table (Refer to page Q–11) and inspect the appropriate system area.
   (2) If "NO CODES RECEIVED" is displayed, the system areas shown in the diagnostic trouble code table are OK. Inspect another system area.
8. After the problems are corrected, repeat the condition detection mode procedure to verify that the system is operating normally.

Canceling condition detection mode

To cancel condition detection mode, do any one of the following:

- Turn off the cruise control main switch.
- Turn the ignition switch to LOCK.

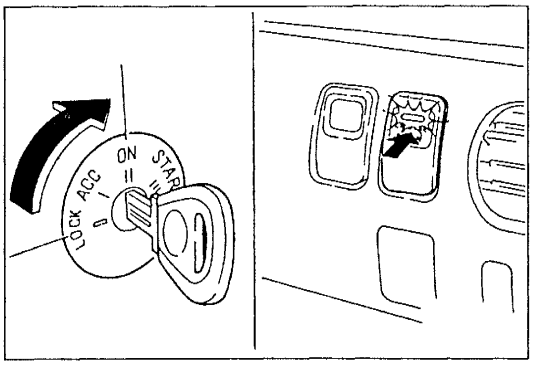

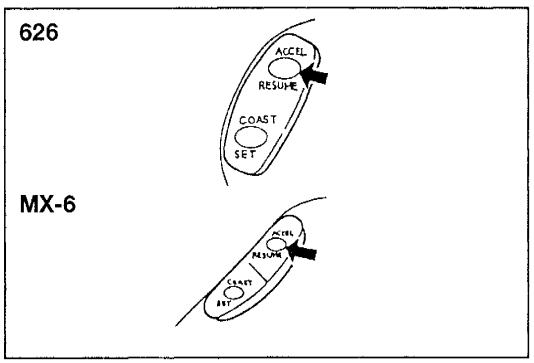

Using cruise set indicator light

Reference

- If the RESUME/ACCEL switch on the cruise control switch is malfunctioning, the cruise set indicator light will not give a correct indication when you inspect the system. Use the **SST** (NGS set) to determine the cause of the malfunction.
  (Refer to page Q–9.)

Inspection

1. Turn the ignition switch to ON.
2. Turn the cruise control main switch on.
3. Press and hold the RESUME/ACCEL switch for at least 3 seconds to activate the self-diagnosis system. The cruise set indicator light will illuminate for 3 seconds and then go out for at least 2 seconds.
4. If a problem is present, the cruise set indicator light will flash in one of the patterns shown on page Q–11.
   If there is no problem in the system, the light will not flash.

Canceling condition detection mode

To cancel condition detection mode, do any one of the following:

- Turn off the cruise control main switch.
- Turn the ignition switch to LOCK.
- Drive the vehicle at over 16 km/h {10 MPH}.

Diagnostic trouble code table

If there are two or more problems in the cruise control system, the problem with the highest priority will be indicated.

Priority	DTC	Display on the NGS	Possible cause	Action
1	1	ACTUATOR OR STOPLIGHT SW DEFECT – > W/M	Defective wiring (Actuator—Cruise control module; Brake switch—Cruise control module) Defective wiring (Cruise control module—GND) Defective actuator or brake switch	Repair wiring harness Inspect ground circuit Inspect actuator Inspect brake switch
2	5	STOP FUSE OR WIRING—BLOWOUT, DEFECT	Burnt STOP 20A fuse Defective wiring (Fuse—Cruise control module)	Replace fuse Repair wiring harness
3	7	STOPLIGHT SW AND BRAKE SW—DEFECT	Two switches in the brake switches are on simultaneously	Inspect brake switch
4	11	CRUISE CONTROL SW—DEFECT (ALWAYS ON)	Defective cruise control switch	Inspect cruise control switch
5	15	CRUISE CONTROL UNIT—DEFECT	Defective cruise control module	Replace cruise control module

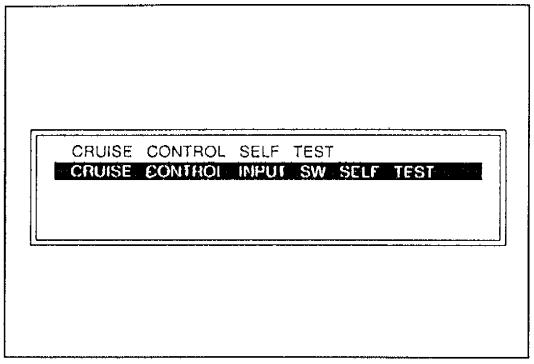

Operation Mode
Using NGS

1. Carry out steps 1—5 of the condition detection mode procedure.
   (Refer to page Q–9.)
2. Select "CRUISE CONTROL INPUT SW SELF TEST" on the **SST** (Control Unit) display.
3. Operate each switch as it is shown on the **SST** (Control Unit) display and note the diagnostic trouble code.
4. Refer to the diagnostic trouble code table on page Q–13. If the diagnostic trouble code shown in the table does not appear on the **SST** (Control Unit) display, inspect the corresponding system area.
5. After the problems are corrected, repeat the operation mode procedure to verify that the system is operating normally.

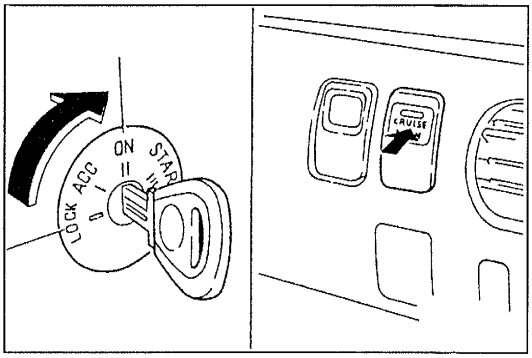

Using cruise set indicator light
Inspection

1. Turn the ignition switch to ON.
2. Verify that the cruise control main switch is off.
3. Shift the transaxle to D or R range. (ATX)
   Do not depress the clutch pedal. (MTX)

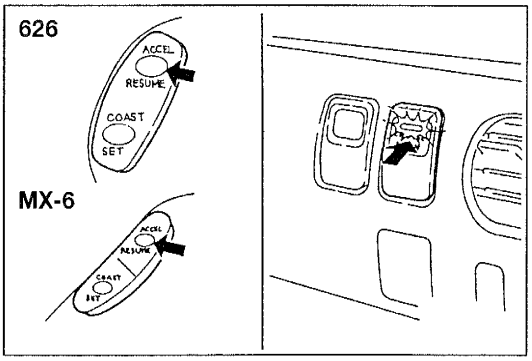

4. Press the RESUME/ACCEL switch and the cruise control main switch simultaneously to activate system inspection. (The cruise set indicator light will illuminate.)
5. Operate each switch as described and note the diagnostic trouble code pattern. If the cruise set indicator light does not flash, inspect the corresponding system area.

Canceling operation mode

To cancel operation mode, do any one of the following:

- Turn off the cruise control main switch.
- Turn the ignition switch to LOCK.

Diagnostic trouble code table

The table below shows the code numbers and flash patterns that will be indicated if the system is operating correctly.

Procedure	Normal		Malfunction	
	DTC	Display on the NGS	Possible cause	Action
Press SET/COAST switch	21	SET/COAST SW—PRESS	Defective cruise control switch Defective wiring (Cruise control module—SET/COAST switch—GND)	Inspect cruise control switch Repair wiring harness
Press RESUME/ACCEL switch	22	RESUME/ACCEL SW—PRESS	Defective RESUME/ACCEL switch Defective wiring (Cruise control module—RESUME/ACCEL switch—GND)	Inspect cruise control switch Repair wiring harness
Press brake pedal	31	BRAKE PEDAL—DEPRESS	Defective brake switch Defective wiring (Cruise control module—Brake switch—GND)	Inspect brake switch Repair wiring harness
• Turn ignition switch to ON • Shift transaxle to P or N range	35	P OR N RANGE (NEUTRAL POSITION)—SHIFT	Defective transaxle range switch Defective wiring (Cruise control module—Transaxle range switch	Inspect transaxle range switch Repair wiring harness
Drive vehicle above 40 km/h {25 MPH}	37	VEHICLE SPEED—ABOVE 40 KM/H (25 MPH)	Defective vehicle speedometer sensor or speedometer Defective wiring (Cruise control module—Speedometer—Vehicle speedometer sensor	Inspect vehicle speedometer sensor Inspect speedometer Repair wiring harness

CRUISE CONTROL MODULE

Removal / Installation

1. Remove in the order shown in the figure.
2. Install in the reverse order of removal.
3. After installing the cruise control module, verify that the cruise set indicator light in the instrument cluster illuminates when the ignition switch and cruise control main switch are on.

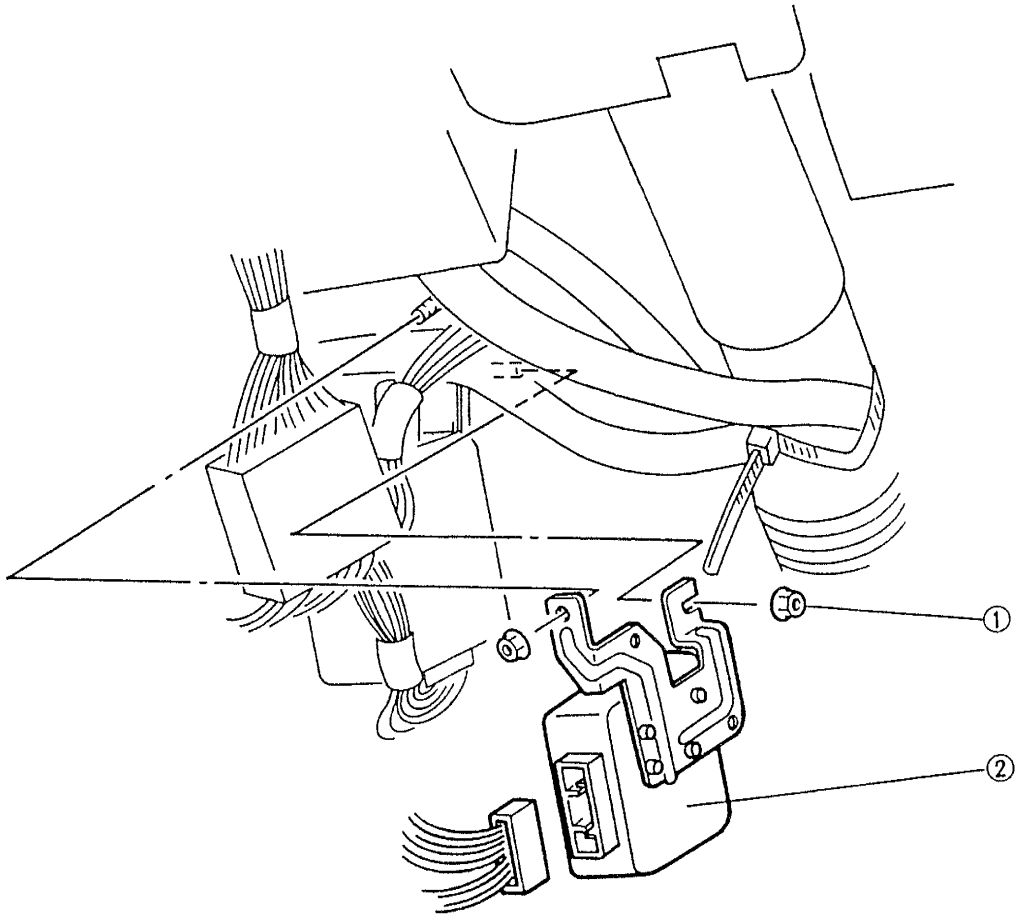

1. Nut
2. Cruise control module

Inspection

1. Pull out the cruise control module with the cruise control module connector connected. (Refer to page Q–14.)
2. Measure the voltage at the cruise control module terminals as indicated below.
3. If not as specified, inspect the parts listed under "Inspection area" and the related wiring harnesses.
4. If the parts and wiring harnesses are OK but the system still does not work properly, replace the cruise control module.

Terminal voltage list

B+: Battery positive voltage

Terminal	Signal	Connection	Test condition		Voltage	Inspection area
A	Cruise actuator on signal	Vacuum pump (control valve)	Ignition switch at ON	Cruise control main switch on	9 V	• METER 15 A fuse • Cruise control main switch • Vacuum pump
				Other	0 V	
B	Cruise actuator on signal	Vacuum pump (motor)	Ignition switch at ON	Cruise control main switch on	9 V	• METER 15 A fuse • Cruise control main switch • Brake switch • Vacuum pump
				Other	0 V	
C	Cruise actuator on signal	Vacuum pump (release valve)	Ignition switch at On	Cruise control main switch on	9 V	• METER 15 A fuse • Cruise control main switch • Brake switch • Vacuum pump
				Other	0 V	
D	IG1	Instrument cluster (cruise set indicator light) Data link connector	Ignition switch at ON		B+	• METER 15 A fuse • Cruise set indicator light bulb
			Cruise set indicator light illuminated		0 V	
E	Cruise control main switch on/off signal	Cruise control main switch	Ignition switch at ON	Cruise control main switch off side pushed	0 V	• METER 15 A fuse • Cruise control main switch
				Other	B+	
F	—	—	—		—	—
G	O/D off signal	PCM (KL, FS-ATX) TCM (FS-MTX ONLY)	Ignition switch at ON		B+	PCM (KL, FS-ATX) TCM (FS-MTX ONLY)
H	Brake on signal	Brake switch	Ignition switch at ON and cruise control main switch	Release brake pedal	9 V	• METER 15 A fuse • Cruise control main switch • Brake switch
				Depress brake pedal	B+	
J	ATX Selector lever position signal	Transaxle range switch	Ignition switch at ON	N or P range	0 V	Transaxle range switch
				Other	B+	
	MTX Clutch switch on signal	Clutch switch	Ignition switch at ON	Depress clutch pedal	0 V	Clutch switch
				Other	B+	
L	—	—	—		—	—
M	Brake on signal	Brake switch	Depress brake pedal		B+	• STOP 20 A fuse • Brake switch
			Other		0 V	

Cont'd

B+: Battery positive voltage

Terminal	Signal	Connection	Test condition		Voltage	Inspection area
N	Cruise control switch on signal	Cruise control switch	Ignition switch at ON and cruise control main switch on		5 V	• METER 15 A fuse • Cruise control main switch • Clock spring • Cruise control switch
			Ignition switch at ON and cruise control main switch	SET/COAST switch pushed	2 V	
				RESUME/ACCEL switch pushed	3 V	
O	Brake on signal	Brake switch	Ignition switch at ON and cruise control main switch	Release brake pedal	9 V	• METER 15 A fuse • Cruise control main switch • Brake switch
				Depress brake pedal	0 V	
P	Vehicle speedometer sensor on signal	Vehicle speedometer sensor	Front tires rotating		Alternates 0 V and 5 V	• Vehicle speedometer sensor • Instrument cluster
Q	TEST signal	Data link connector	—		—	—
R	—	—	—		—	—
S	+B	STOP 20 A fuse	Constant		B+	STOP 20 A fuse
T	GND	GND	Check for continuity to ground		Yes	GND

CRUISE ACTUATOR

Removal / Installation

1. Remove in the order shown in the figure.
2. Install in the reverse order of removal.

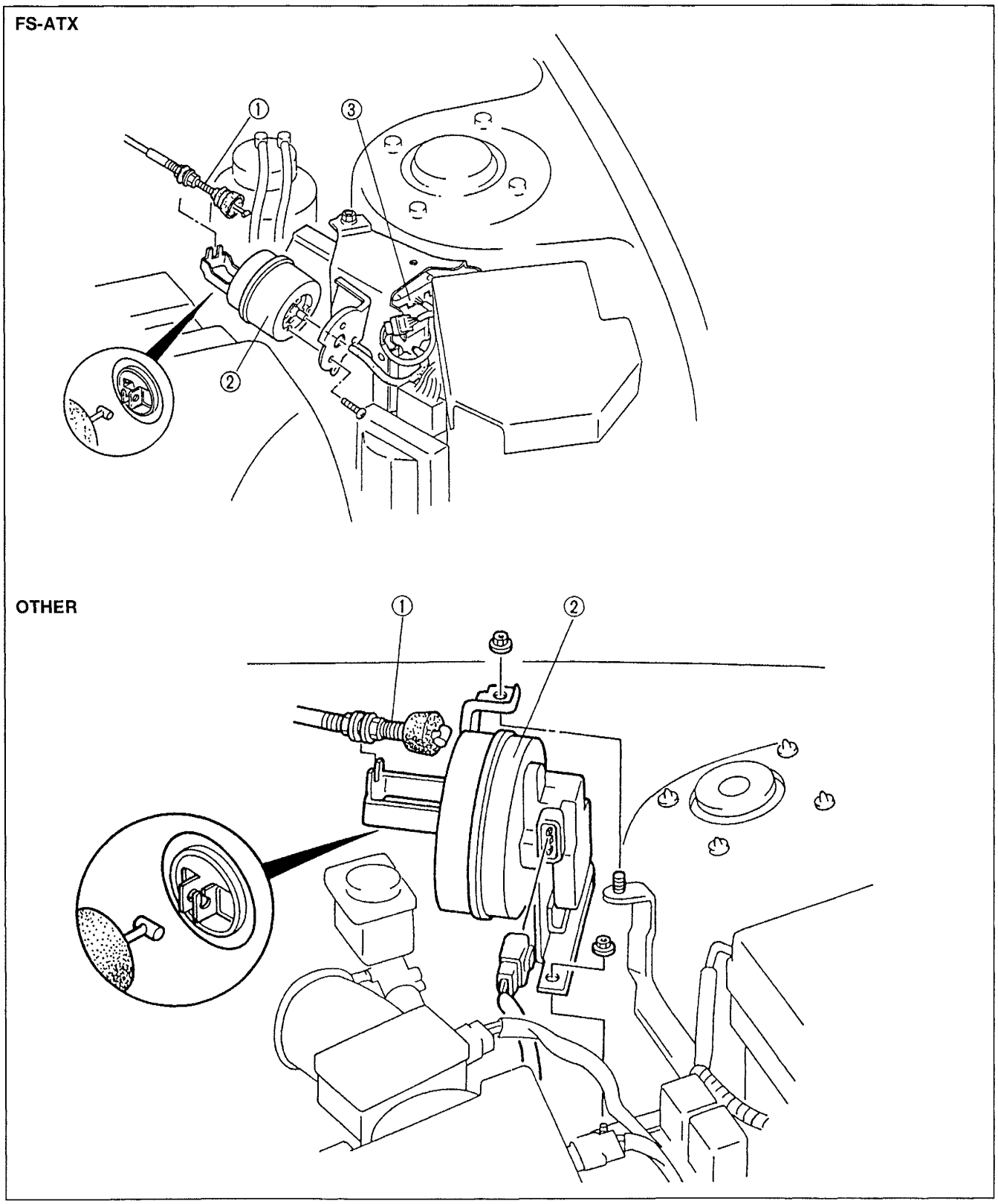

1. Actuator cable
   Removal / Installation ..... page Q–18
   Adjustment ..... page Q–19
2. Cruise actuator
3. Vacuum pump (FS-ATX)

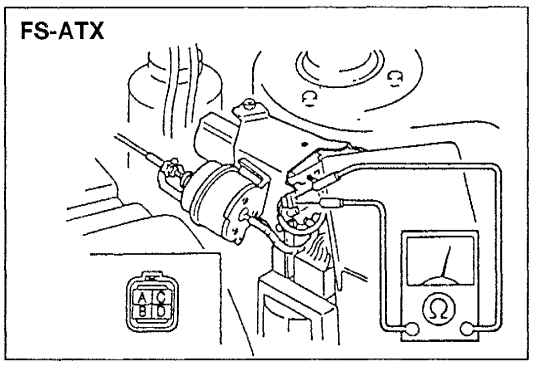

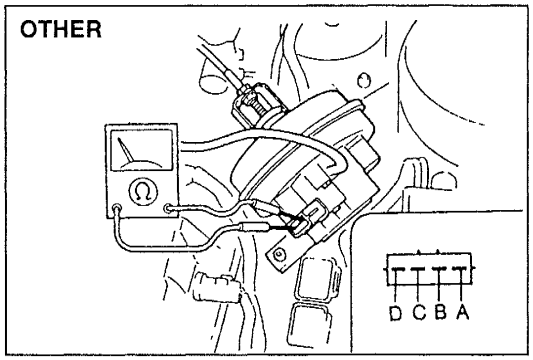

Inspection

1. Disconnect the cruise actuator connector.
2. Measure the cruise actuator resistance.

Terminal		Resistance (Ω)
FS-ATX	Other	
A–C	B–A	55
—	B–C	21
A–B	B–D	55
B–C	—	110
D–B	—	60
D–C	—	60
A–D	—	6

3. If not as specified, replace the cruise actuator. (Refer to page Q–17.)

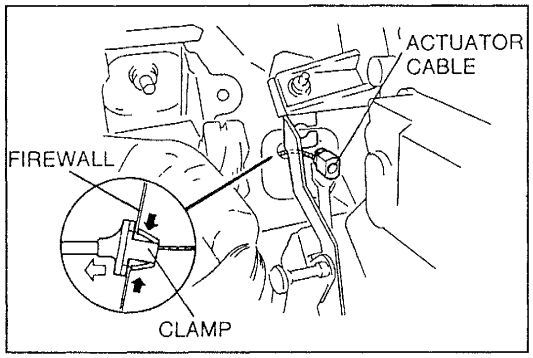

ACTUATOR CABLE

Removal / Installation

1. Disconnect the actuator cable from the accelerator pedal.
2. Remove the clamp at the inside of the firewall.

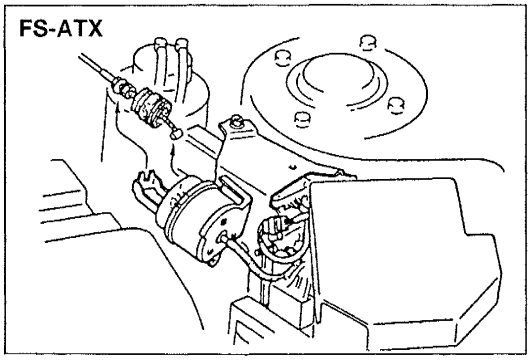

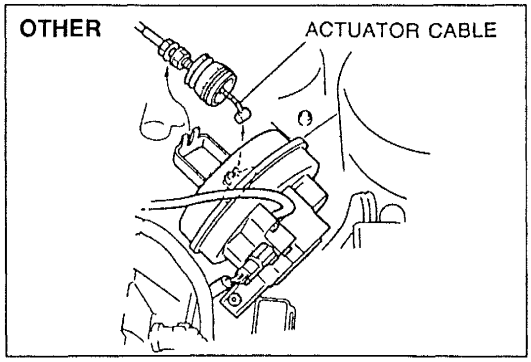

3. Disconnect the actuator cable from the cruise actuator.
4. Remove the clamps and the actuator cable.
5. Install in the reverse order of removal.

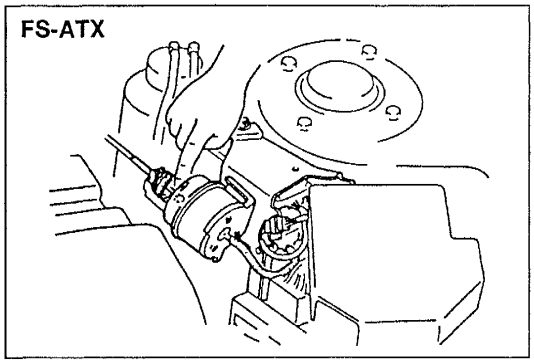

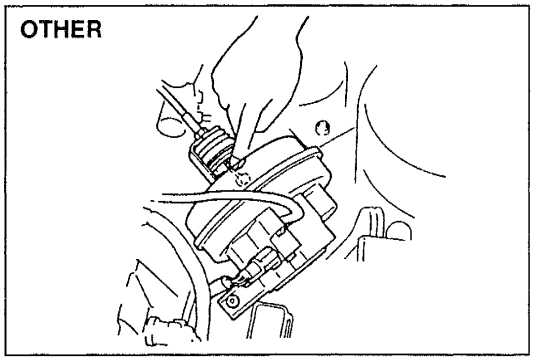

Adjustment

Adjust the nut so that the actuator cable free play is as shown when the cable is pressed lightly.

Cable play on both the cruise actuator side and throttle body side: 1.0—5.0 mm {0.04—0.19 in}

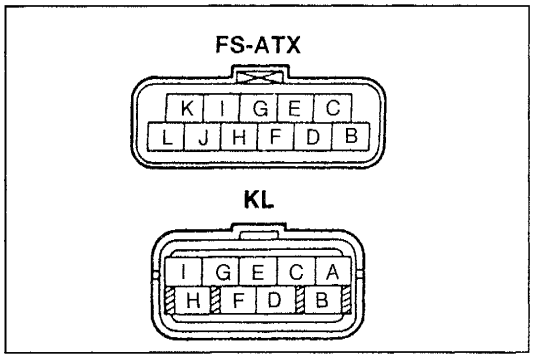

TRANSAXLE RANGE SWITCH (ATX)

Inspection

1. Remove the air cleaner housing assembly, the fresh-air duct, and the resonance chamber.
   (Refer to the 1996 626/MX-6 Workshop Manual, section F.)
2. Disconnect the transaxle range switch connector.
3. Check for continuity between terminals B and H (KL) or E and F (FS-ATX) of the transaxle range switch.

Position	Continuity
P or N	Yes
Other	No

4. If not as specified, adjust or replace the transaxle range switch.
   (Refer to the 1996 626/MX-6 Workshop Manual, section K.)

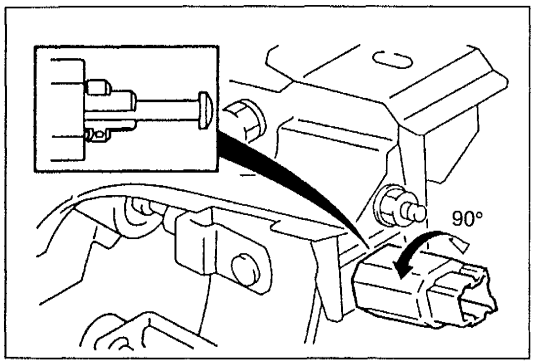

CLUTCH SWITCH (MTX)

Removal / Installation

1. Disconnect the clutch switch connector.
2. Turn the clutch switch **90°** and pull it out.
3. Install in the reverse order of removal.

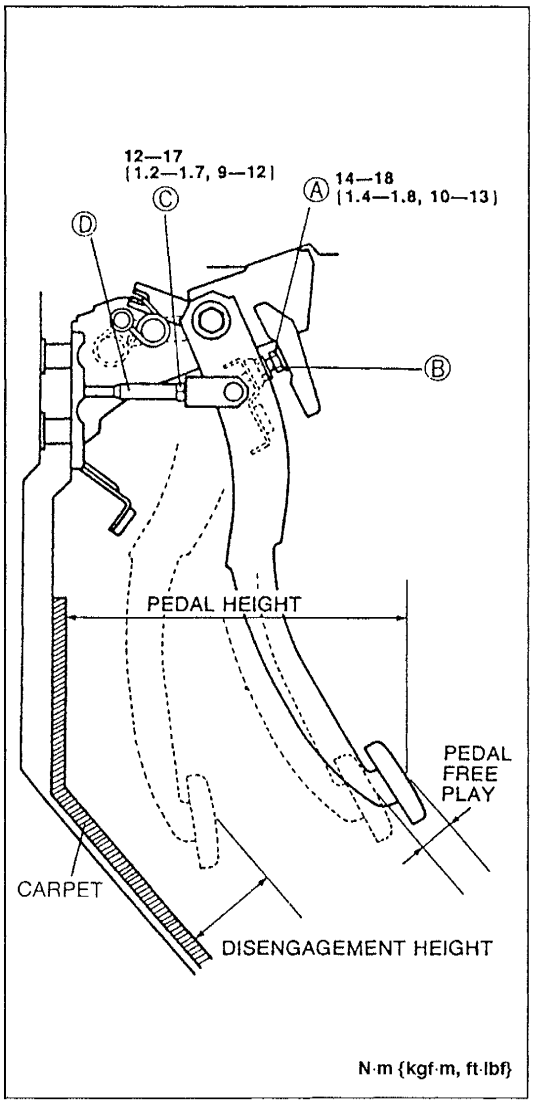

Inspection

1. Measure the clutch pedal height. If not as specified, loosen locknut A. Adjust the pedal height by turning adjusting bolt B. Retighten locknut A when the specified height is reached.

   Pedal height: 186—211 mm {7.32—8.31 in}
   (with carpet)

2. Measure the clutch pedal free play. If not as specified, adjust loosen locknut C and turn push rod D. Then retighten the locknut.

   Pedal free play: 1.0—3.0 mm {0.04—0.12 in}

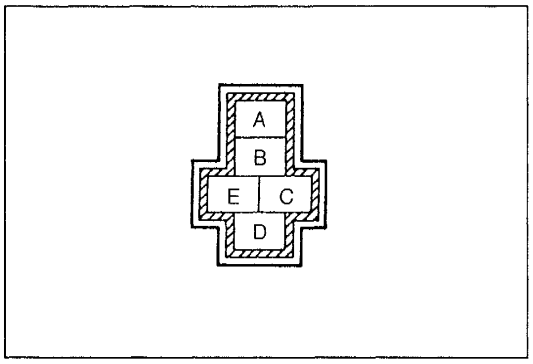

3. Disconnect the clutch switch connector.
4. Check for continuity between the switch terminals.

○—○ : Continuity

Terminal / Clutch pedal	B	C	D	E
Depressed		○		○
Released	○		○	

5. If not as specified, replace the clutch switch.
   (Refer to the 1996 626/MX-6 Workshop Manual, section F.)

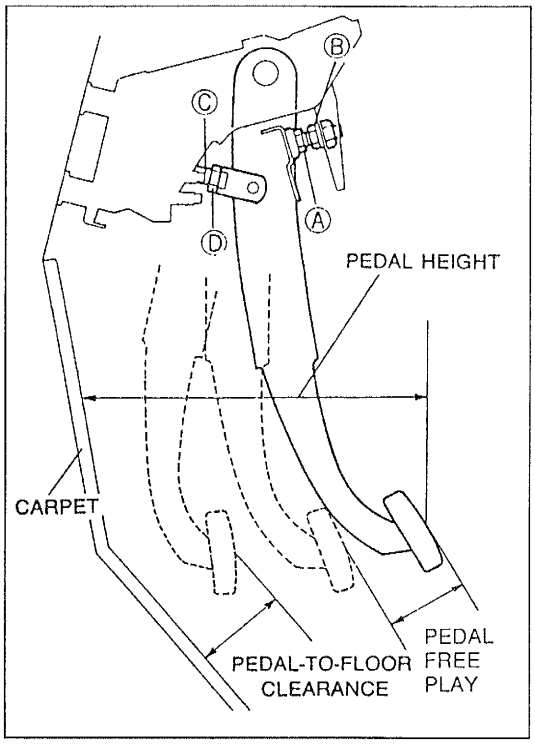

BRAKE SWITCH

Inspection

1. Measure the brake pedal height. If not as specified, loosen locknut A. Adjust the pedal height by turning adjusting bolt B. Retighten locknut A when the specified height is reached.

   Pedal height: 191.5—196.5 mm {7.54—7.74 in} (with carpet)

2. Measure the brake pedal free play. If not as specified, loosen locknut C and turn push rod D. Then retighten the locknut.

   Pedal free play: 4—12 mm {0.16—0.47 in}

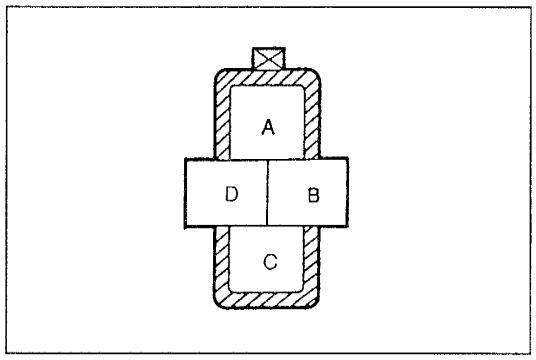

3. Disconnect the brake switch connector.
4. Check for continuity between the switch terminals.

O–O : Continuity

Terminal / Brake pedal	A	B	C	D
Released		O		O
Depressed	O		O	

5. If not as specified, replace the brake switch. (Refer to the 1996 626/MX-6 Workshop Manual, section P.)

AIR BAG SYSTEM

AIR BAG SYSTEM

PREPARATION
SST

49 H066 002 Deployment tool 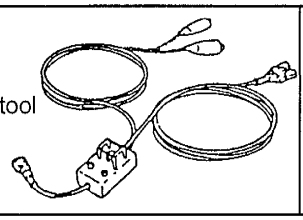	For deployment of air bag module	49 0839 285 Checker, fuel thermometer 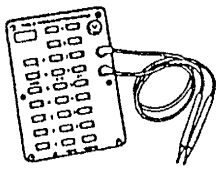	For inspection of air bag system

STRUCTURAL VIEW

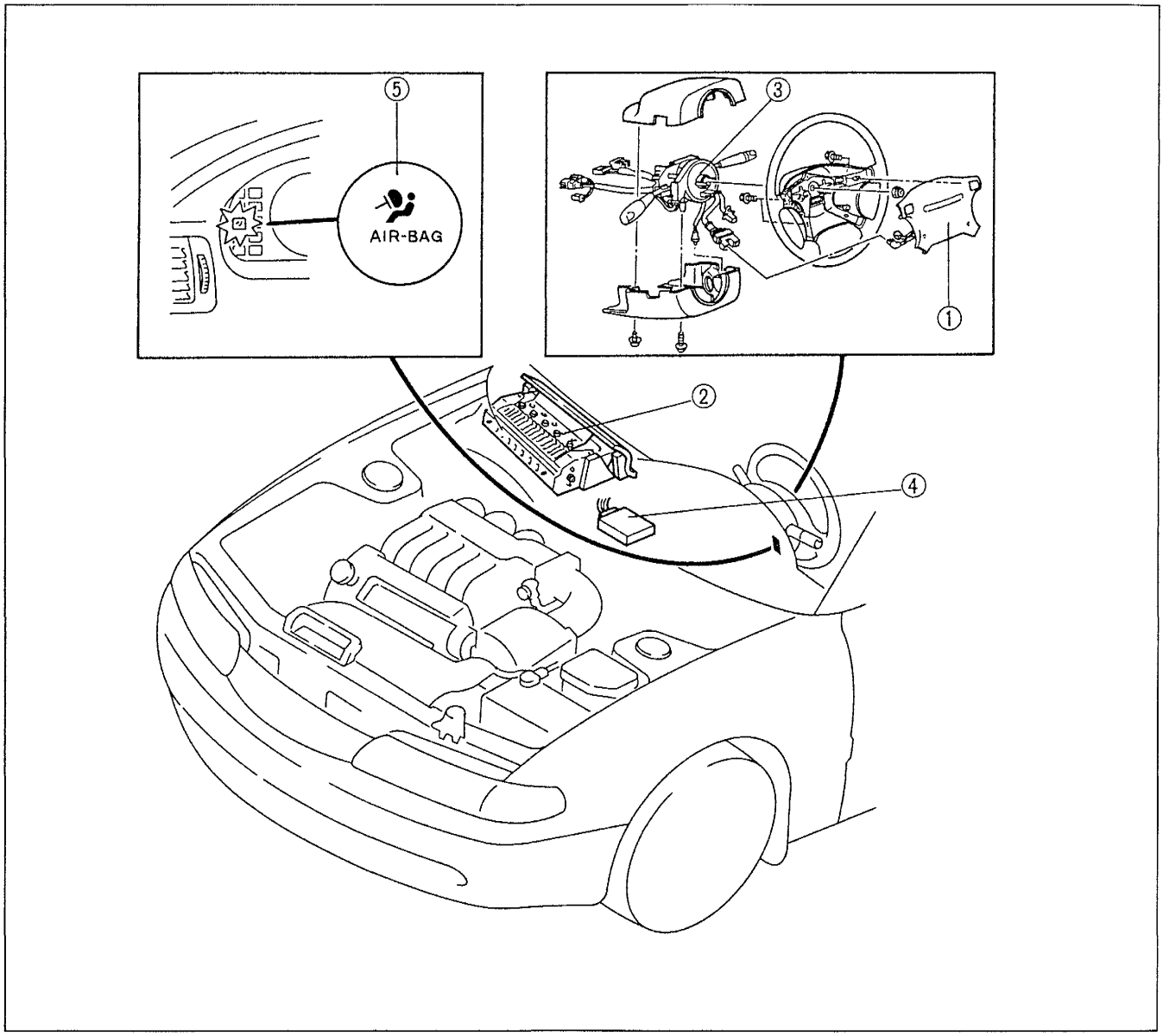

1. Driver-side air bag module
   Removal / Installation ..... page S–18
   Disposal procedure ..... page S–23
2. Passenger-side air bag module
   Removal / Installation ..... page S–20
   Disposal procedure ..... page S–23
3. Clock spring
   Removal / Installation ..... section Z4
   Inspection ..... page S–21
4. SAS-unit
   Removal / Installation ..... page S–22
5. Air bag system warning light

COMPONENT DESCRIPTION

Component	Function	Remarks
Air bag system warning light	Illuminates or flashes if malfunction occurs in air bag system.	Located in instrument cluster
Air bag module	Deploys air bag when current flows to integrated igniter.	Location: Driver-side···in steering wheel hub Passenger-side···above glove compartment
Clock spring	Ensures uninterrupted electrical connection to air bag module while allowing steering wheel to turn.	Part of combination switch
SAS-unit	Controls air bag system via built-in control module. Detects vehicle deceleration during collision via built-in crash sensor.	—

SYSTEM DIAGRAM

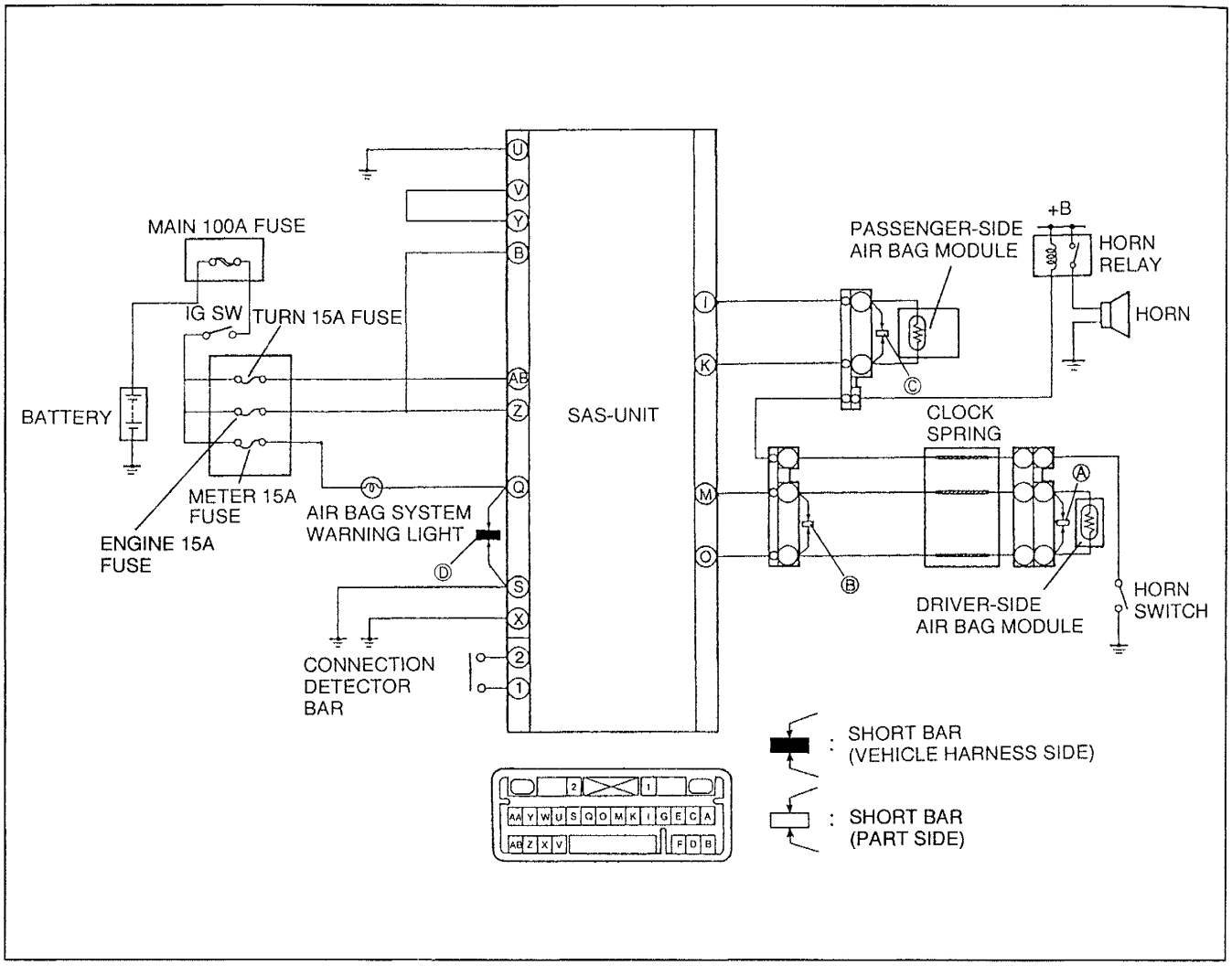

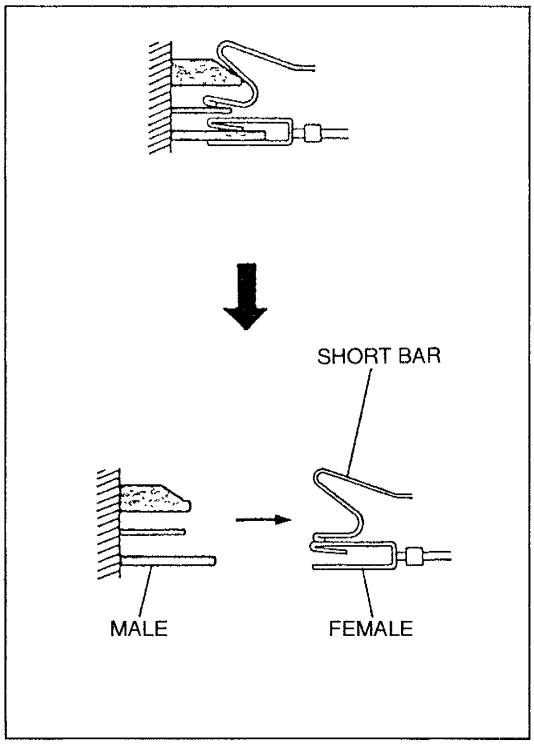

Short Bar

- A short bar is used to short between two terminals when a connector is disconnected.

  : installed on the vehicle harness side

  : installed on the part side

- There are short bars in four locations in this system: A, B, C and D.
  1) Short bats A, B and C prevent the air bag modules from activating when the connector is disconnected.
  2) Short bar D keeps the air bag system warning light illuminated when the ignition switch is at ON and the SAS-unit connector is disconnected.

Operation

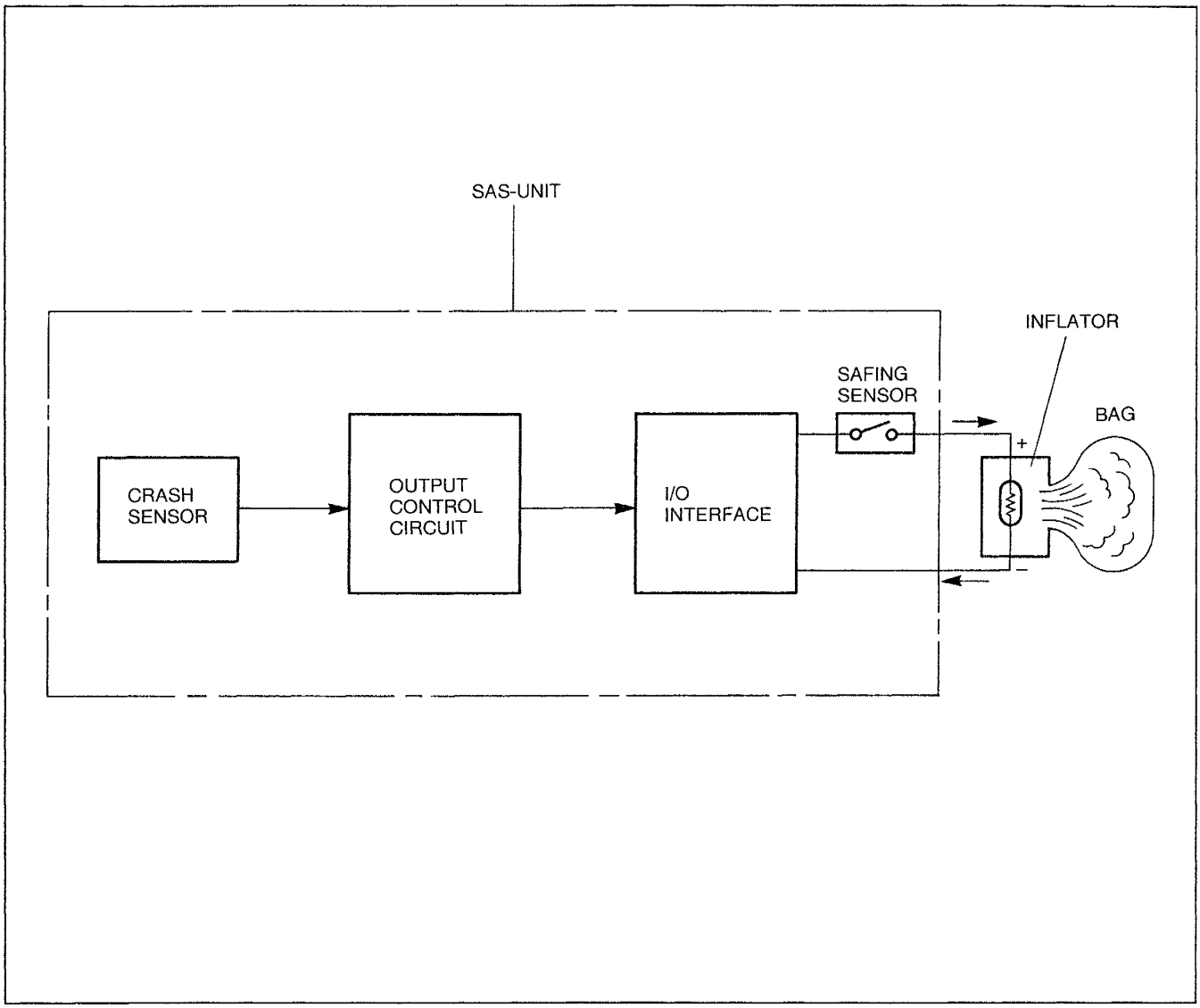

- When the crash sensor in the SAS-unit detects vehicle deceleration due to the shock of a collision, it outputs an electric signal and simultaneously, the safing sensor detects this and turns on.
  The output control circuit calculates the input electric signal and determines whether or not to send the signal to the I/O (input/output) interface. If the calculated value is more than the value set in the output control circuit, the electric signal is sent to the inflator via the safing sensor.
  When the inflator receives the signal from the I/O interface, the inflator generates nitrogen gas to deploy the air bag modules. The bags release the nitrogen gas from a vent hole in the back of the bag to reduce shock to the driver and passenger and to allow easier exit from the vehicle.

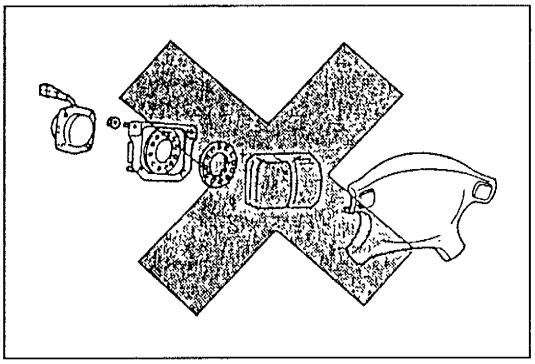

SERVICE WARNINGS

Component Disassembly

- Disassembling and reassembling the components of the air bag system can render the system inoperative, which may result in serious injury or death in the event of an accident. Do not disassemble any air bag system components.

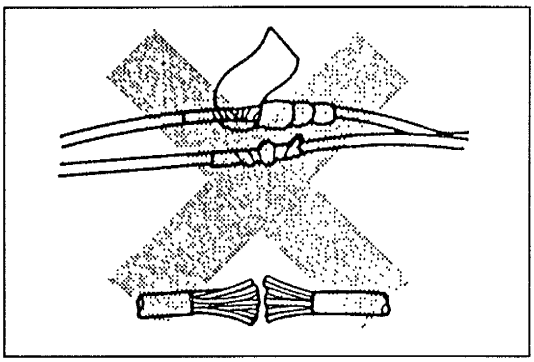

Wiring Harness Repair

- Incorrectly repairing an air bag system wiring harness can accidently deploy the air bag, which can cause serious injury. If a problem is found in the system wiring, replace the wiring harness. Do not try to repair it.

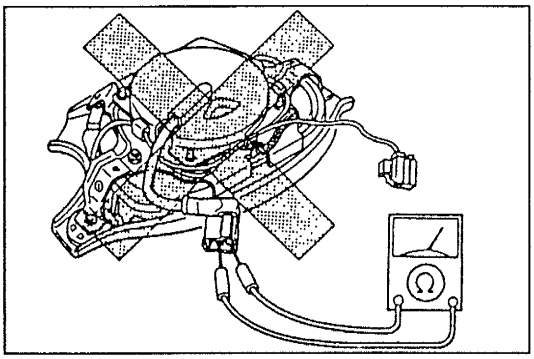

Air Bag Module Inspection

- Inspecting the air bag module with an ohmmeter can deploy the air bag, which can cause serious injury.
  Do not use an ohmmeter to inspect the air bag module.

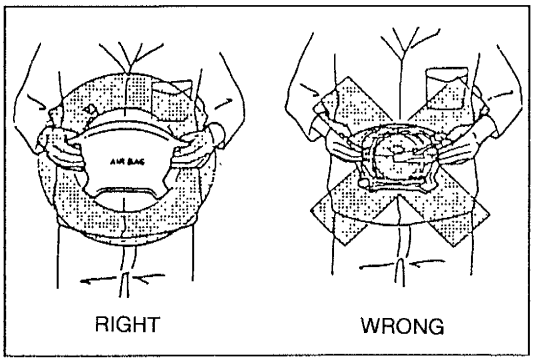

Air Bag Module Handling

- A live (undeployed) air bag may accidently deploy when it is handled and cause serious injury.
  When carrying a live air bag module, point the trim cover away from your body to lessen the chance of injury in case it deploys.

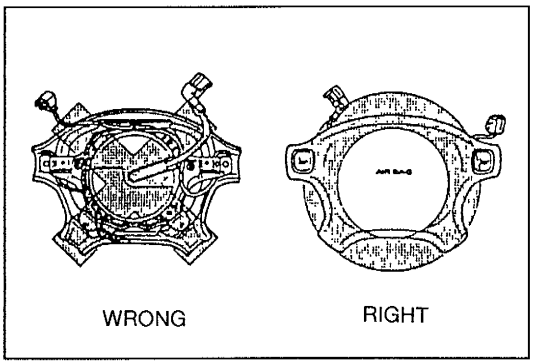

- A live air bag placed face down on a surface is dangerous. If the air bag deploys, the motion of the module can cause serious injury. Always face the trim cover up to reduce the motion of the module in case it accidently deploys.

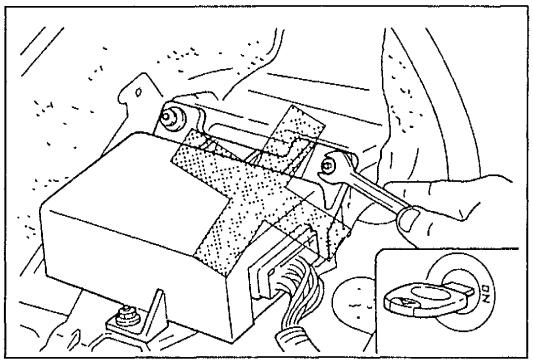

SAS-unit Handling

- **Disconnecting the SAS-unit connector or removing the SAS-unit with the ignition switch at ON can cause the air bag to deploy, which may seriously injure you. Before disconnecting the SAS-unit connector or removing the SAS-unit, turn the ignition switch to LOCK.**

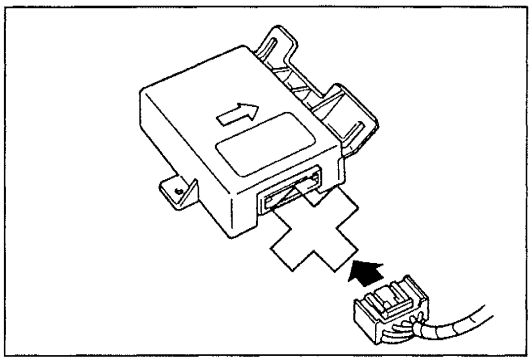

- **Connecting the SAS-unit connector before installing the SAS-unit is dangerous. The shock of installation can cause the air bag to deploy, which may seriously injure you. Before connecting the SAS-unit connector, firmly mount the SAS-unit to the vehicle.**

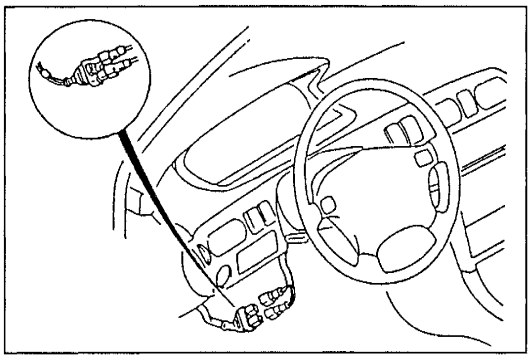

GENERAL PROCEDURES

Before Servicing

1. Turn the ignition switch to LOCK.
2. Disconnect the negative battery cable and wait for more than one minute to allow the backup power supply to deplete its stored power.
3. Remove the undercover and lower panel on the driver-side.
   (Refer to the 1996 626/MX-6 Workshop Manual, section S.)
4. Disconnect the orange and blue clock spring connectors.

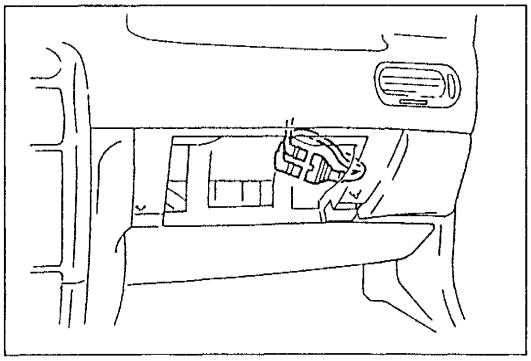

5. Remove the glove compartment.
   (Refer to the 1996 626/MX-6 Workshop Manual, section S.)
6. Disconnect the passenger-side air bag module connector.

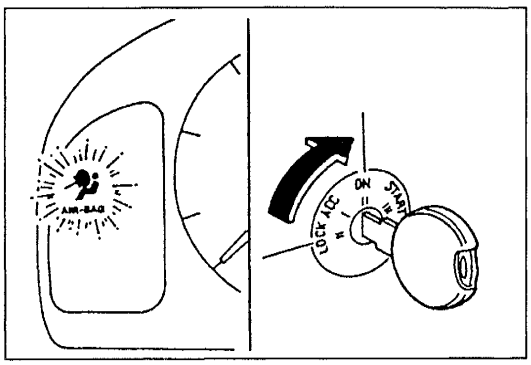

After Servicing

1. Connect the negative battery cable.
2. Turn the ignition switch to ON.
3. Verify that the air bag system warning light illuminates for 4—8 seconds and then goes off.

TROUBLESHOOTING

Troubleshooting Procedure

The SAS-unit has an on-board diagnostic function that flashes or illuminates the air bag system warning light to indicate trouble in the air bag system. The trouble can be determined by the warning light illumination or flashing pattern. If the light does not illuminate but the system still has trouble, a warning buzzer will sound 5 cycles of 5 times each.

Flowchart

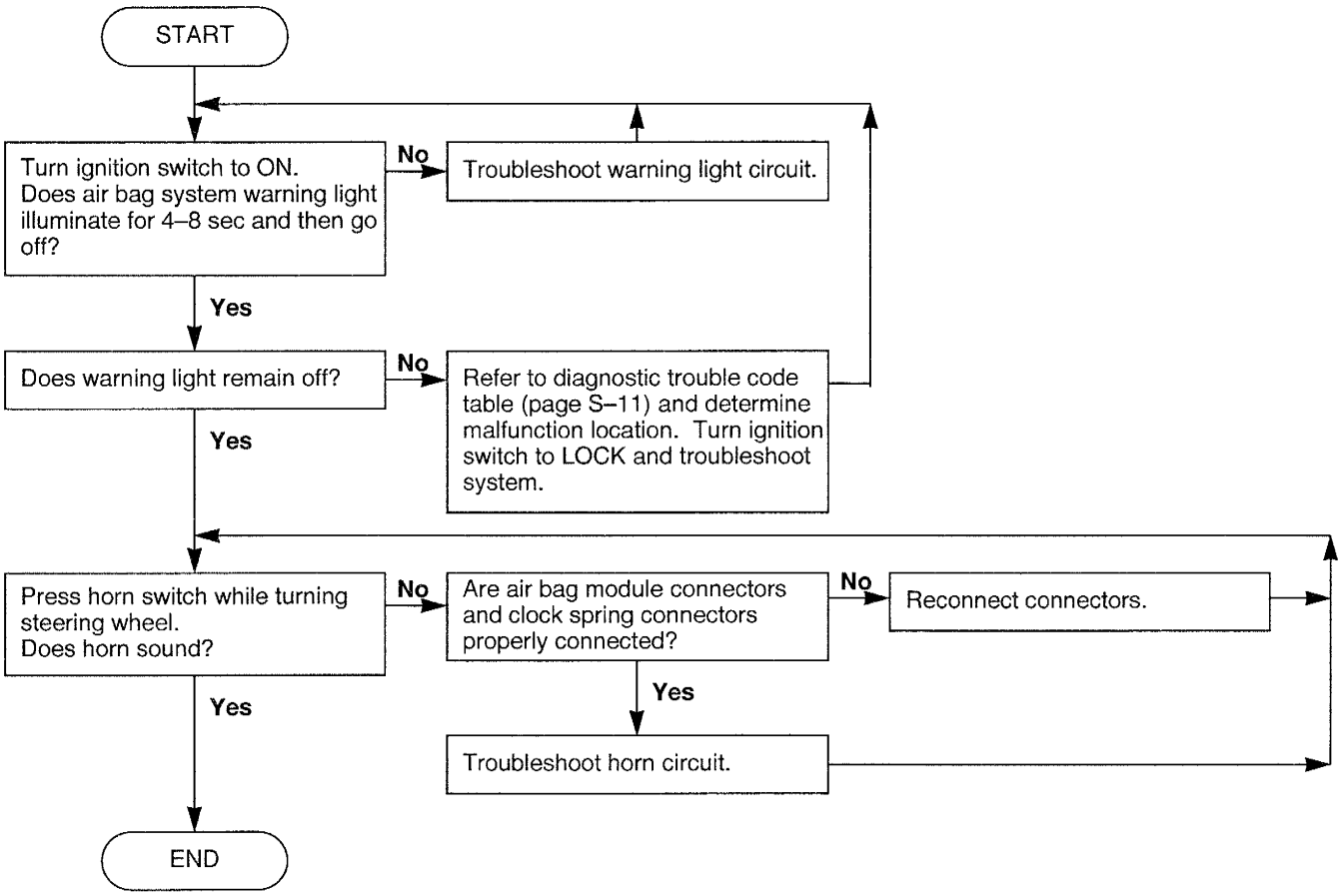

S ■ AIR BAG SYSTEM

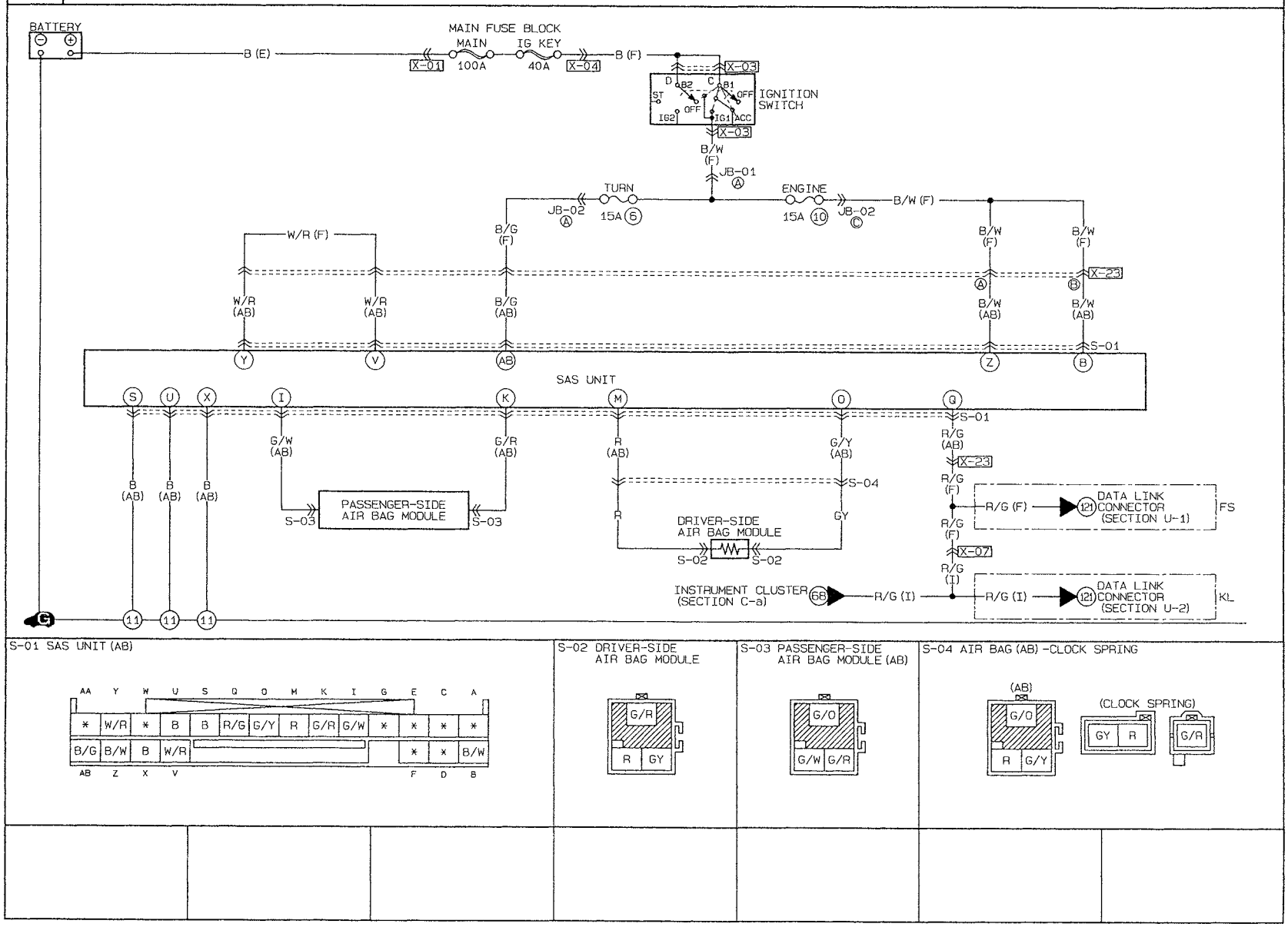

Connector Locations

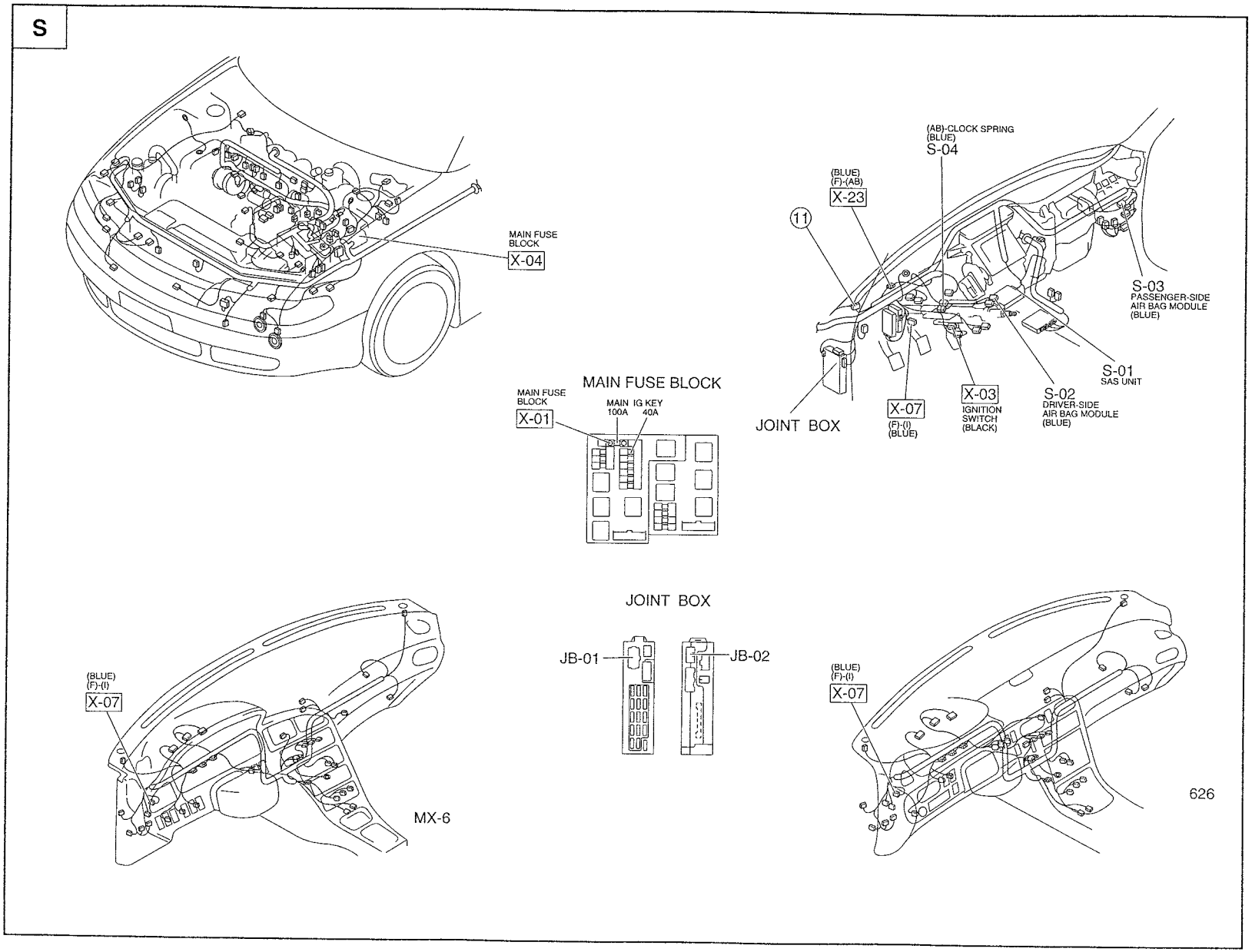

Diagnostic Trouble Code Table

If there are two or more problems in the air bag system, the warning light indicates the problem with the highest priority.

Priority	Code No.	Warning light indication	Malfunction location	Inspection area	Refer to page
1	0	Remains on	SAS-uint	SAS-unit connector	S–12
2	3		Battery	• Battery positive voltage • Wiring harness (Battery—ENGINE 15A fuse—SAS-unit, Battery—TURN 15A fuse—SAS-unit)	S–13
3	6		Driver-side air bag module	• Clock spring • Wiring harness (Clock spring—SAS-unit)	S–14
4	7		Passenger-side air bag module	Wiring harness (Passenger-side air bag module—SAS-unit)	S–16

Flowchart No.1	Symptom	Air bag system warning light remains on

Possible cause
- Damaged SAS-unit
- Open or short circuit in wiring harness
- Poor connection of connector

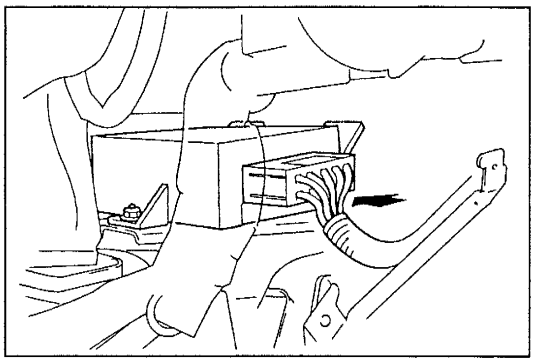

Remedy

Warning
- **Handling the SAS-unit improperly can accidently deploy the air bags, which may seriously injure you. Read SERVICE WARNINGS, page S–6, before handling the SAS-unit.**

1. Carry out the "Before Servicing" procedure under GENERAL PROCEDURES, page S–7.
2. Check the SAS-unit connection.

Connection	Action
OK	Replace SAS-unit (Refer to page S–22)
Poor	Reconnect connector

Flowchart No.2	Symptom	Diagnostic trouble code 3

Possible cause
- Weak battery
- Open or short circuit in wiring harness
- Poor connection of connector

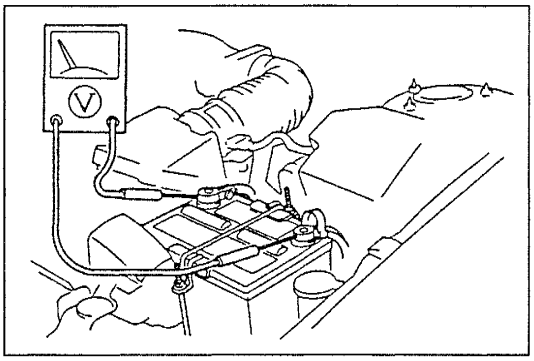

Step 1
Measure the battery voltage.

Voltage	Action
More than 8V	Got to Step 2
Less than 8V	Battery is weak Check charge/discharge system (Refer to 1996 626/MX-6 Workshop Manual, section G)

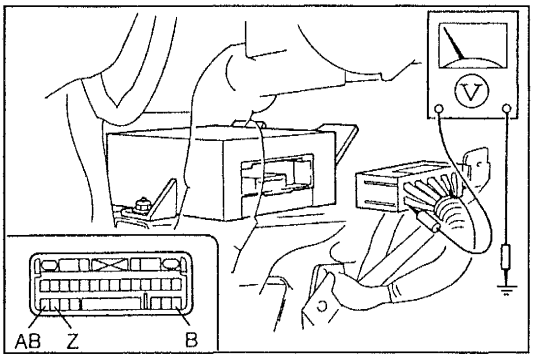

Step 2

Warning
- **Handling the SAS-unit improperly can accidently deploy the air bags, which may seriously injure you. Read SERVICE WARNINGS, page S–6, before handling the SAS-unit.**

1. Carry out the "Before Servicing" procedure under GENERAL PROCEDURES, page S–7.
2. Disconnect the SAS-unit connector.
3. Connect the negative battery cable.
4. Turn the ignition switch to ON.
5. Measure the voltage at the terminals of the SAS-unit connector.

Terminal	Voltage	Action
B (B/W) Z (B/W)	More than 8V	Measure voltage at terminal AB
	Less than 8V	Repair wiring harness (Battery—ENGINE 15A fuse—SAS-unit)
AB (B/G)	More than 8V	Replace SAS-unit (Refer to page S-22)
	Less than 8V	Repair wiring harness (Battery—TURN 15A fuse—SAS-unit)

Flowchart No.3	Symptom	Diagnostic trouble code 6

Possible cause
- Damaged driver-side air bag module
- Damaged clock spring
- Damaged SAS-unit
- Open or short circuit in wiring harness
- Poor connection of connector

Warning
- **Handling the air bag module and SAS-unit improperly can accidently deploy the air bag, which may seriously injure you. Read SERVICE WARNINGS, page S–6, before handling the air bag module and SAS-unit.**

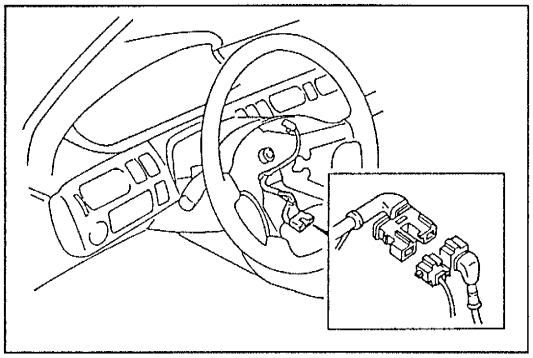

Step 1
1. Carry out the "Before Servicing" procedure under GENERAL PROCEDURES, page S–7.
2. Remove the driver-side air bag module. (Refer to page S–18.)
3. Verify that the driver-side air bag module connector pin is not broken.

Pin	Action
OK	Go to Step 2
Broken	Replace clock spring (Refer to section Z4)

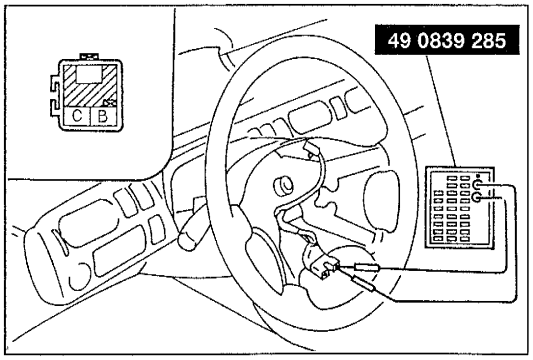

Step 2
1. Connect the leads of the **SST** to terminals B and C of the driver-side air bag module connector.
2. Set the resistance of the **SST** to 2 ohms.
3. Connect the clock spring connector.
4. Connect the negative battery cable.
5. Turn the ignition switch to ON and verify that diagnostic trouble code.

Diagnostic trouble code	Action
6	Go to Step 3
Other	Replace driver-side air bag module (Refer to page S–18)

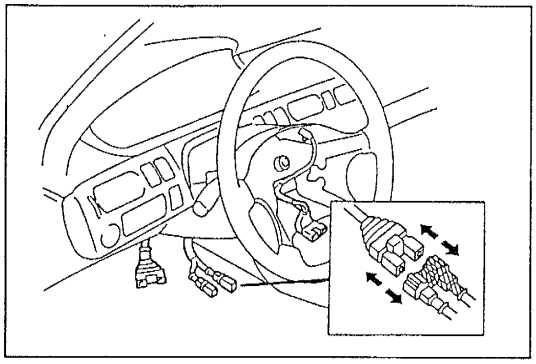

Step 3

1. Turn the ignition switch to LOCK.
2. Disconnect the negative battery cable and wait for more than one minute to allow the backup power supply to deplete its stored power.
3. Disconnect the clock spring connector.
4. Verify that the clock spring connector pin is not broken.

Pin	Action
OK	Go to Step 4
Broken	Repair wiring harness (Clock spring—SAS-unit)

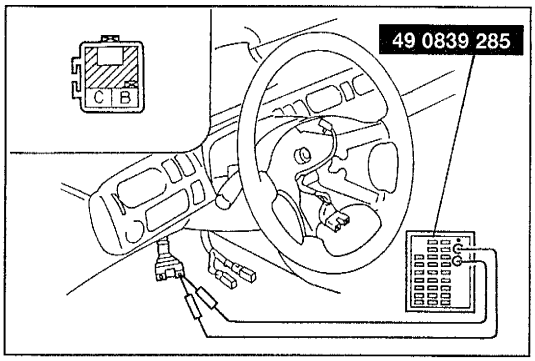

Step 4

1. Connect the leads of the **SST** to terminals B and C of the clock spring connector.
2. Set the resistance of the **SST** to 2 ohms.
3. Connect the negative battery cable.
4. Turn the ignition switch to ON and verify that diagnostic trouble code.

Diagnostic trouble code	Action
6	Go to Step 5
Other	Replace clock spring (Refer to section Z4)

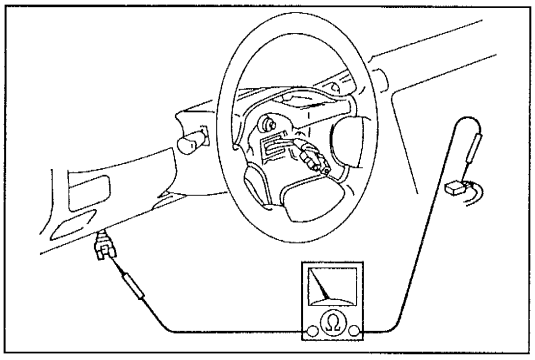

Step 5

1. Turn the ignition switch to LOCK.
2. Disconnect the negative battery cable and wait for more than one minute to allow the backup power supply to deplete its stored power.
3. Disconnect the SAS-unit connector.
4. Check the wiring harness between the terminals of the SAS-unit connector and the clock spring connector for the following.
   - Ground short circuit
   - Line short circuit
   - Open circuit
5. If the wiring harness is normal, replace the SAS-unit. (Refer to page S–22.)
6. If the wiring harness is faulty, repair it. (Clock spring—SAS-unit)

Flowchart No.4	Symptom	Diagnostic trouble code 7

Possible cause
- Damaged passenger-side air bag module
- Damaged SAS-unit
- Open or short circuit in wiring harness
- Poor connection of connector

Warning
- **Handling the air bag module and SAS-unit improperly can accidently deploy the air bag, which may seriously injure you. Read SERVICE WARNINGS, page S–6, before handling the air bag module and SAS-unit.**

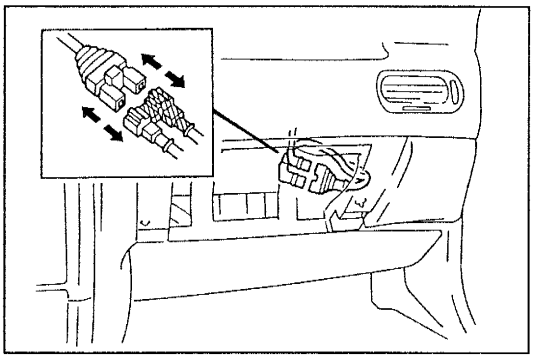

Step 1
1. Carry out the "Before Servicing" procedure under GENERAL PROCEDURES, page S–7.
2. Verify that the passenger-side air bag module connector pin is not broken.

Pin	Action
OK	Go to Step 2
Broken	Repair wiring harness (Passenger-side air bag module—SAS-unit)

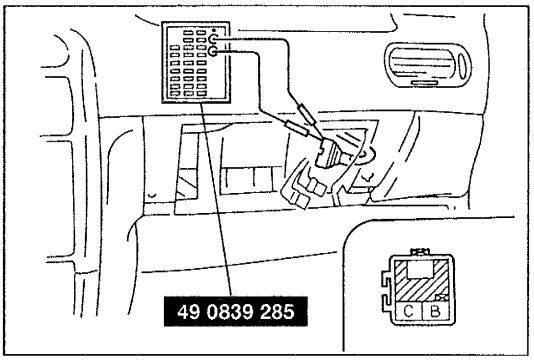

Step 2
1. Connect the leads of the **SST** to terminals B and C of the passenger-side air bag module connector.
2. Set the resistance of the **SST** to 2 ohms.
3. Connect the clock spring connector.
4. Connect the negative battery cable.
5. Turn the ignition switch to ON and verify that diagnostic trouble code.

Diagnostic trouble code	Action
7	Go to Step 3
Other	Replace passenger-side air bag module (Refer to page S–20)

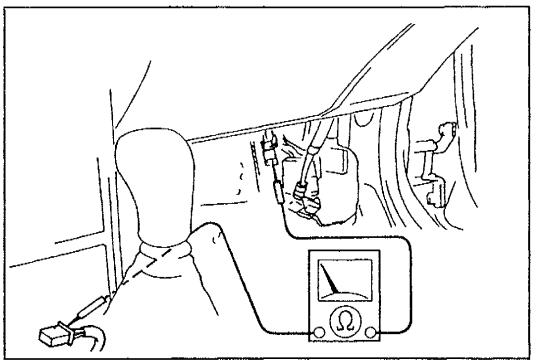

Step 3

1. Turn the ignition switch to LOCK.
2. Disconnect the negative battery cable and wait for more than one minute to allow the backup power supply to deplete its stored power.
3. Disconnect the clock spring connector.
4. Disconnect the SAS-unit connector.
5. Check the wiring harness between the terminals of the SAS-unit connector and the passenger-side air bag connector for the following.
   - Ground short circuit
   - Line short circuit
   - Open circuit
6. If the wiring harness is normal, replace the SAS-unit. (Refer to page S–22.)
7. If the wiring harness is faulty, repair it. (Passenger-side air bag module—SAS-unit)

DRIVER-SIDE AIR BAG MODULE
Removal / Installation

Warning
- **Handling the air bag module improperly can accidently deploy the air bag, which may seriously injure you. Read SERVICE WARNINGS, page S–6, before handling the air bag module.**

Warning
- **Installing the driver-side air bag module when a service code 6 is not indicated can accidently deploy the air bag, which can cause serious injury. Carry out the proper troubleshooting procedures and verify that service code 6 is indicated before installing the driver-side air bag module.**

1. Carry out the "Before Servicing" procedure under GENERAL PROCEDURES, page S–7.
2. Remove in the order shown in the figure.
3. Install in the reverse order of removal, referring to **Installation note.**
4. Follow the troubleshooting flowchart (page S–8) to verify that the air bag system is operating normally.

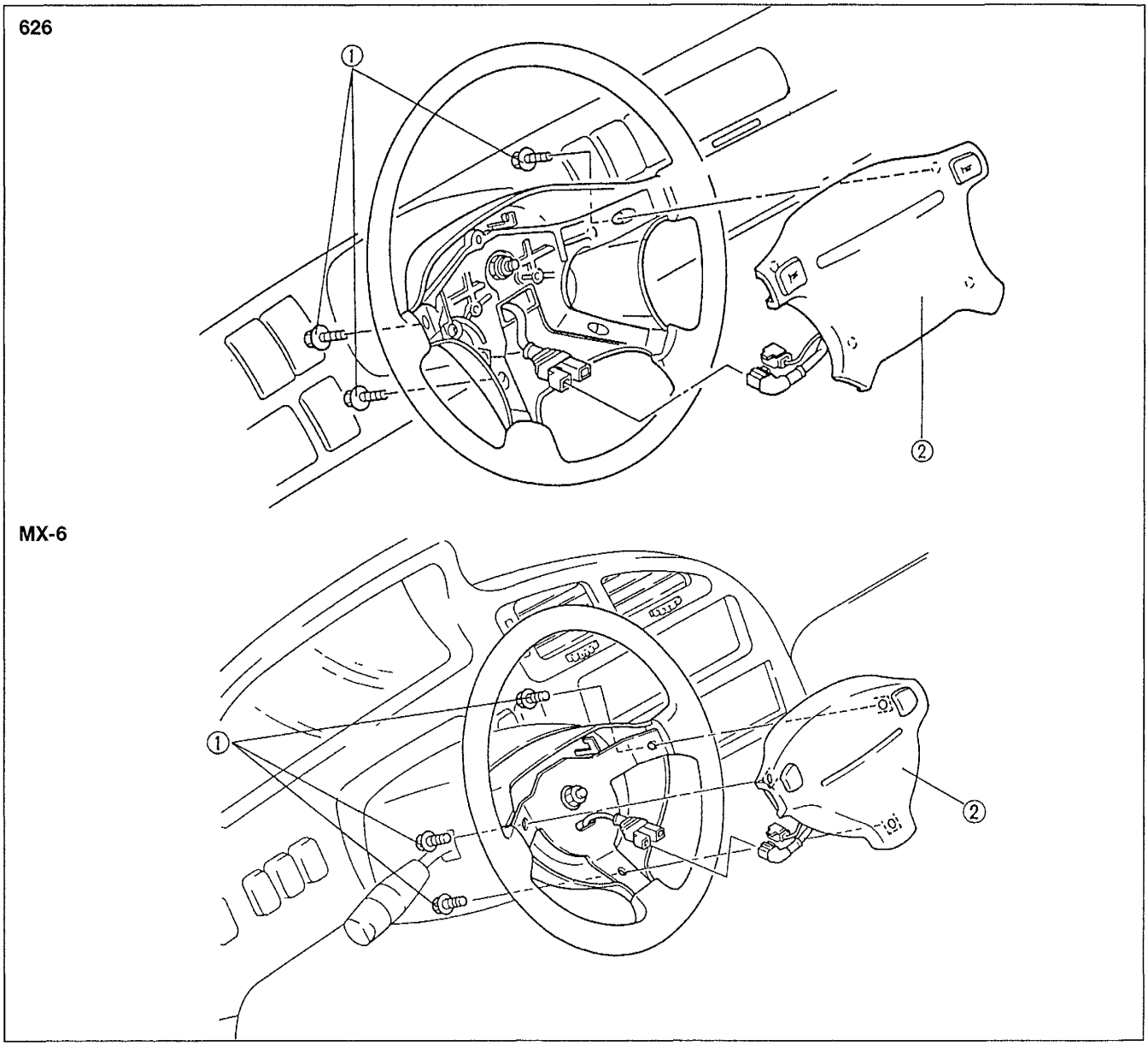

1. Bolts
   Installation note .....page S–19
2. Driver-side air bag module

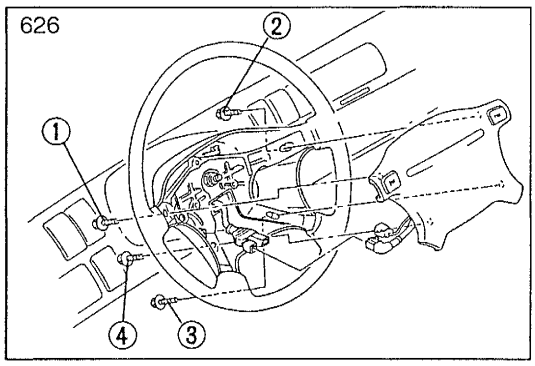

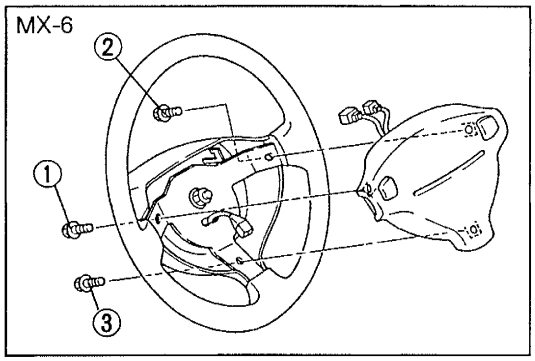

Installation note
Bolts
Tighten the bolts in the order shown in the figure.

Tightening torque:
7.9—11.7 N·m {80—120 kgf·cm, 70—104 in·lbf}

PASSENGER-SIDE AIR BAG MODULE
Removal / Installation

Warning
- **Handling the air bag module improperly can accidently deploy the air bag, which may seriously injure you. Read SERVICE WARNINGS, page S–6, before handling the air bag module.**

Warning
- **Installing the passenger-side air bag module when a service code 7 is not indicated can accidently deploy the air bag, which can cause serious injury. Carry out the proper troubleshooting procedures and verify that service code 7 is indicated before installing the passenger-side air bag module.**

1. Carry out the "Before Servicing" procedure under GENERAL PROCEDURES, page S–7.
2. Remove in the order shown in the figure.
3. Install in the reverse order of removal.
4. Follow the troubleshooting flowchart (page S–8) to verify that the air bag system is operating normally.

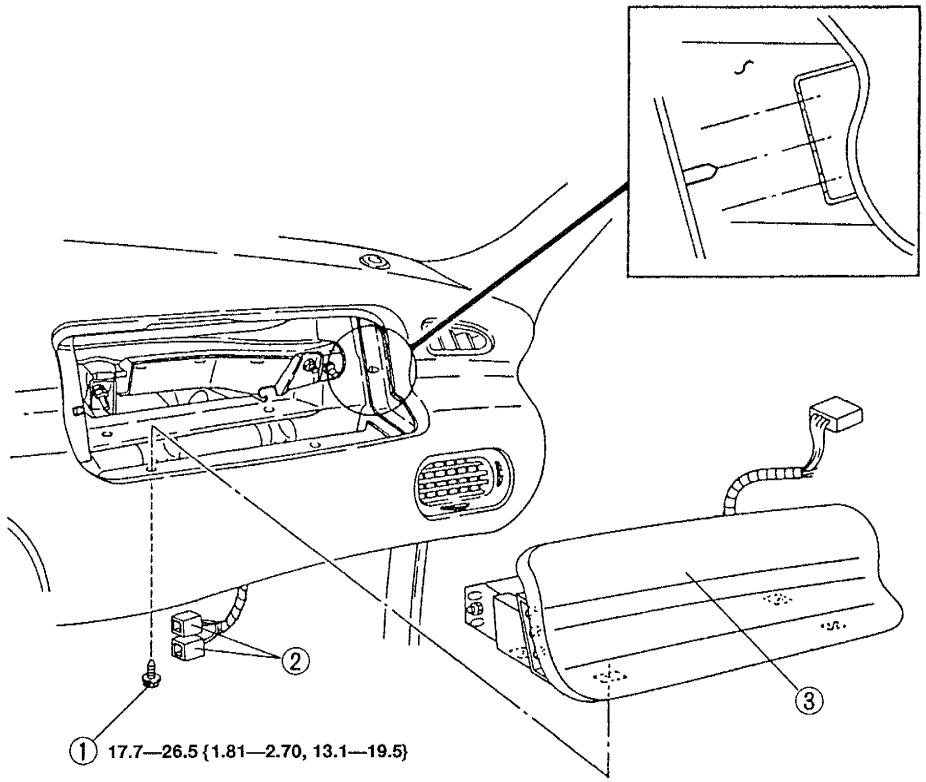

N·m {kgf·m, ft·lbf}

1. Bolt
2. Connectors
3. Passenger-side air bag module

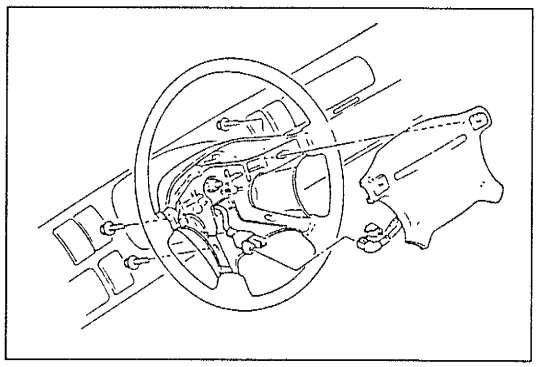

CLOCK SPRING
Inspection

Warning
- **Handling the air bag module improperly can accidently deploy the air bag, which may seriously injure you. Read SERVICE WARNINGS, page S–6, before handling the air bag module.**

1. Carry out the "Before Servicing" procedure under GENERAL PROCEDURES, page S–7.
2. Remove the driver-side air bag module. (Refer to page S–18.)

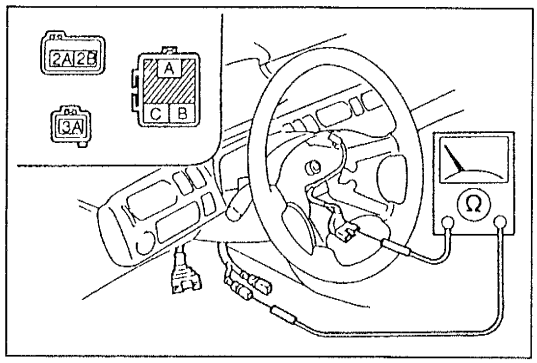

3. Check for continuity between the clock spring terminals.

O–O : Continuity

Terminal					
A	B	C	2A	2B	3A
O					O
	O	O	O	O	

4. If not as specified, replace the clock spring. (Refer to section Z4.)
5. Connect the blue and orange clock spring connectors.
6. Verify that pin B of the clock spring connector (harness-side) is not broken.
7. If pin B is broken, replace the air bag harness.
8. Verify that pin B of the driver-side air bag module connector (on clock spring) is not broken.
9. If pin B is broken, replace the clock spring.
10. Disconnect the diagnostic module connector.

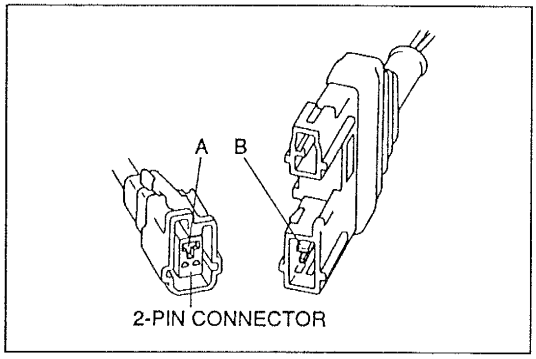

11. Connect the blue and orange clock spring connectors.

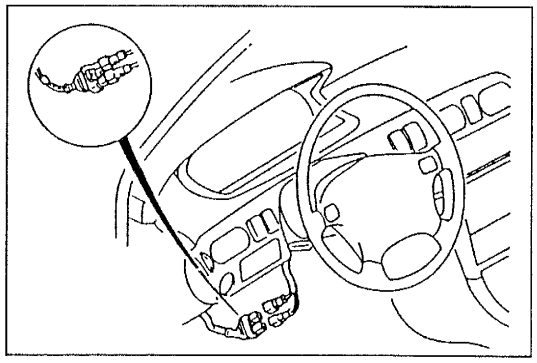

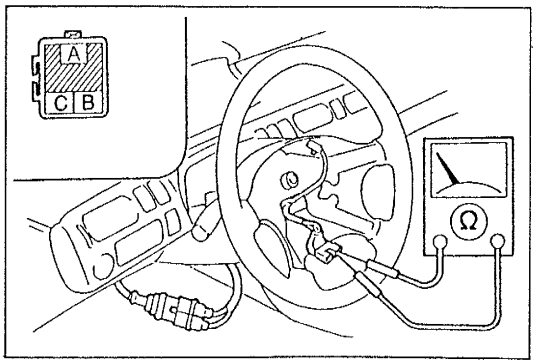

12. Check for continuity between terminals B and C of the clock spring.
13. If there is continuity, replace the clock spring. (Refer to section Z4.)

SAS-UNIT
Removal / Installation

1. Carry out the "Before Servicing" procedure under GENERAL PROCEDURES, page S–7.
2. Remove the heater unit.
   (Refer to section G.)
3. Remove in the order shown in the figure.
4. Install in the reverse order of removal, referring to **Installation note**.
5. Follow the troubleshooting flowchart (page S–8) to verify that the air bag system is operating normally.

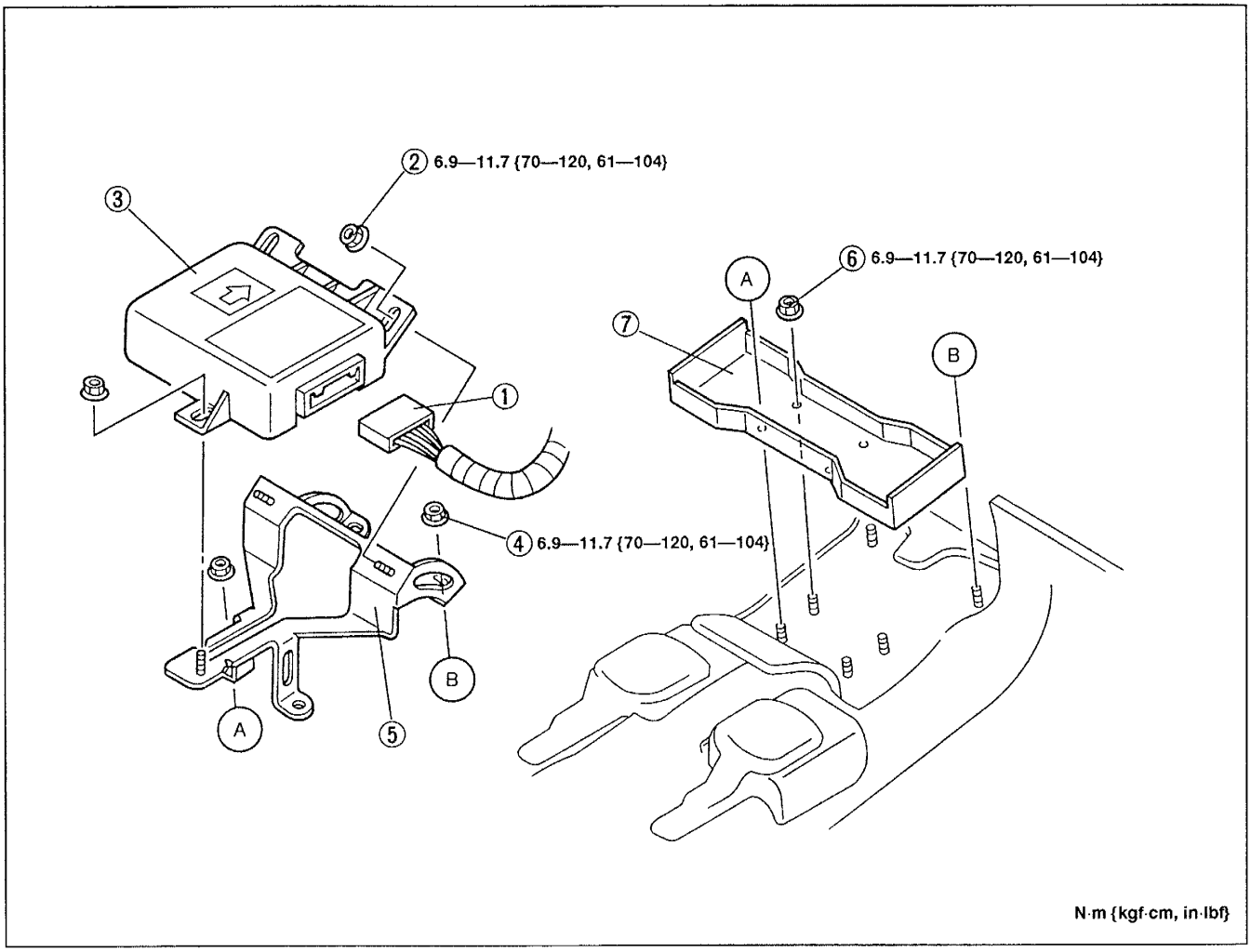

1. Connector
2. Nut
3. SAS-unit
   Installation note .....below
4. Nut
5. Bracket
   Installation note .....below
6. Nut
7. Bracket

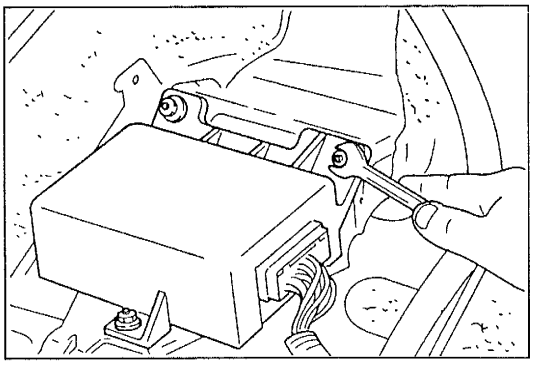

Installation note
SAS-unit and bracket

1. If the bracket mounting area is damaged, repair the area to its original shape.
2. Position the SAS-unit and bracket with the arrow on the SAS-unit facing toward the front of vehicle. Install them and tighten the nuts to the specified torque.

AIR BAG MODULE DISPOSAL PROCEDURE

Before scrapping a vehicle with an undeployed air bag module, deploy the air bag. Never dispose of a live air bag module. If the deployment tool **SST** is not available, consult the nearest Mazda representative for assistance.

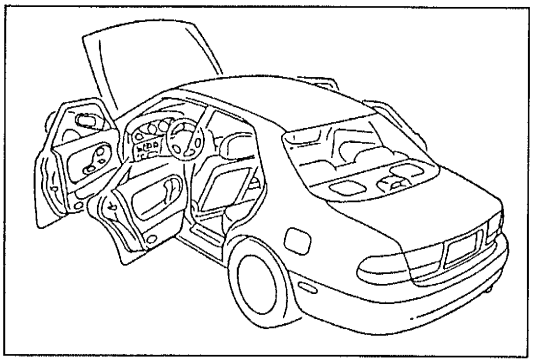

Air Bag Deployment

1. Move the vehicle to an open space, away from strong winds, and open all of the vehicle's doors.
2. Disconnect the negative battery cable and wait for more than one minute to allow the backup power supply to deplete its stored power.
3. Follow the appropriate procedure for the driver-side or passenger-side air bag module.

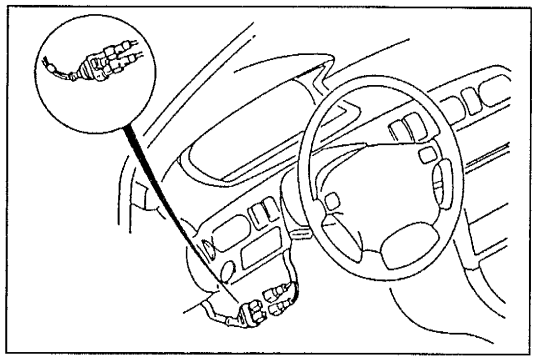

Driver-side air bag module

(1) Make sure the air bag module is firmly mounted to the steering wheel.
(2) Remove the driver-side undercover and lower panel.
(Refer to the 1996 626/MX-6 Workshop Manual, section S.)
(3) Disconnect the orange and blue clock spring connectors.

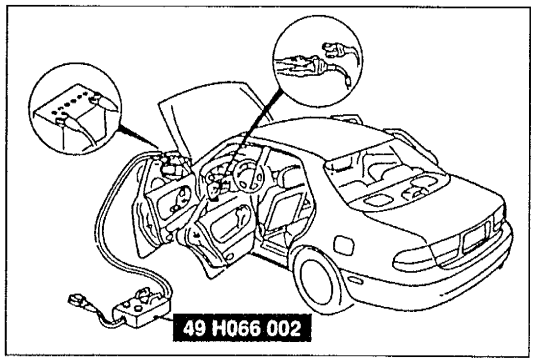

(4) Inspect the **SST**.
(Refer to page S–25.)
(5) Connect the **SST** to the clock spring connector as shown in the figure.

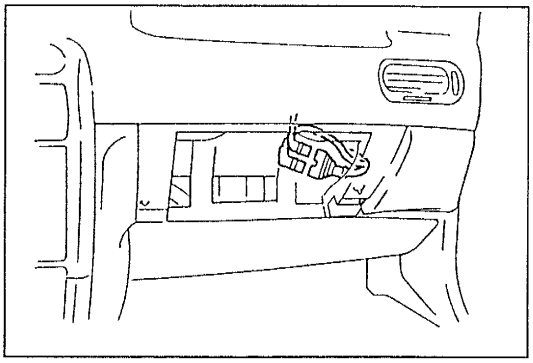

Passenger-side air bag module

(1) Remove the glove compartment.
(Refer to the 1996 626/MX-6 Workshop Manual, section S.)
(2) Disconnect the orange and blue passenger-side air bag module connector.

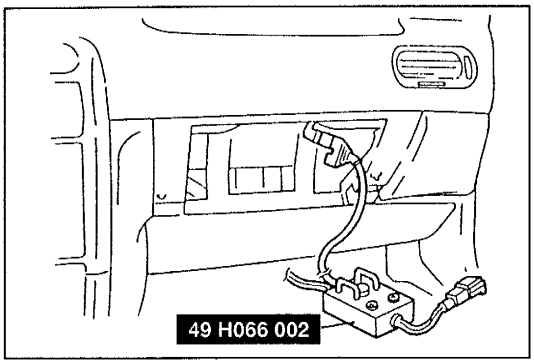

(3) Inspect the **SST**
(Refer to page S–25.)
(4) Connect the **SST** to the passenger-side air bag module.

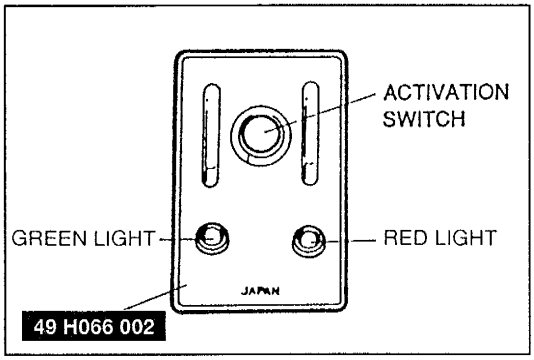

4. Connect the red clip of the **SST** to the positive battery terminal and the black clip to the negative terminal.
5. Verify that the red light on the **SST** is illuminated.
6. Make sure all persons are standing at least **6 m {20 ft}** from the vehicle.
7. Press the activation switch on the **SST** to deploy the air bag.

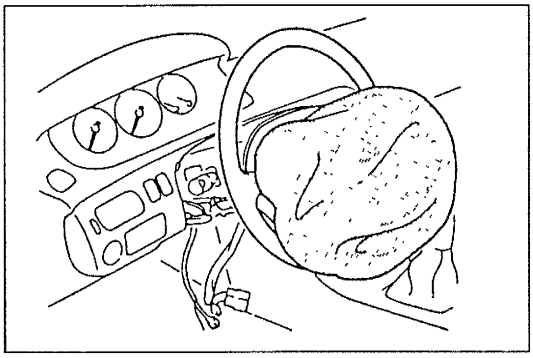

Air Bag Disposal

Warning
- **The air bag is very hot immediately after it deploys. You can be burned. Do not touch the air bag module for at least 15 minutes after deployment.**

Warning
- **Pouring water on a deployed air bag is dangerous. The water will mix with the residual gases to form a gas that can make breathing difficult if inhaled. Do not pour water on the deployed air bag module.**

Warning
- **A deployed air bag module may contain deposits of sodium hydroxide, a caustic by-product of the gas-generated combustion. If this substance gets in your eyes or on your hands, it can cause irritation and itching. When handling a deployed air bag module, wear gloves and safety glasses.**

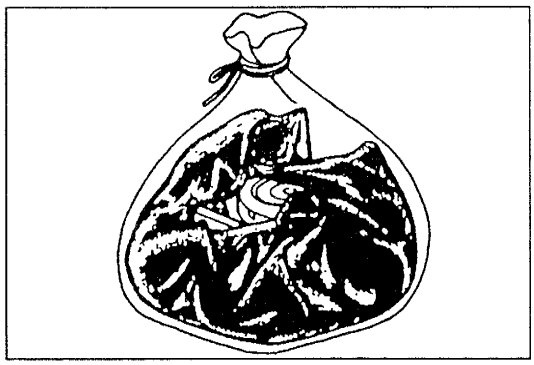

1. Put on gloves and safety glasses.
2. Place the deployed air bag module in a plastic bag, seal it, and then dispose of it.
3. Wash your hands after removing your gloves.

INSPECTION OF SST (DEPLOYMENT TOOL)

- Use the **SST** to deploy a live air bag module before disposing of it.
- Before connecting the **SST** to the clock spring connector or air bag module connector, inspect the operation of the **SST**.

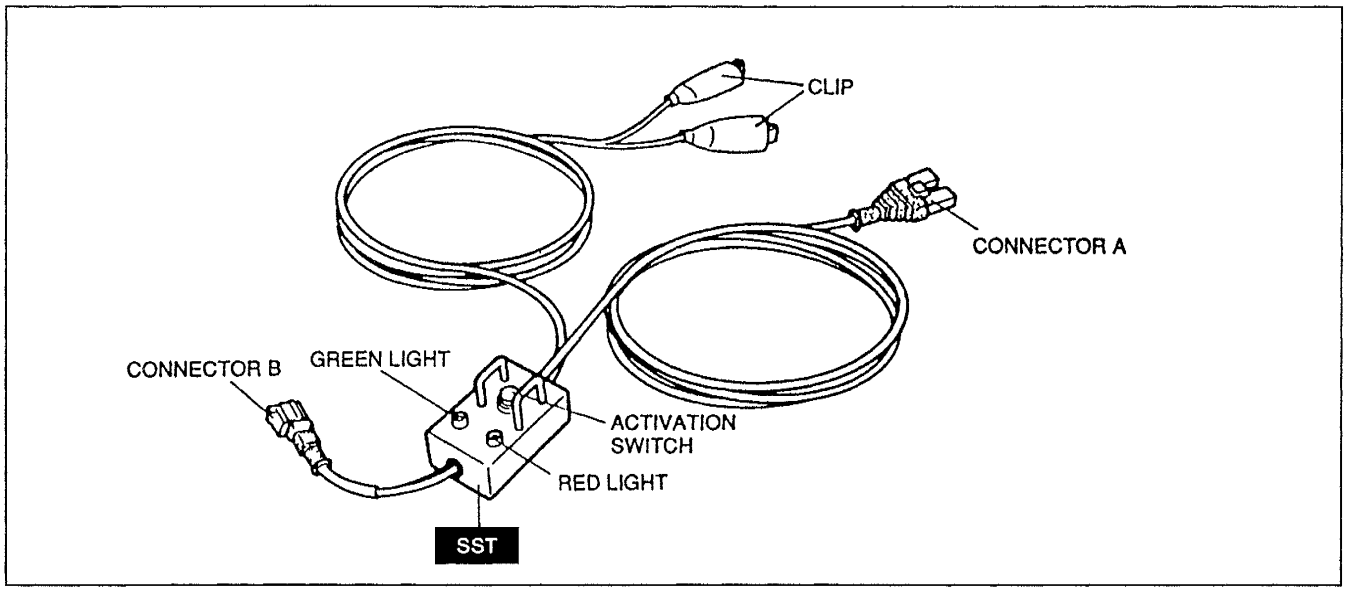

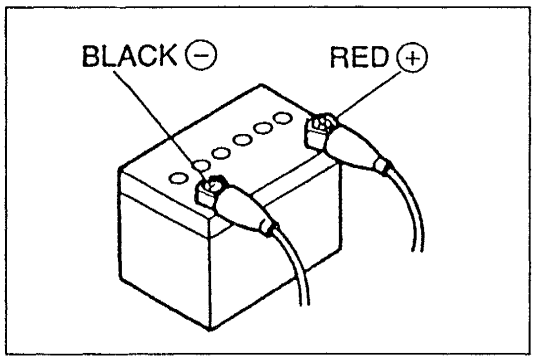

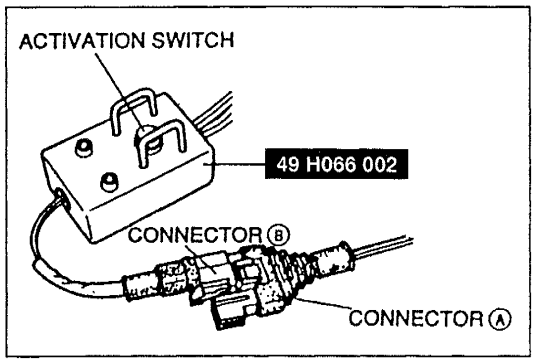

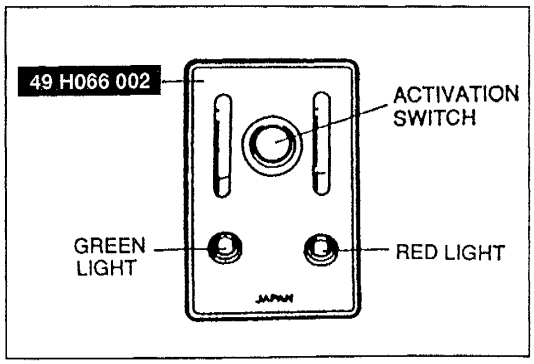

Inspection Procedure

1. Follow the steps below to inspect the operation of the **SST**.

Step	Inspection procedure	Light condition	
		Green	Red
1	Connect red clip to positive battery terminal and black clip to negative battery terminal.	ON	OFF
2	Connect connectors A and B of **SST.**	OFF	ON
3	Press activation switch.	ON	OFF

2. If not as specified, do not use the **SST** because it may cause the air bag to unexpectedly deploy upon connection to the harnesses.

Before beginning any service procedure, refer to section S of this manual for air bag system service warnings.

THEFT-DETERRENT SYSTEM

THEFT-DETERRENT SYSTEM

STRUCTURAL VIEW

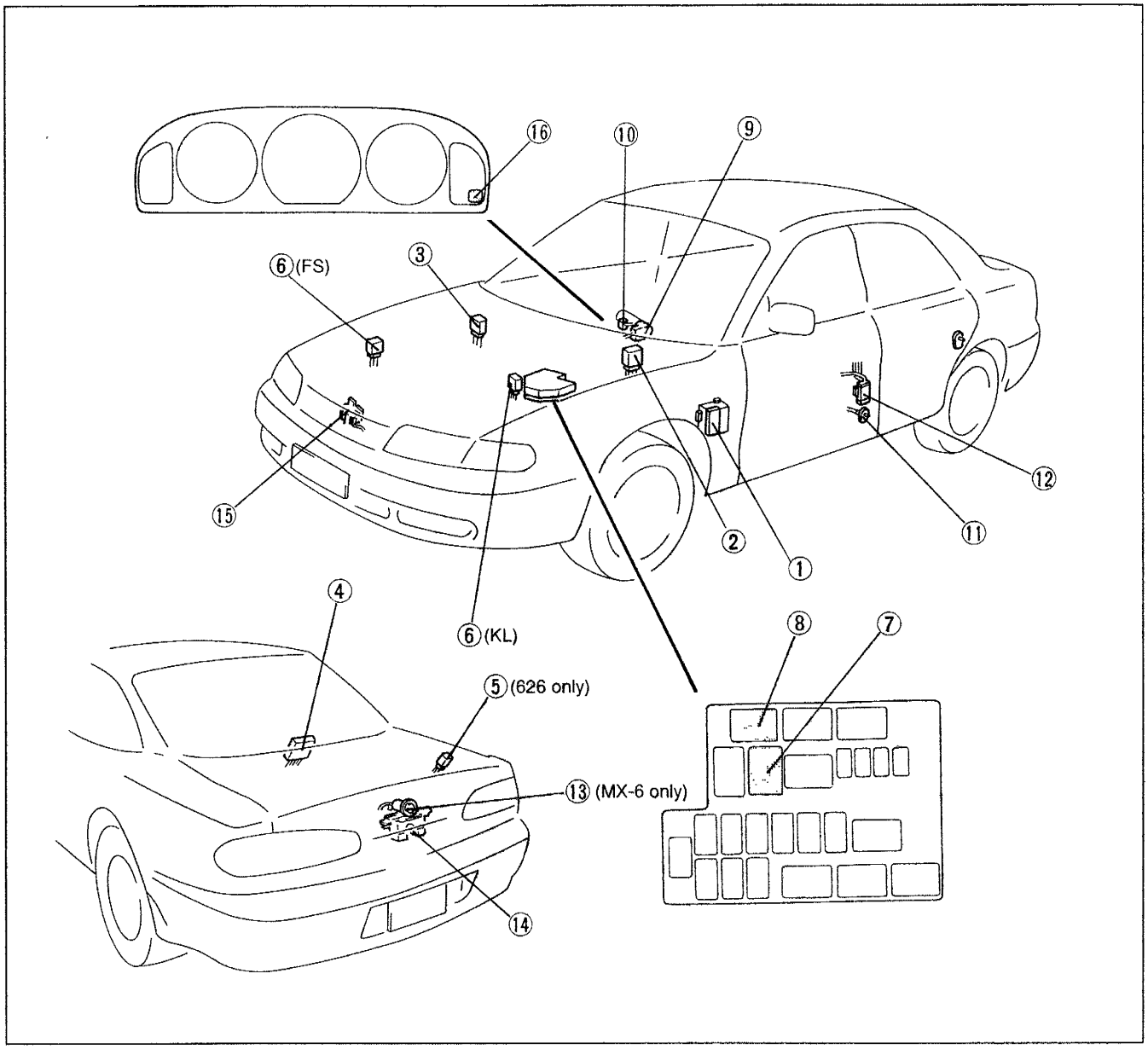

1. CPU
   Inspection ..... section Z3
2. Flasher unit
   Inspection ..... section F
3. Door lock timer unit
   Inspection ..... section K2
4. Keyless unit
   Terminal voltage list ..... section K3
5. Trunk lid opener relay
   Inspection ..... section K3
6. Headlight relay
   Inspection ..... section Z2
7. Horn relay
   Inspection ..... section Z2
8. Starter cut relay
   Inspection ..... page T3–12
9. Ignition switch
   Inspection ..... section Z4
10. Key reminder switch
    Inspection ..... section Z4
11. Door switch
    Inspection ..... section I2
12. Door lock-link switch
    Inspection ..... section K2
13. Trunk key cylinder switch
    Inspection ..... page T3–12
14. Trunk compartment light switch
    Inspection ..... section I2
15. Hood switch
    Inspection ..... page T3–12
16. Security light
    Bulb replacement ..... section C2

OUTLINE

- The theft-deterrent system is designed to prevent the vehicle or its contents from being stolen when the trunk lid and hood are closed and all of the doors are locked by the keyless entry system.
- If forcible entry is attempted, the system sounds the horn and flashes the headlights and hazard lights. It also makes the starter inoperable.
- When the transmitter UNLOCK or TRUNK button is pressed, the alarm stops, but with the MX-6, the alarms can be stopped when the ignition key is inserted into the trunk key cylinder and is turned to UNLOCK.

TROUBLESHOOTING

Outline

Follow the procedures shown below to troubleshoot the theft-deterrent system.

Flowchart

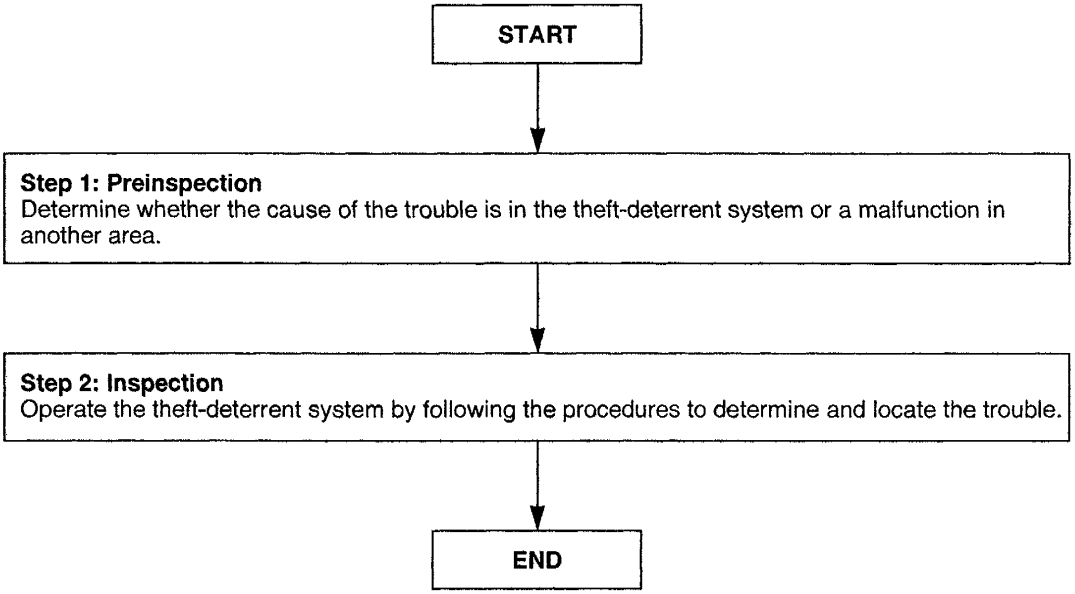

Wiring Diagram
Circuit diagram

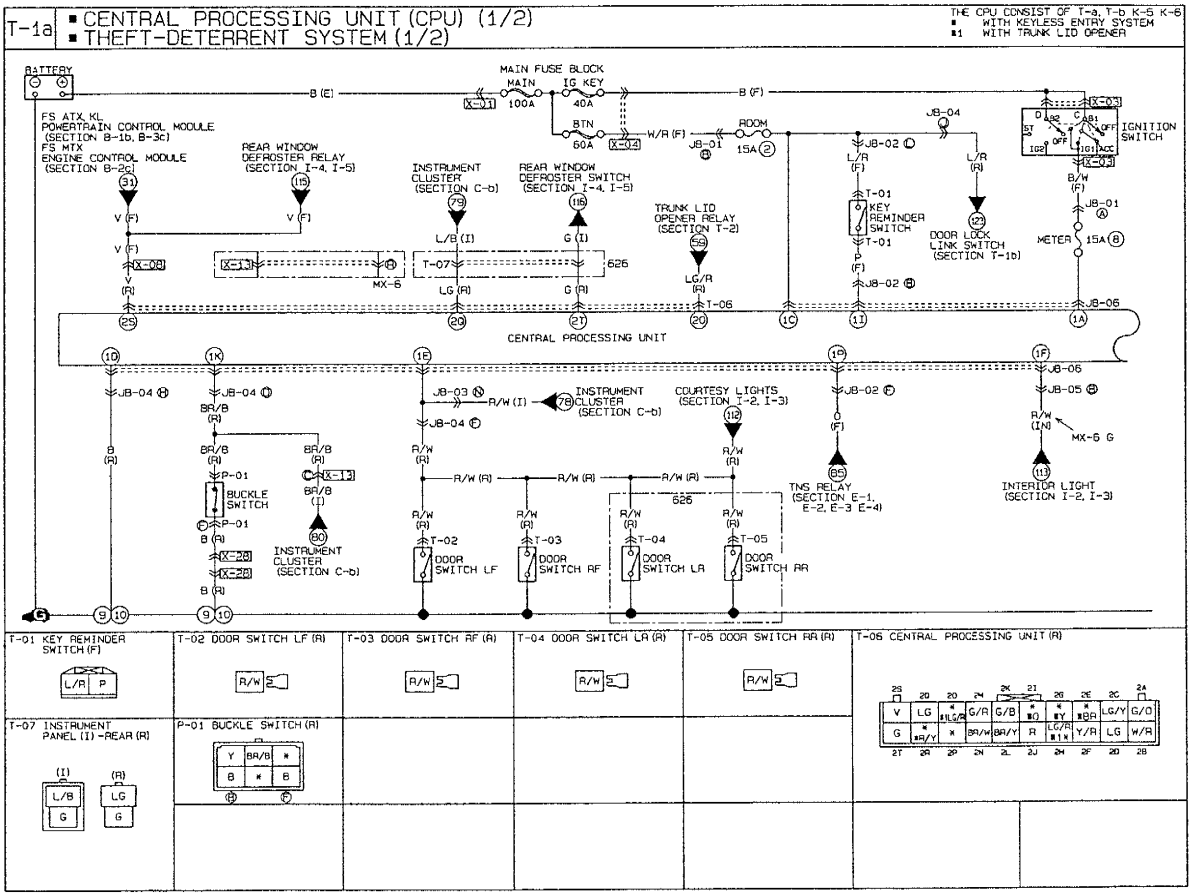

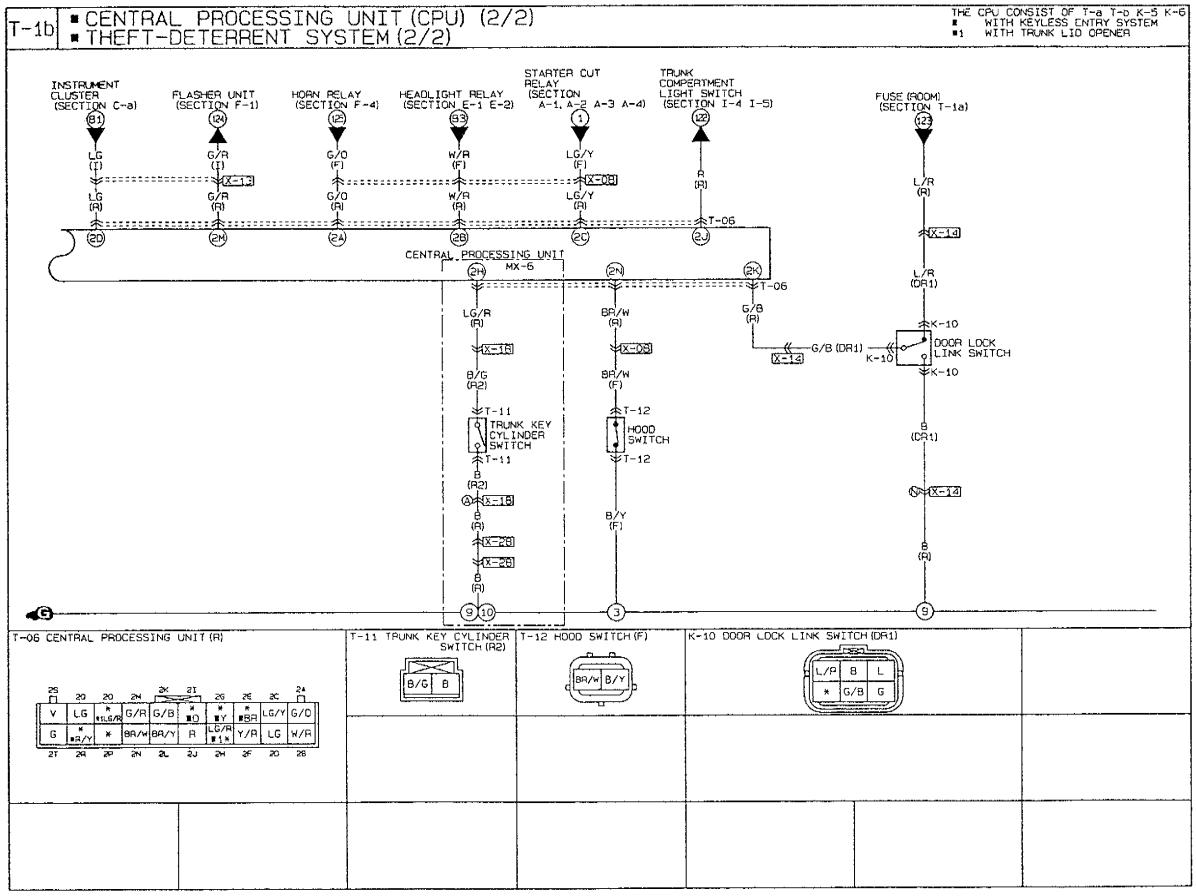

Connector locations

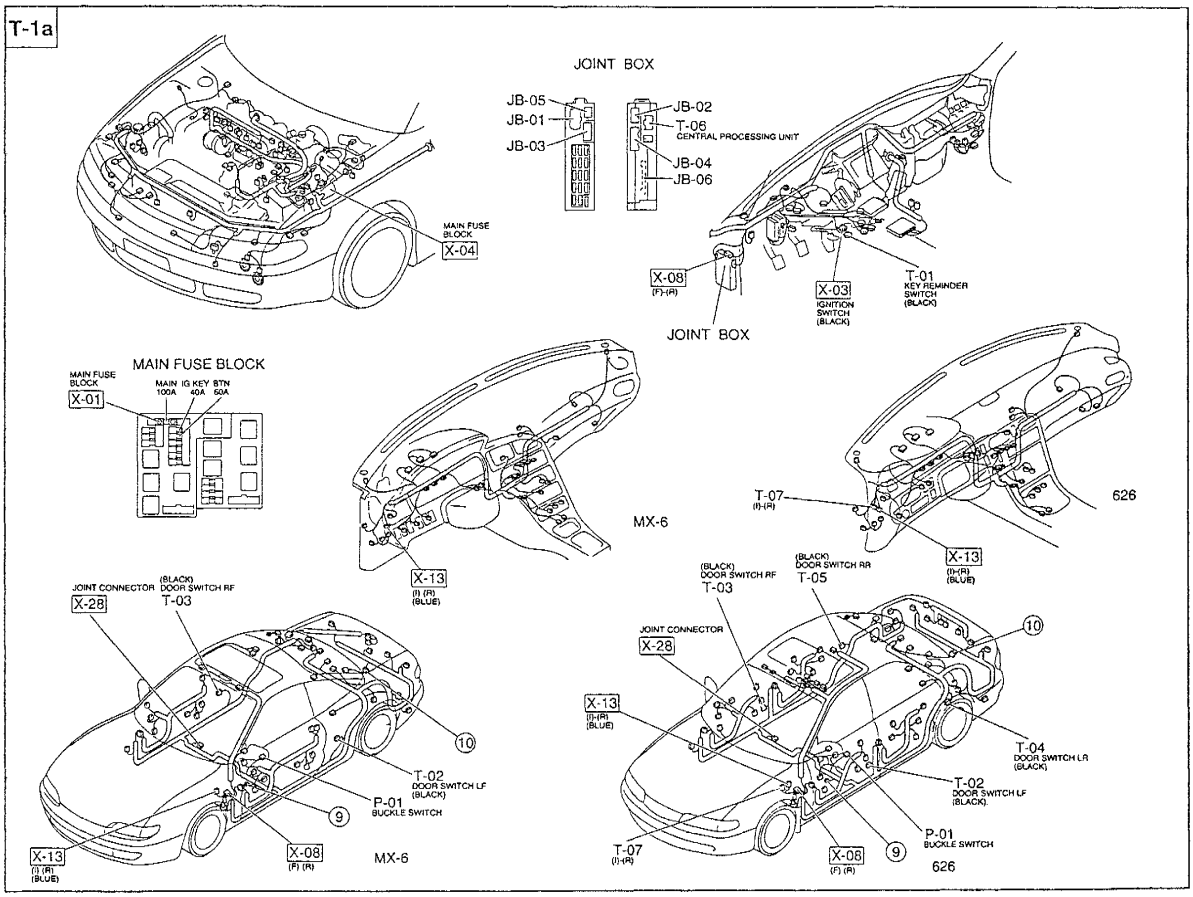

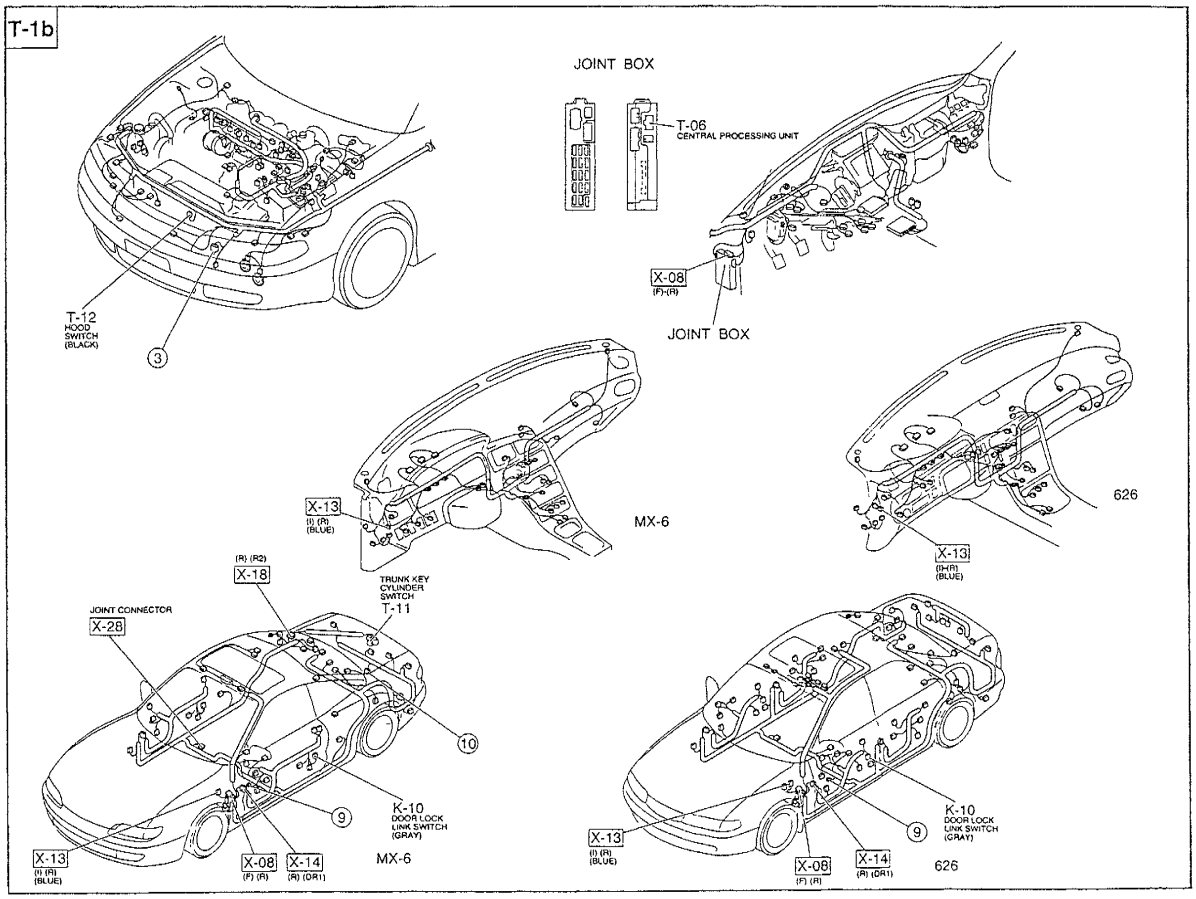

Preinspection

Follow the procedures shown below to determine whether or not the functions of the theft-deterrent system are operating normally.

Flowchart

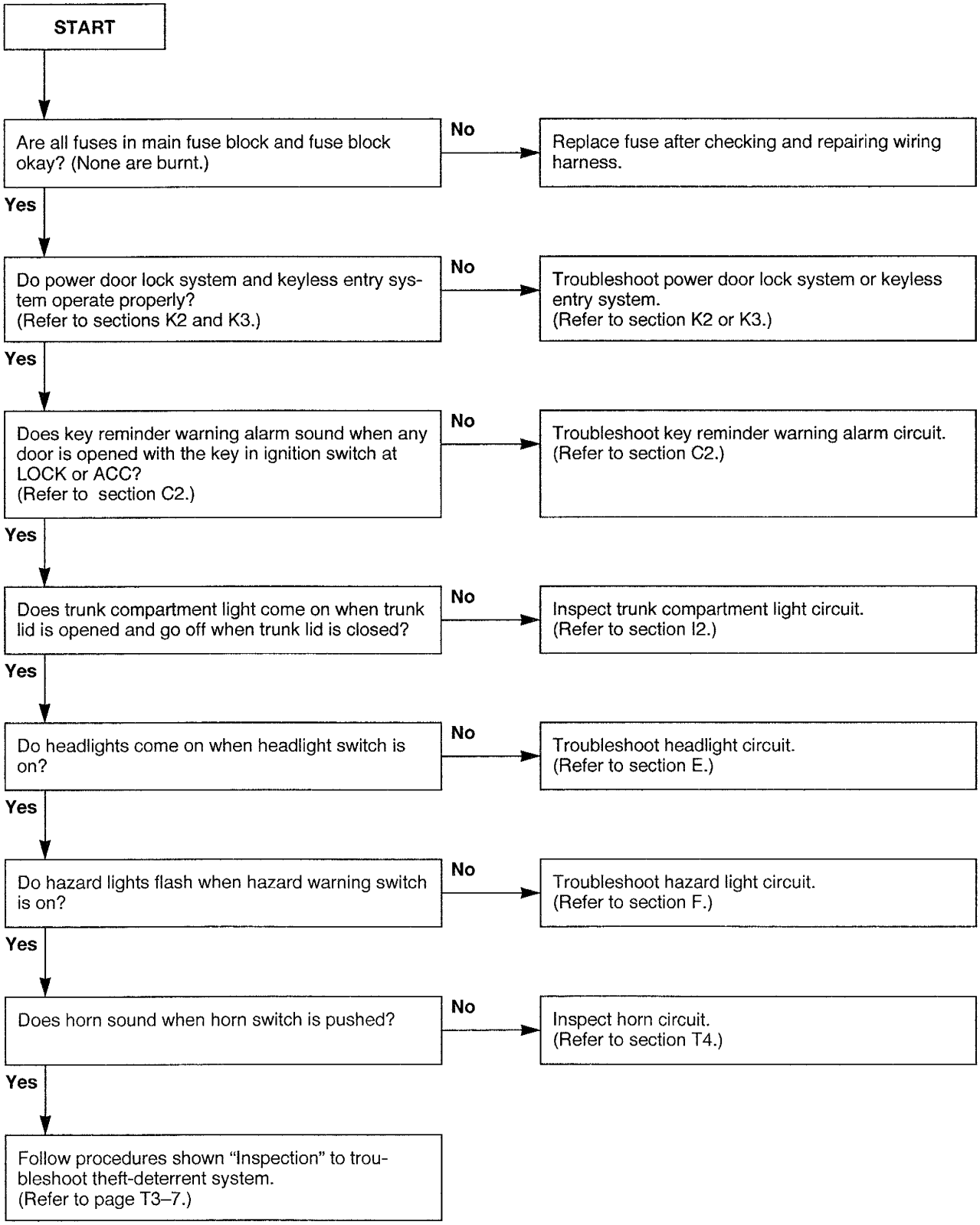

Inspection

Follow the procedures shown below to locate the trouble.

Inspection order

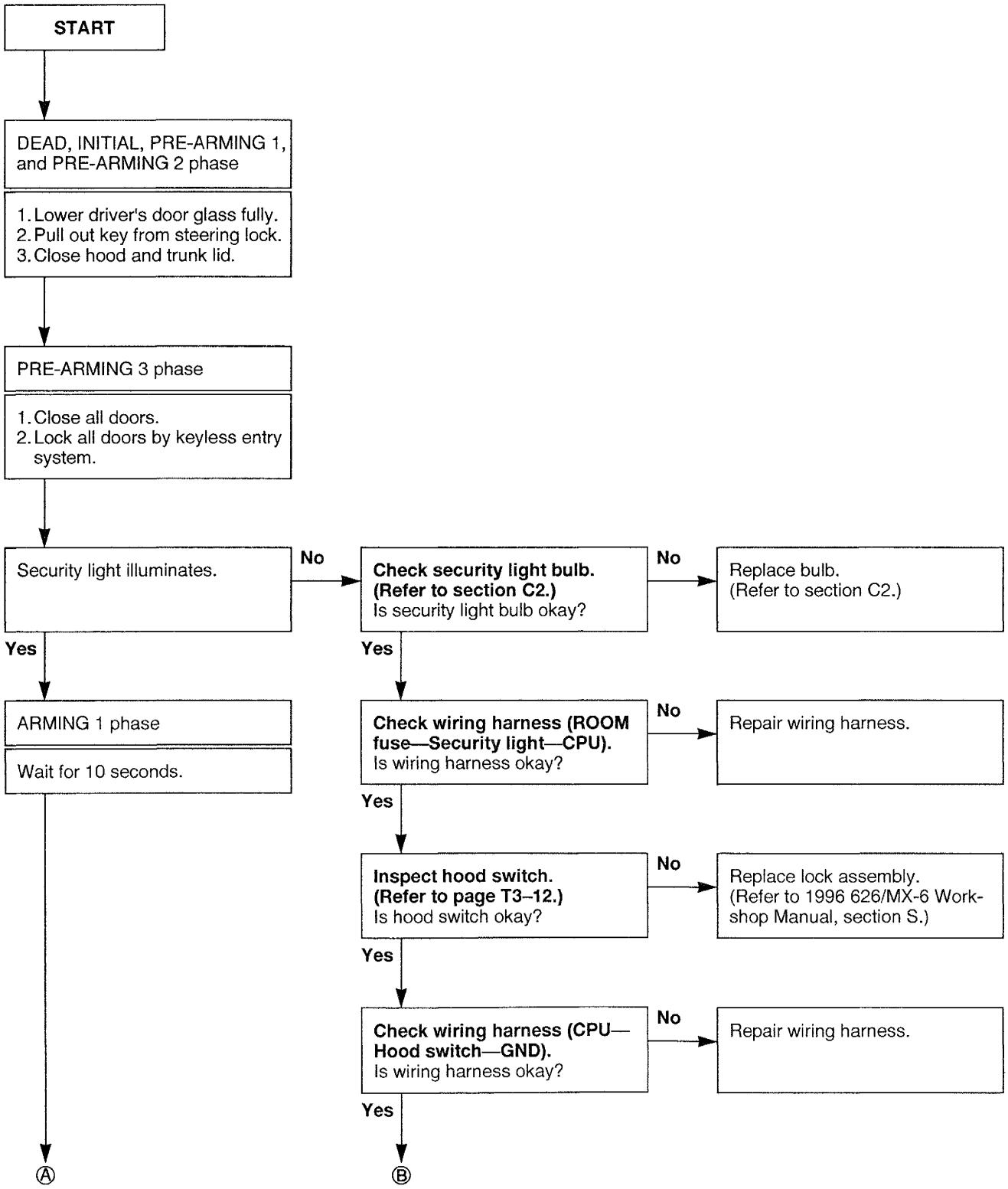

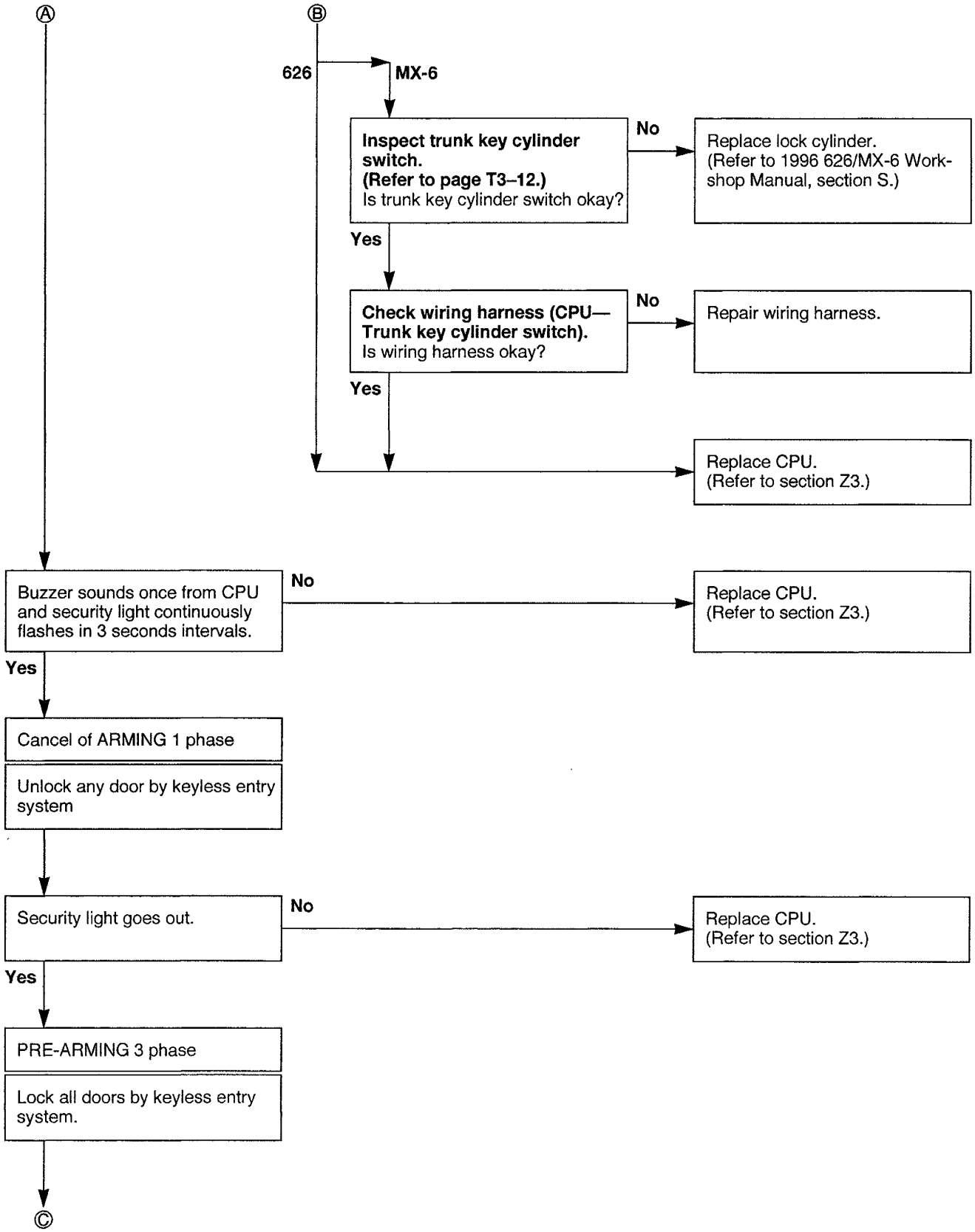
Ⓐ
Ⓑ
626
MX-6
Inspect trunk key cylinder switch. (Refer to page T3–12.) Is trunk key cylinder switch okay?
No
Replace lock cylinder. (Refer to 1996 626/MX-6 Workshop Manual, section S.)
Yes
Check wiring harness (CPU—Trunk key cylinder switch). Is wiring harness okay?
No
Repair wiring harness.
Yes
Replace CPU. (Refer to section Z3.)
Buzzer sounds once from CPU and security light continuously flashes in 3 seconds intervals.
No
Replace CPU. (Refer to section Z3.)
Yes
Cancel of ARMING 1 phase
Unlock any door by keyless entry system
Security light goes out.
No
Replace CPU. (Refer to section Z3.)
Yes
PRE-ARMING 3 phase
Lock all doors by keyless entry system.
Ⓒ

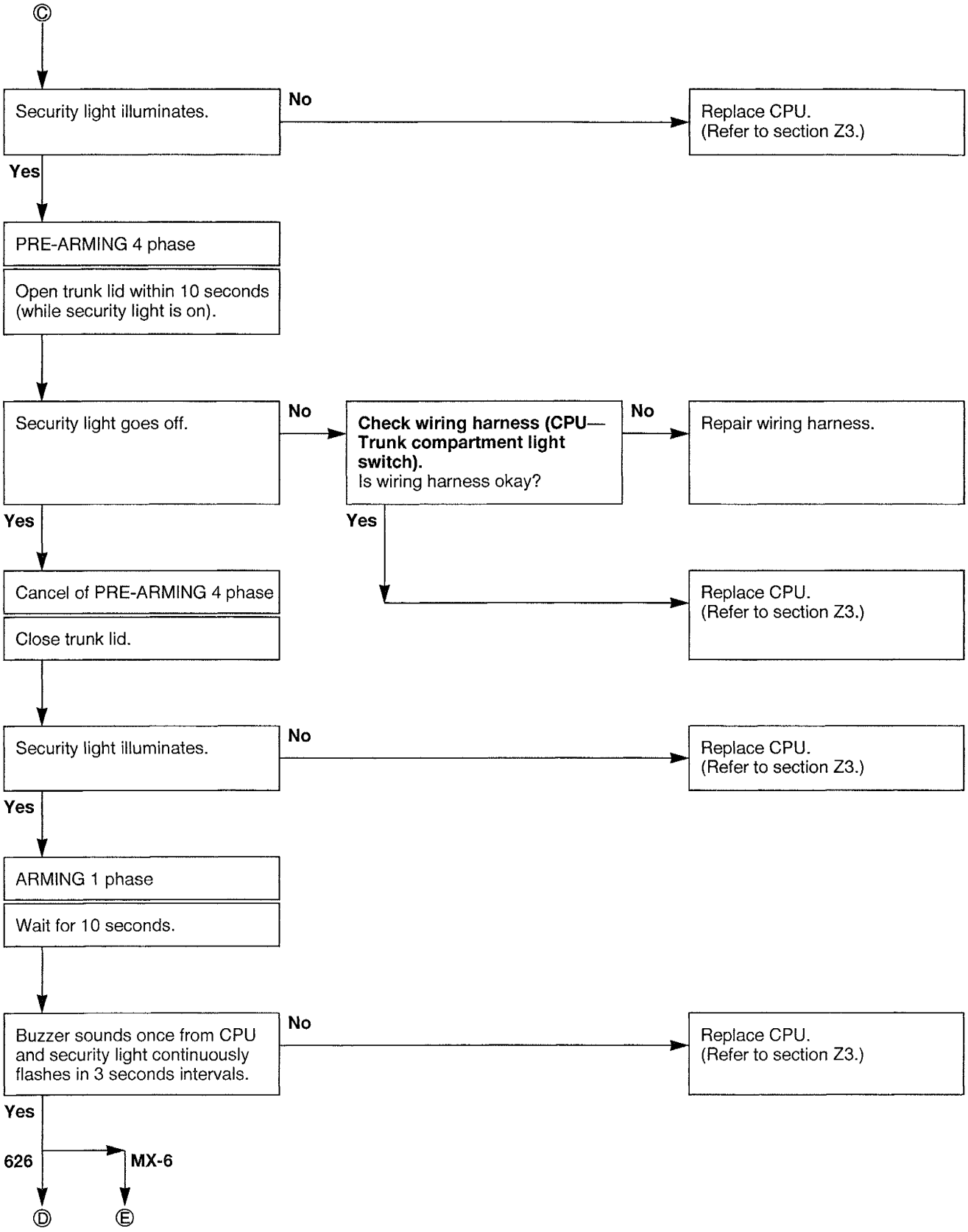
Ⓒ
Security light illuminates.
No
Replace CPU.
(Refer to section Z3.)
Yes
PRE-ARMING 4 phase
Open trunk lid within 10 seconds (while security light is on).
Security light goes off.
No
Check wiring harness (CPU—Trunk compartment light switch).
Is wiring harness okay?
No
Repair wiring harness.
Yes
Yes
Cancel of PRE-ARMING 4 phase
Close trunk lid.
Replace CPU.
(Refer to section Z3.)
Security light illuminates.
No
Replace CPU.
(Refer to section Z3.)
Yes
ARMING 1 phase
Wait for 10 seconds.
Buzzer sounds once from CPU and security light continuously flashes in 3 seconds intervals.
No
Replace CPU.
(Refer to section Z3.)
Yes
626
MX-6
Ⓓ
Ⓔ

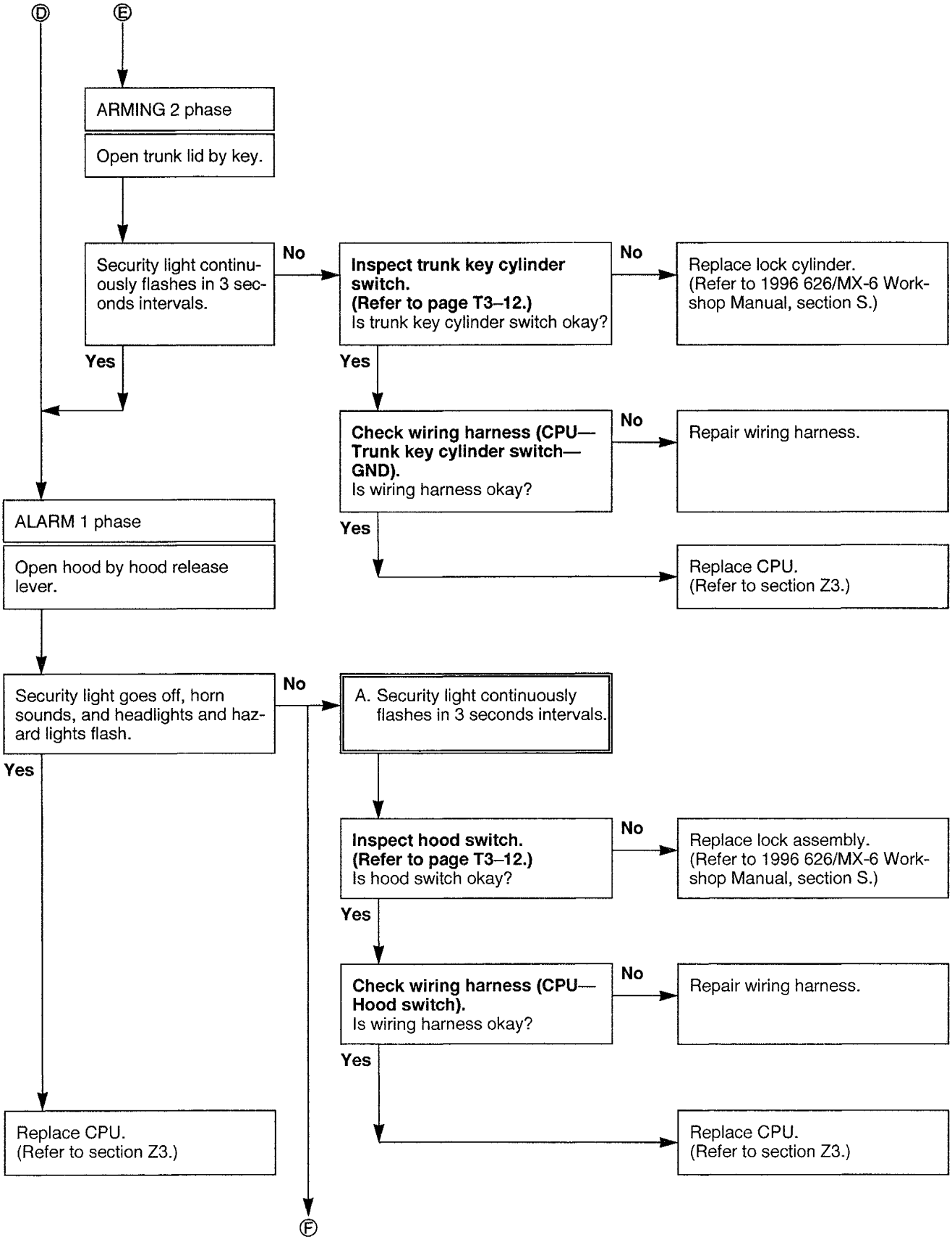
Ⓓ
Ⓔ
ARMING 2 phase
Open trunk lid by key.
Security light continuously flashes in 3 seconds intervals.
No
Inspect trunk key cylinder switch. (Refer to page T3–12.) Is trunk key cylinder switch okay?
No
Replace lock cylinder. (Refer to 1996 626/MX-6 Workshop Manual, section S.)
Yes
Yes
Check wiring harness (CPU—Trunk key cylinder switch—GND). Is wiring harness okay?
No
Repair wiring harness.
Yes
Replace CPU. (Refer to section Z3.)
ALARM 1 phase
Open hood by hood release lever.
Security light goes off, horn sounds, and headlights and hazard lights flash.
No
A. Security light continuously flashes in 3 seconds intervals.
Yes
Inspect hood switch. (Refer to page T3–12.) Is hood switch okay?
No
Replace lock assembly. (Refer to 1996 626/MX-6 Workshop Manual, section S.)
Yes
Check wiring harness (CPU—Hood switch). Is wiring harness okay?
No
Repair wiring harness.
Yes
Replace CPU. (Refer to section Z3.)
Replace CPU. (Refer to section Z3.)
Ⓕ

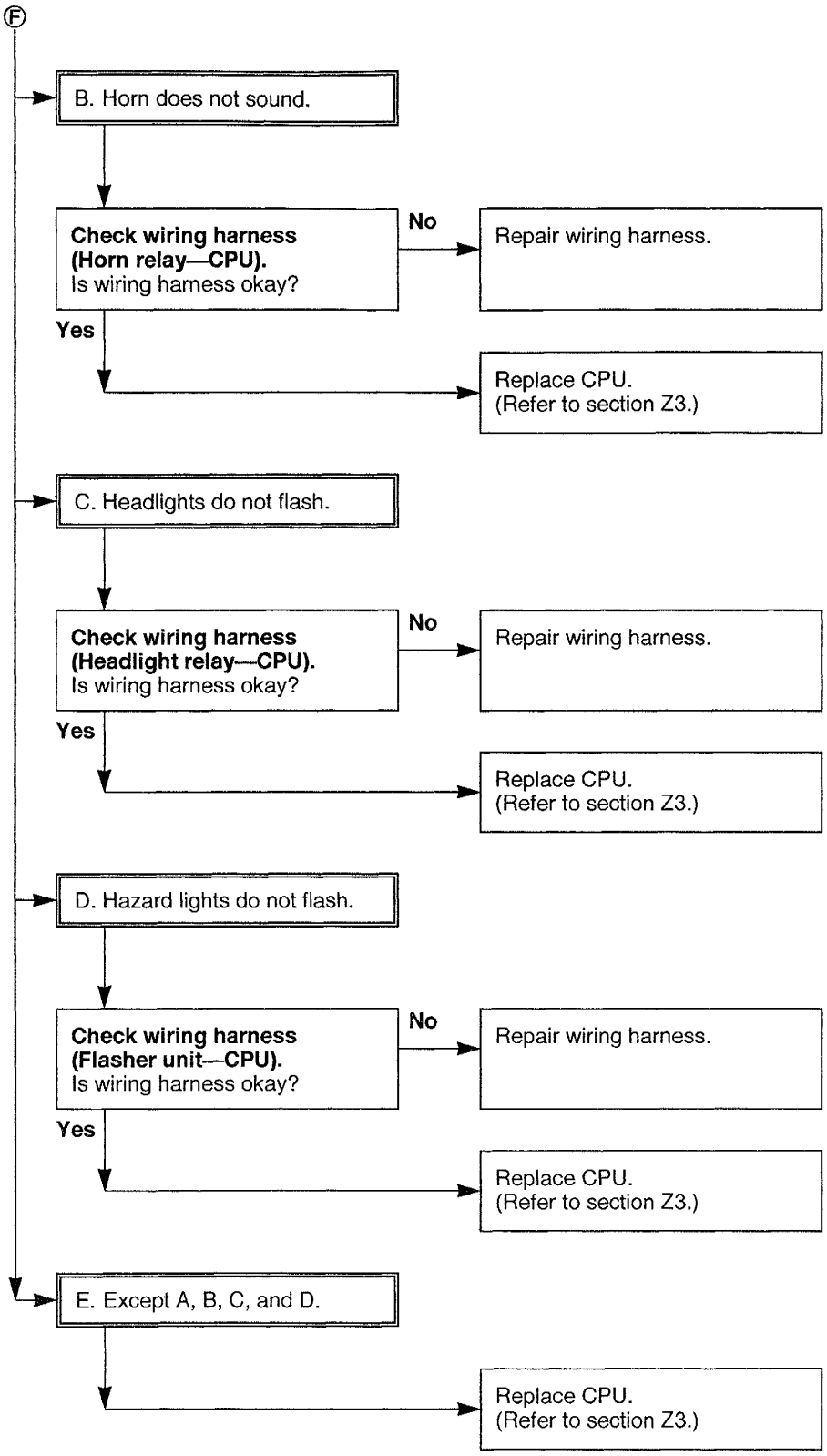
Ⓕ
B. Horn does not sound.
Check wiring harness (Horn relay—CPU). Is wiring harness okay?
No
Repair wiring harness.
Yes
Replace CPU. (Refer to section Z3.)
C. Headlights do not flash.
Check wiring harness (Headlight relay—CPU). Is wiring harness okay?
No
Repair wiring harness.
Yes
Replace CPU. (Refer to section Z3.)
D. Hazard lights do not flash.
Check wiring harness (Flasher unit—CPU). Is wiring harness okay?
No
Repair wiring harness.
Yes
Replace CPU. (Refer to section Z3.)
E. Except A, B, C, and D.
Replace CPU. (Refer to section Z3.)

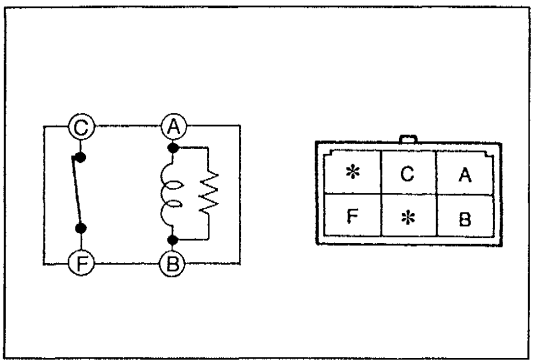

STARTER CUT RELAY

Inspection

1. Remove the starter cut relay.
2. Apply battery positive voltage and check for continuity between the terminals of the starter cut relay.

O–O : Continuity B+: Battery positive voltage

Step \ Terminal	A	B	C	F
1	O	O	O	O
2	B+	GND		

3. If not as specified, replace the starter cut relay.

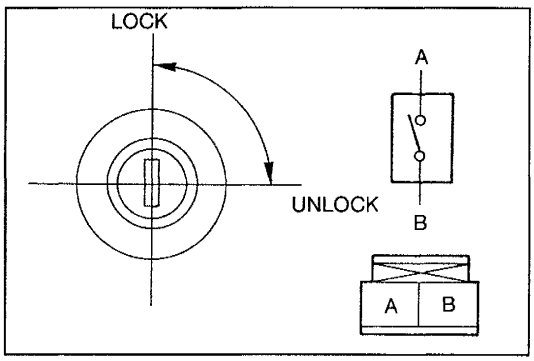

TRUNK KEY CYLINDER SWITCH (Within lock cylinder)

Inspection

1. Remove the trunk lid trim.
   (Refer to the 1996 626/MX-6 Workshop Manual, section S.)
2. Disconnect the trunk key cylinder switch connector.
3. Check for continuity between the terminals of the trunk key cylinder switch.

Cylinder position	Continuity
Lock	No
Unlock	Yes

4. If not as specified, replace the lock cylinder.
   (Refer to the 1996 626/MX-6 Workshop Manual, section S.)

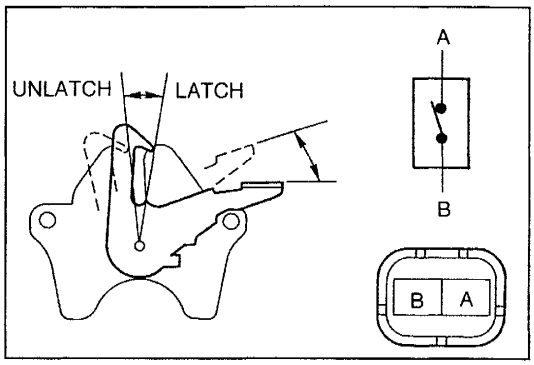

HOOD SWITCH (Within lock assembly)

Inspection

1. Disconnect the hood switch connector.
2. Check for continuity between the terminals of the hood switch.

Lever position	Continuity
Unlatch	Yes
Latch	No

3. If not as specified, replace the lock assembly.
   (Refer to the 1996 626/MX-6 Workshop Manual, section S.)

Before beginning any service procedure, refer to section S of this manual for air bag system service warnings.

HORN

HORN

STRUCTURAL VIEW

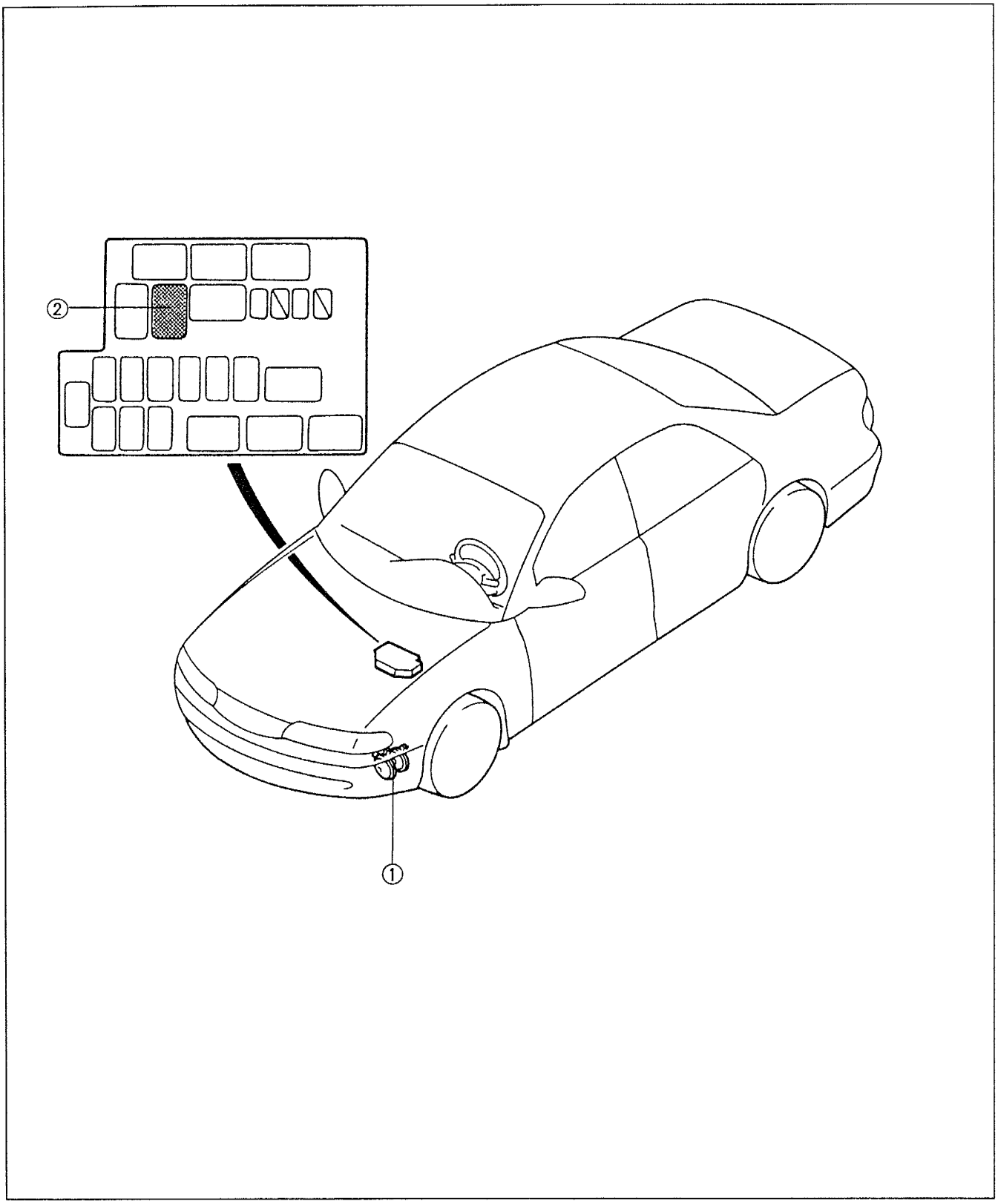

1. Horn
   - Removal / Installation ..... page T4–3
   - On-vehicle Inspection .....page T4–3
2. Horn relay
   - Inspection ..... page T4–3

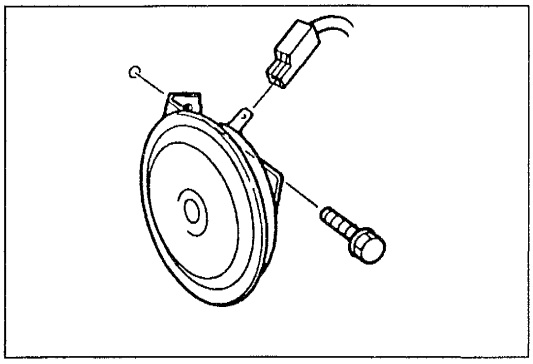

HORN

Removal / Installation

1. Remove the front bumper.
   (Refer to the 1996 626/MX-6 Workshop Manual, section S.)
2. Disconnect the horn connector.
3. Remove the bolt and the horn.
4. Install in the reverse order of removal.

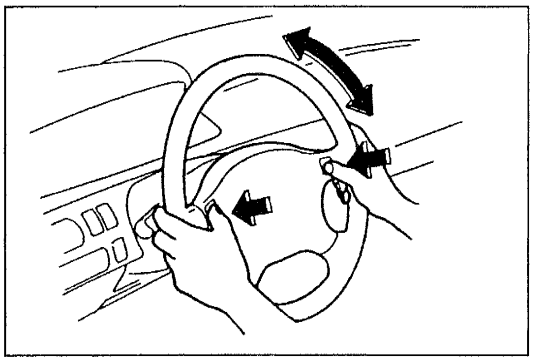

On-vehicle Inspection

While turning the steering wheel, verify that the horn sounds when the horn switch is pressed.

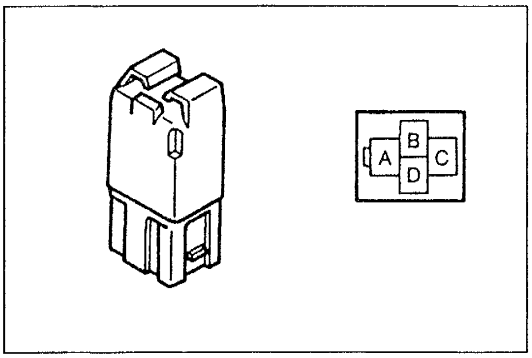

HORN RELAY

Inspection

1. Remove the horn relay.
2. Apply battery positive voltage and check for continuity between the relay terminals.

O–O : Continuity B+: Battery positive voltage

	Terminal			
Step	B	D	A	C
1	O–O			
2	B+	GND	O–O	

3. If not as specified, replace the horn relay.

COMMON CONNECTORS

X-1 ■ COMMON CONNECTOR LIST (1/4)

() ATX X CANADA
X1 CANADA 626
<> KL ◇ FS MTX

X-01 MAIN FUSE BLOCK (E)

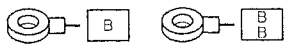

X-02 FRONT (F) -ENGINE (E)

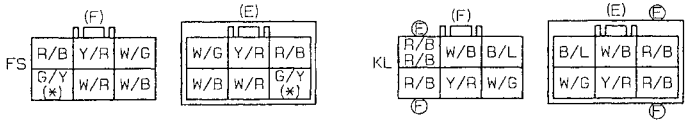

X-03 IGNITION SWITCH (F)

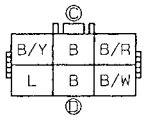

X-04 MAIN FUSE BLOCK (F)

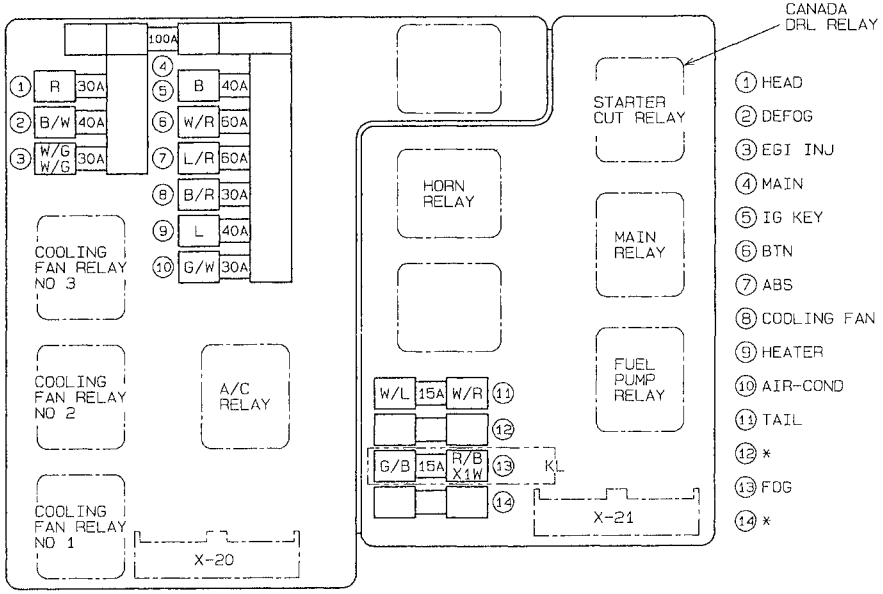

NOTE THIS IS THE CONNECTOR AS SEEN FROM THE TERMINAL SIDE

X-05 FRONT (F) -EMISSION (EM)

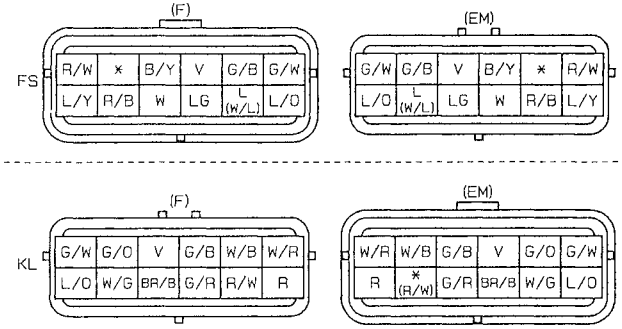

X-06 FRONT (F) -EMISSION (EM)

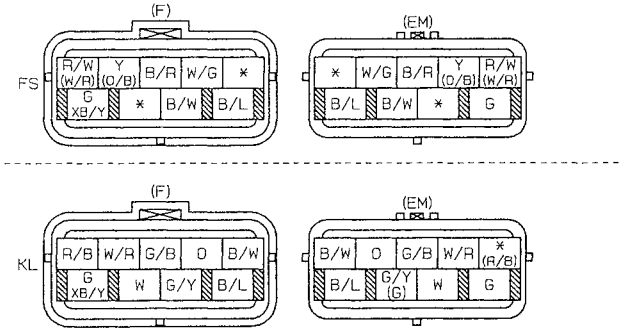

X-07 FRONT (F) -INSYRUMENT PANEL (I)

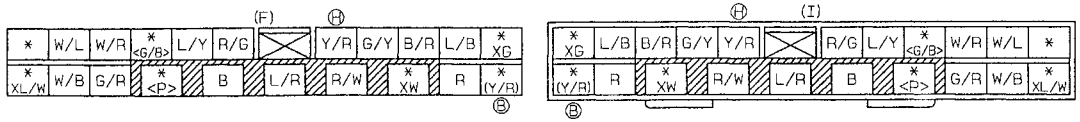

X-08 FRONT (F) -REAR (R)

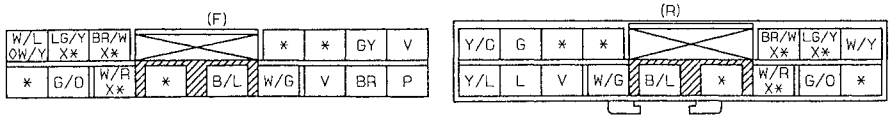

X-2 ■ COMMON CONNECTOR LIST (2/4)

() . . . ATX ※. . . . CANADA
●. . . . MX-6 O. . . . FS ATX
<>. . . KL

X-09 EMISSION (EM) -ENGINE (E)

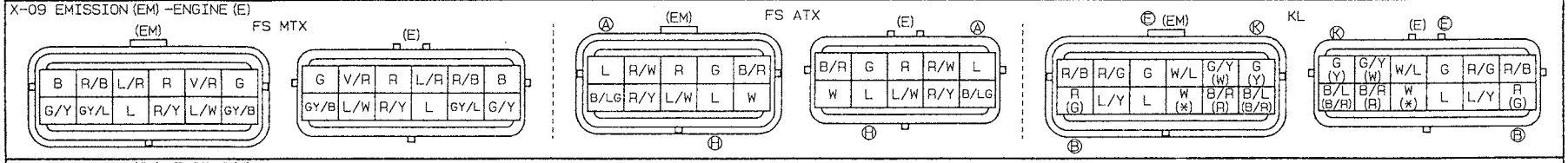

X-10 EMISSION (EM) -ENGINE (E)

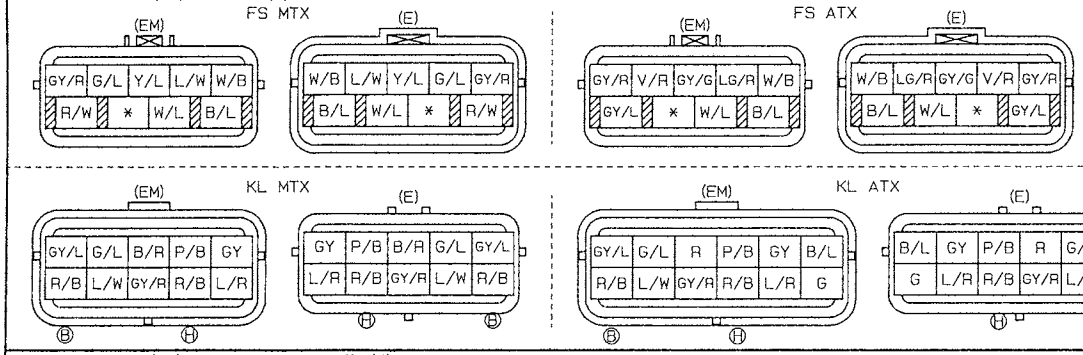

X-11 EMISSION (EM) -INSTRUMENT PANEL (I)

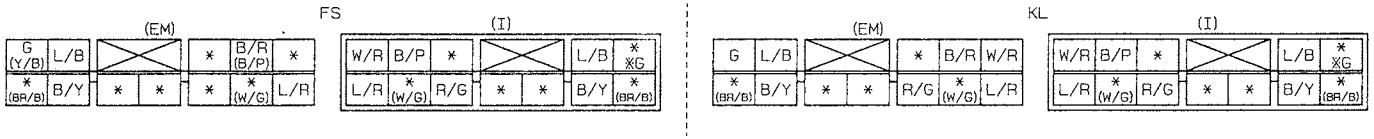

X-12 EMISSION (EM) -INSTRUMENT PANEL (I)

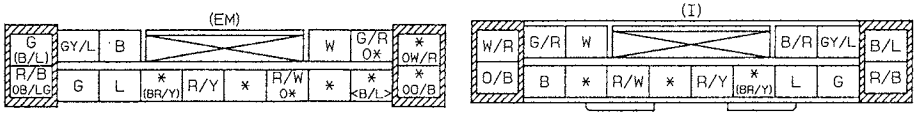

X-13 INSTRUMENT PANEL (I) -REAR (R)

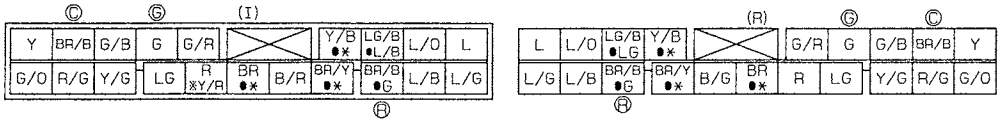

X-3 ■ COMMON CONNECTOR LIST (3/4)

() ATX X CANADA ◇ FS MTX
■ WITH KEYLESS ENTRY SYSTEM
■1 WITH TRUNK LID OPENER

X-14 REAR (R) -DOOR NO 1 (DR1)

626

(R)

L/W	Y/B	G/B	*	Y/R
Y/W	BR/Y	L/G	L	R/W
B	*	B	*	L/R
W/R	G/Y	BR	B/L	*
*■G	*■L	*	B/R	
G/W	W/Y			

(DR1)

Y/R	*	G/B	Y/B	L/W
R/W	L	L/G	BR/Y	Y/W
L/R	*	B	*	B
*	B/L	BR	G/Y	W/R
B/R	*	*■L	*■G	
W/Y	G/W			

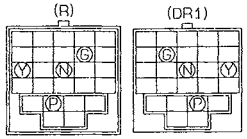

MX-6

(R)

*	LG/B	*■G/B	*	Y/R
*	BR/B	L/G	L	R/W
*	BR	B	*	*
L/W	*	*	B/L	L/R
B	*■G	G/B■L	B/R	
W/Y	G/W			

(DR1)

Y/R	*	*■G/B	LG/B	*
R/W	L	L/G	BR/B	*
*	*	B	BR	*
L/R	B/L	*	*	L/W
B/R	G/B■L	*■G	B	
G/W	W/Y			

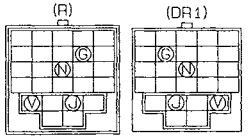

X-15 REAR (R) -DOOR NO 2 (DR2)

626

(R)

*	LG/B	*	BR/Y	Y/R
*	BR/B	L/B	L/O	R/W
*	BR	*	*	*
B	*	*	B/L	L/R
G	R	*	B/R	
G/W	W/Y			

(DR2)

Y/R	BR/Y	*	LG/B	*
R/W	L/O	L/B	BR/B	*
*	*	*	BR	*
L/R	B/L	*	*	B
B/R	*	R	G	
W/Y	G/W			

MX-6

(R)

*	LG/B	*	BR/Y	Y/R
*	BR/B	L/B	L/O	R/W
*	BR	*	*	*
*	*	*	B/L	L/R
B	R	G	B/R	
G/W	W/Y			

(DR2)

Y/R	BR/Y	*	LG/B	*
R/W	L/O	L/B	BR/B	*
*	*	*	BR	*
L/R	B/L	*	*	*
B/R	G	R	B	
W/Y	G/W			

X-16 REAR (R) -DOOR NO 3 (DR3)

(R)

B	BR/Y
*	*
*	*
*	*
Y/W	L/W
*	B/R
G	R

(DR3)

BR/Y	B
*	*
*	*
*	*
L/W	Y/W
B/R	*
R	G

X-17 REAR (R) -DOOR NO 4 (DR4)

(R)

B	BR/Y
*	*
*	*
*	*
W/R	G/Y
*	B/R
G	R

(DR4)

BR/Y	B
*	*
*	*
*	*
G/Y	W/R
B/R	*
R	G

X-18 REAR (R) -REAR NO 2 (R2)

626

(R)

W/G		B
LG/R ■1G/W	* R/Y	O

(R2)

B		W/G
O	R/Y *	LG/R

MX-6

(R)

B	B	LG/R	W/G
Ⓐ	Ⓑ		

(R2)

B/G	B/G	B	B
		Ⓑ	Ⓐ

X-19 INSTRUMENT PANEL (I) -ILLUMINATION LIGHT (IL)

Ⓐ (I)

O		L/W
O	GY GY	B
Ⓑ	Ⓓ Ⓕ	

(IL) Ⓐ

L/W		R/B
B	G/Y G/Y	R/B
Ⓕ	Ⓓ	Ⓑ

X-20 JOINT CONNECTOR (F)

B/W	B/W	B/W ◇*	B/W

X-21 JOINT CONNECTOR (F)

FS MTX

B/W X*	B/W	B/W	B/W

FS ATX, KL

R/B	R/B	R/B	R/B

X-22 JOINT CONNECTOR (EM)

FS

Y/L (B/R)	Y/L (*)	B/R (B/P)	B/R (B/P)
B/R (B/P)	B/R (B/P)	Y/L (B/R)	Y/L (B/R)

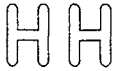

KL

*	B/R	B/L	B/R (*)
B/R	B/R	B/R	B/R

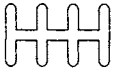

X-4 ■ COMMON CONNECTOR LIST (4/4)

() .ATX X . CANADA
♦....WITH FRONT FOG LIGHTS

X-23 FRONT (F) -AIR BAG (AB)

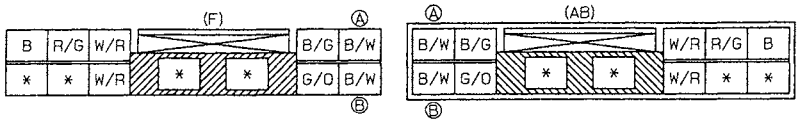

X-24 JOINT CONNECTOR (I)

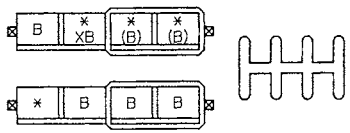

X-25 JOINT CONNECTOR (I)

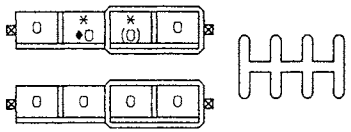

X-26 JOINT CONNECTOR (I)

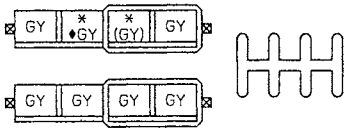

X-27 EMISSION (EM) -ENGINE (E)

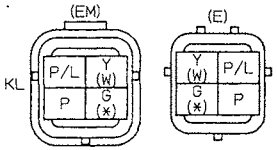

X-28 JOINT CONNECTOR (R)

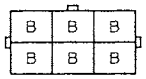

JOINT BOX

INTER CONNECTOR DIAGRAM OF JOINT BOX

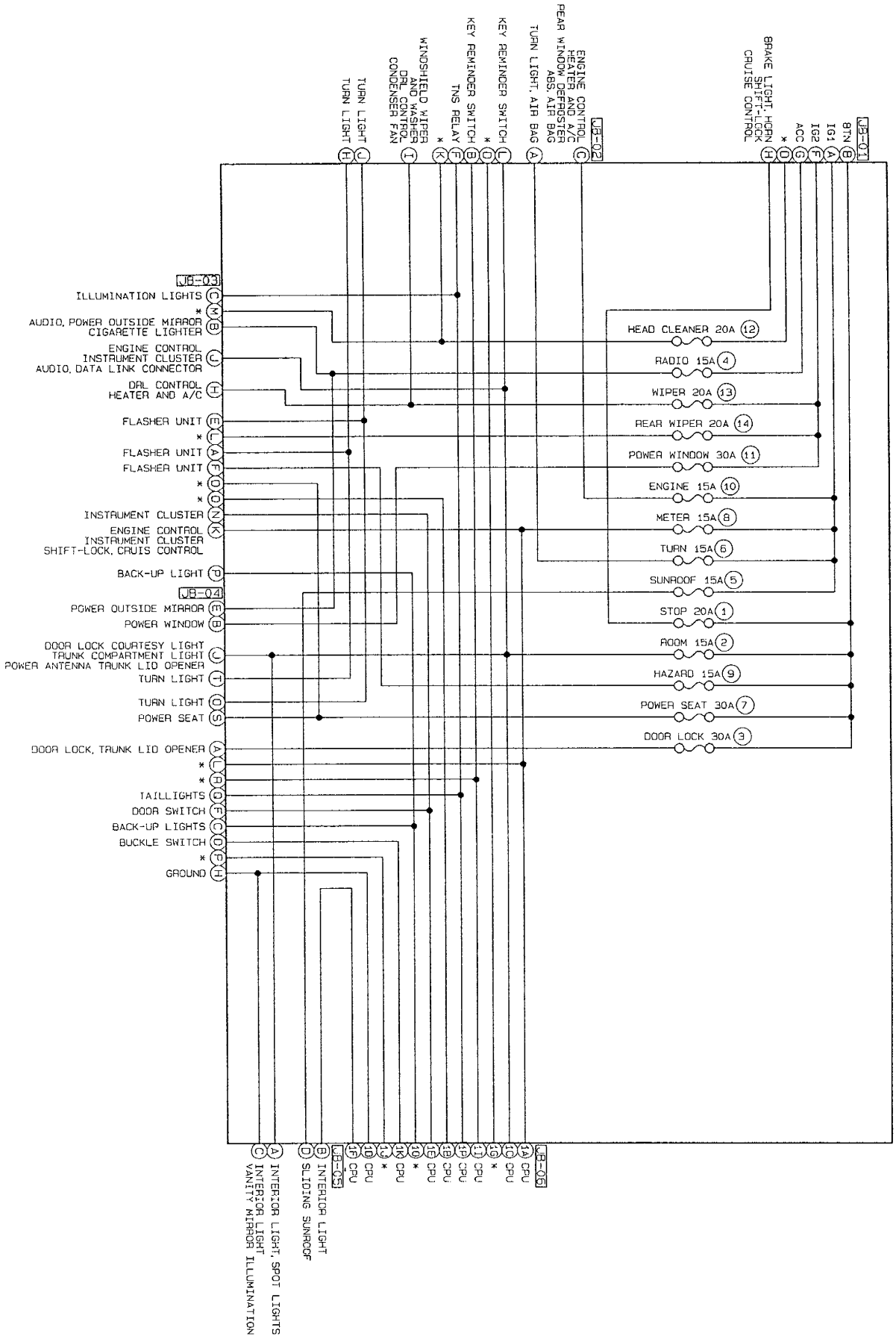

■ JOINT BOX

MX-6

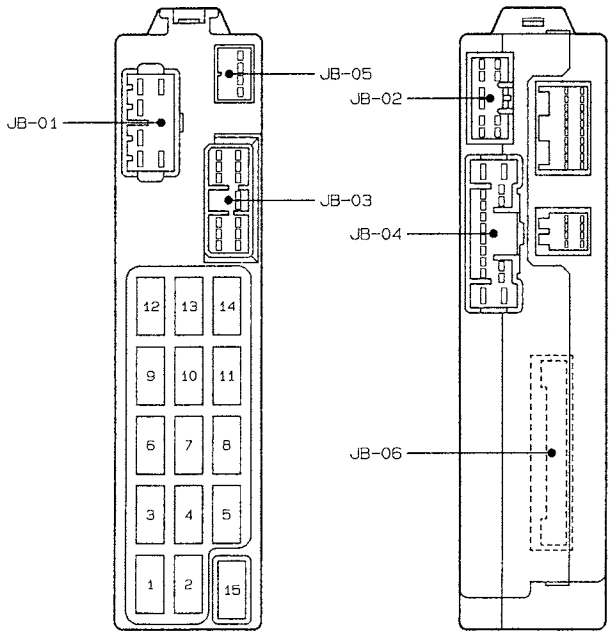

JB-01 FRONT HARNESS (F)

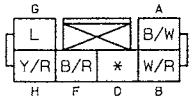

JB-02 FRONT HARNESS (F)

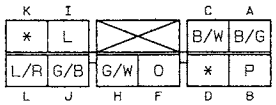

JB-03 INSTRUMENT PANEL HARNESS (I)

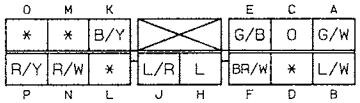

JB-04 REAR HARNESS (R)

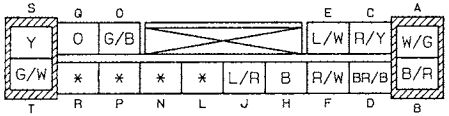

JB-05 INTERIOR LIGHT HARNESS (IN)

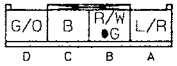

JB-06 JOINT BOX-CENTRAL PROCESSING UNIT

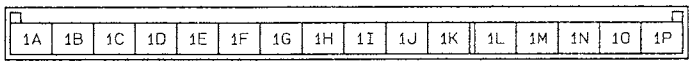

①	STOP	20A
②	ROOM	15A
③	DOOR LOCK	30A
④	RADIO	15A
⑤	SUNROOF	15A
⑥	TURN	15A
⑦	POWER SEAT	30A
⑧	METER	15A
⑨	HAZARD	15A
⑩	ENGINE	15A
⑪	POWER WINDOW	30A
⑫	HEAD CLEANER	20A
⑬	WIPER	20A
⑭	REAR WIPER	20A
⑮	SPAPE	15A

Printed in U.S.A.
1493-10-95F

Part No.9999-95-084F-96